ROADWAY FUNCTIONAL CLASSIFICATIONS					
	Alley	Local Access	Arterial		
			Principal	Minor	Collector
Maximum Number of Dwelling Unit Serviced (2)	40	100	n/a	>100	>100
Min. ROW-ft	20 (4)	51	68 (3)	68 (3)	68
Min. Pavement Width-ft	20 (4)	28	45 (3)	45 (3)	45
Sidewalks-ft	n/a	5' one side (3)	5' both sides (3)	5' both sides (3)	5' both sides (3)
Bike Lane width-ft	n/a	Share with other vehicles	5' in each direction	5' in each direction	5' in each direction
Geometrics and Structural Sections	See Std. Dwg. No. 311	See Std. Dwg. No. 310	See Std. Dwg. No. 305	See Std. Dwg. No. 306	See Std. Dwg. No. 307
Max. Grade, % (1)	15%	15%	12%	15%	15%
Utility easement Beyond ROW req'd	n/a	10' both sides	10' both sides	10' both sides	10' both sides
Number of lanes	2	min. 2	2-7	2-5	min. 2
Parking	not permitted	Permitted (on one side) (3)	not permitted	Permitted where applicable (3)	Permitted where applicable (3)
Pavement Markings	n/a	Based on Engineering judgments	Edge line, lane line and center line (3)	Edge line, lane line and center line (3)	Edge line, lane line and center line (3)

THIS TABLE APPLIES EXCEPT AS IDENTIFIED ON STANDARD DETAIL D300.

NOTES:

1. Maximum grade may be exceeded subject to approval by the Director and Fire Marshal. Such approval may be conditional upon the following:
   a) No practical alternative exists.
   b) Any grade over 15% will be reviewed by the City on a case by case basis.
2. Maximum potential number of dwelling units serviced will include FORECASTED future development of adjacent areas.
3. Based on Engineering judgments.
4. 20 feet for new alleys, 16 feet for existing alleys.

City of Bothell™	**City of Bothell** **PUBLIC WORKS DEPARTMENT**	Approved By: City Engineer	ROADWAY FUNCTIONAL CLASSIFICATION	Standard Detail **300** Revision Date Dec, 2016

Commercial / Multi Family Driveway		
	Residential Driveway	Commercial / Multifamily Driveway
Maximum Number of Dwelling Unit Serviced (2)	2	3-4
Min. Tract/ROW-ft	21 (3)	25 (3)
Min. Pavement Width-ft	16	20
Sidewalks-ft	n/a	n/a
Bike Lane width-ft	n/a	n/a
Geometrics and Structural Sections	See Std. Dwg. No. 301	See Std. Dwg. No. 302
Max. Grade, % (1)	15%	15%
Utility easement Beyond ROW req'd	as required to serve area	as required to serve area
Number of lanes	2	2
Parking	not permitted	not permitted
Pavement Markings	n/a	n/a

NOTES:

1. Maximum grade may be exceeded subject to approval by the Director and Fire Marshal. Such approval may be conditional upon the following:
   a) No practical alternative exists.
   b) Any grade over 15% will be reviewed by the City on a case by case basis.

2. Maximum potential number of dwelling units serviced will include FORECASTED future development of adjacent areas.

3. Alleys can have a private tract or public ROW as underlying property.

City of Bothell™	**City of Bothell** **PUBLIC WORKS DEPARTMENT**	Approved By: City Engineer	PRIVATE ROADWAY FUNCTIONAL CLASSIFICATIONS	Standard Detail **300A** Revision Date Dec, 2016

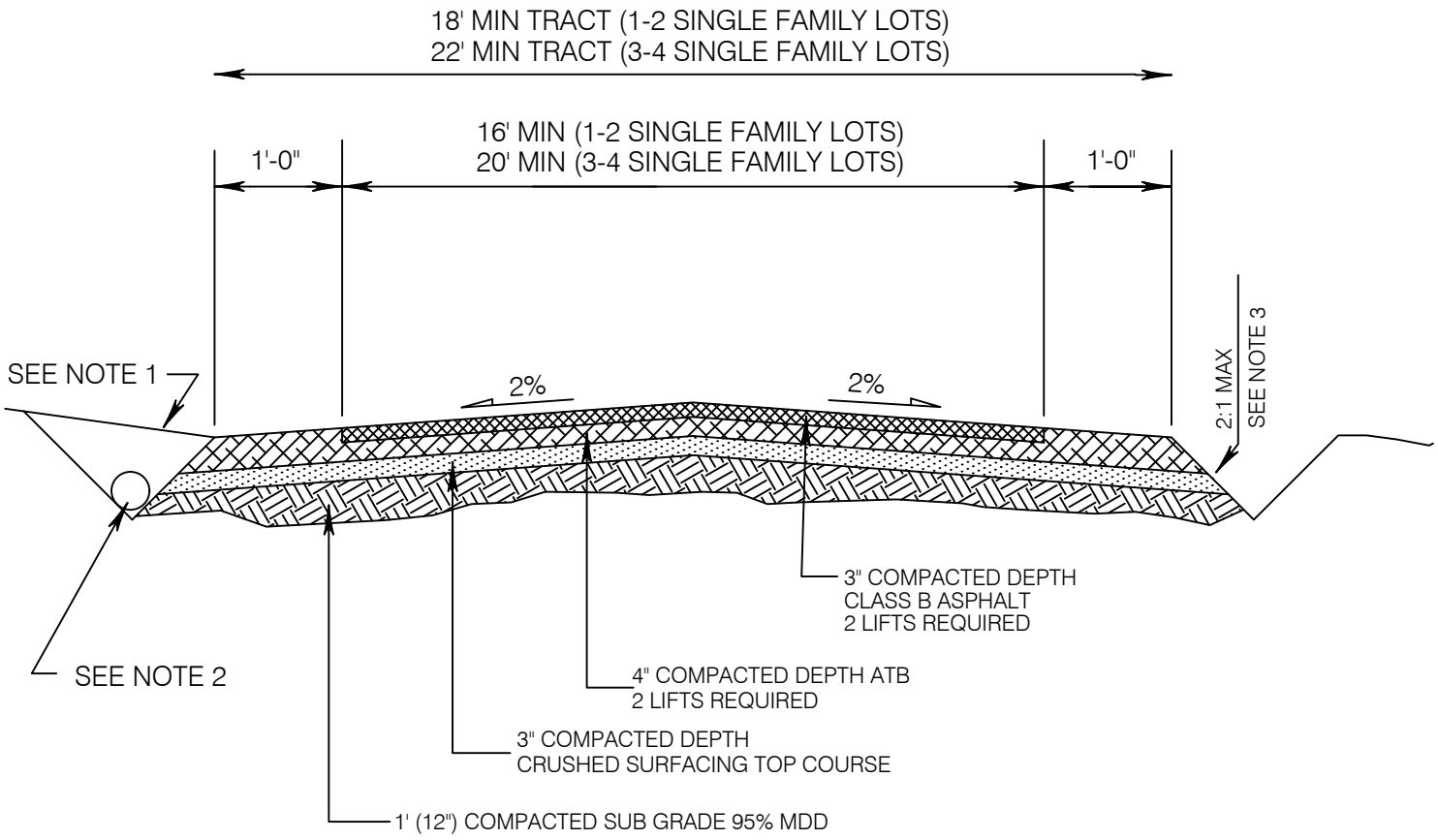

NOTES:

1. DRIVEWAY GRADE SHALL CONFORM TO SECTION 3 UNLESS OTHERWISE APPROVED BY DIRECTOR

2. A 12 INCH MINIMUM CONCRETE OR CORRUGATED POLYETHYLENE SMOOTH INTERIOR PIPE IS REQUIRED UNDER ALL DRIVEWAYS. COVER OVER PIPE SHALL CONFORM TO THE PIPE MANUFACTURER'S RECOMMENDATIONS.

3. SLOPE EASEMENTS MAY BE REQUIRED

4. THE 2'-6" AREA SHALL BE FREE OF OBSTRUCTIONS.

City of Bothell™

City of Bothell

PUBLIC WORKS DEPARTMENT

Approved By:

City Engineer

RESIDENTIAL DRIVEWAY

Standard Detail

301

Revision Date

Dec, 2016

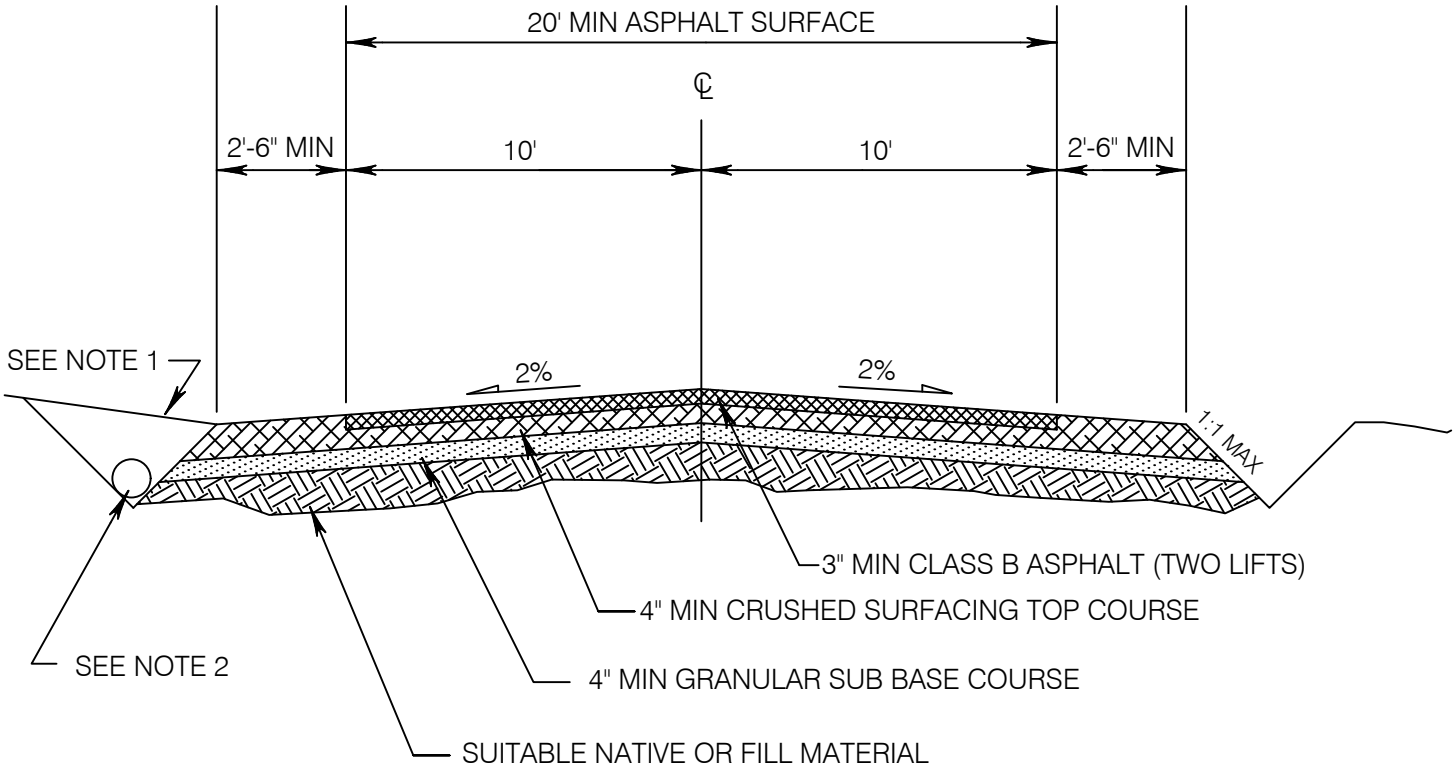

NOTES:

1. DRIVE GRADE SHALL CONFORM TO SECTION 3 UNLESS OTHERWISE APPROVED BY DIRECTOR

2. A 12 INCH MINIMUM CONCRETE OR CORRUGATED POLYETHYLENE SMOOTH INTERIOR PIPE IS REQUIRED UNDER ALL DRIVEWAYS. COVER OVER PIPE SHALL CONFORM TO THE PIPE MANUFACTURER'S RECOMMENDATIONS.

3. SLOPE EASEMENTS MAY BE REQUIRED.

4. THE 2'-6" AREA SHALL BE FREE OF OBSTRUCTIONS.

City of Bothell™	**City of Bothell** **PUBLIC WORKS DEPARTMENT**	Approved By: City Engineer	COMMERCIAL/ MULTIFAMILY DRIVEWAY	Standard Detail **302** Revision Date Dec, 2016

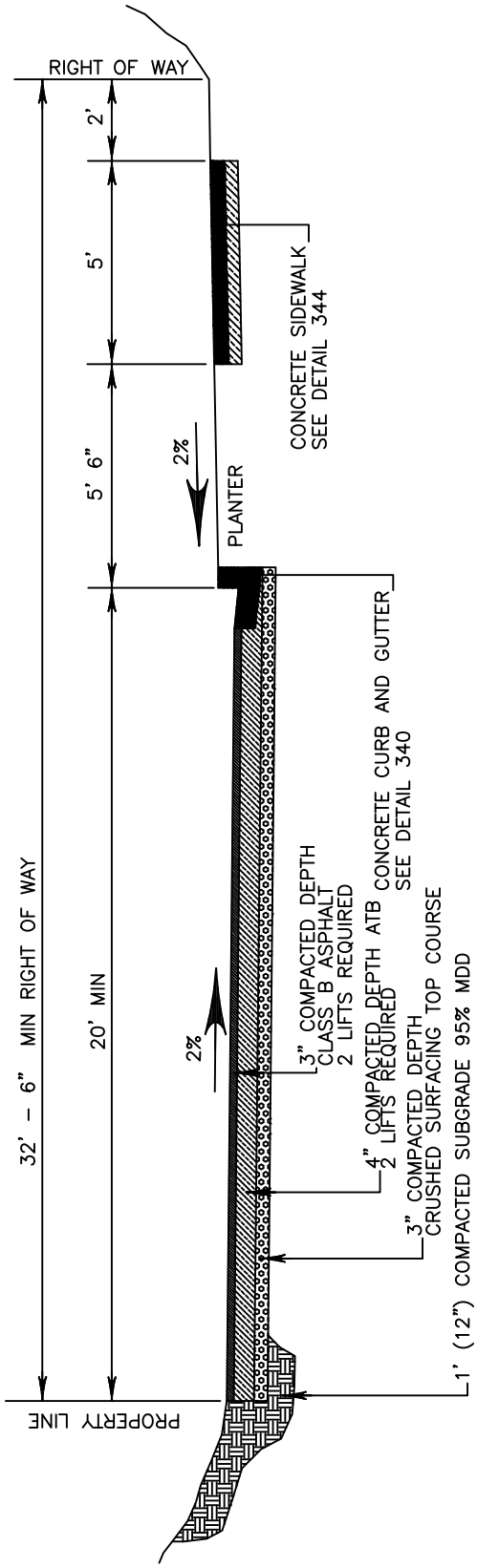

CURB SECTION

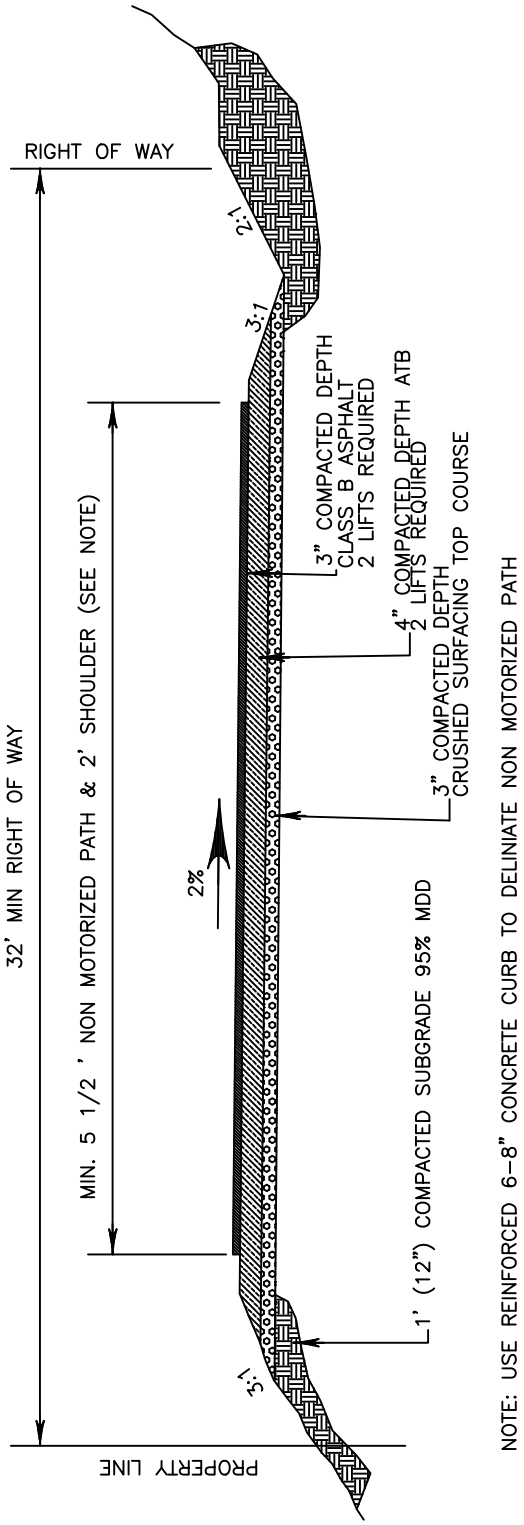

NOTE: USE REINFORCED 6–8" CONCRETE CURB TO DELINIATE NON MOTORIZED PATH

SHOULDER SECTION

City of Bothell	**City of Bothell** **PUBLIC WORKS DEPARTMENT**	Approved By: City Engineer	TYPICAL MINIMUM HALF STREET SECTION	Standard Detail **303** Revision Date Feb, 2012

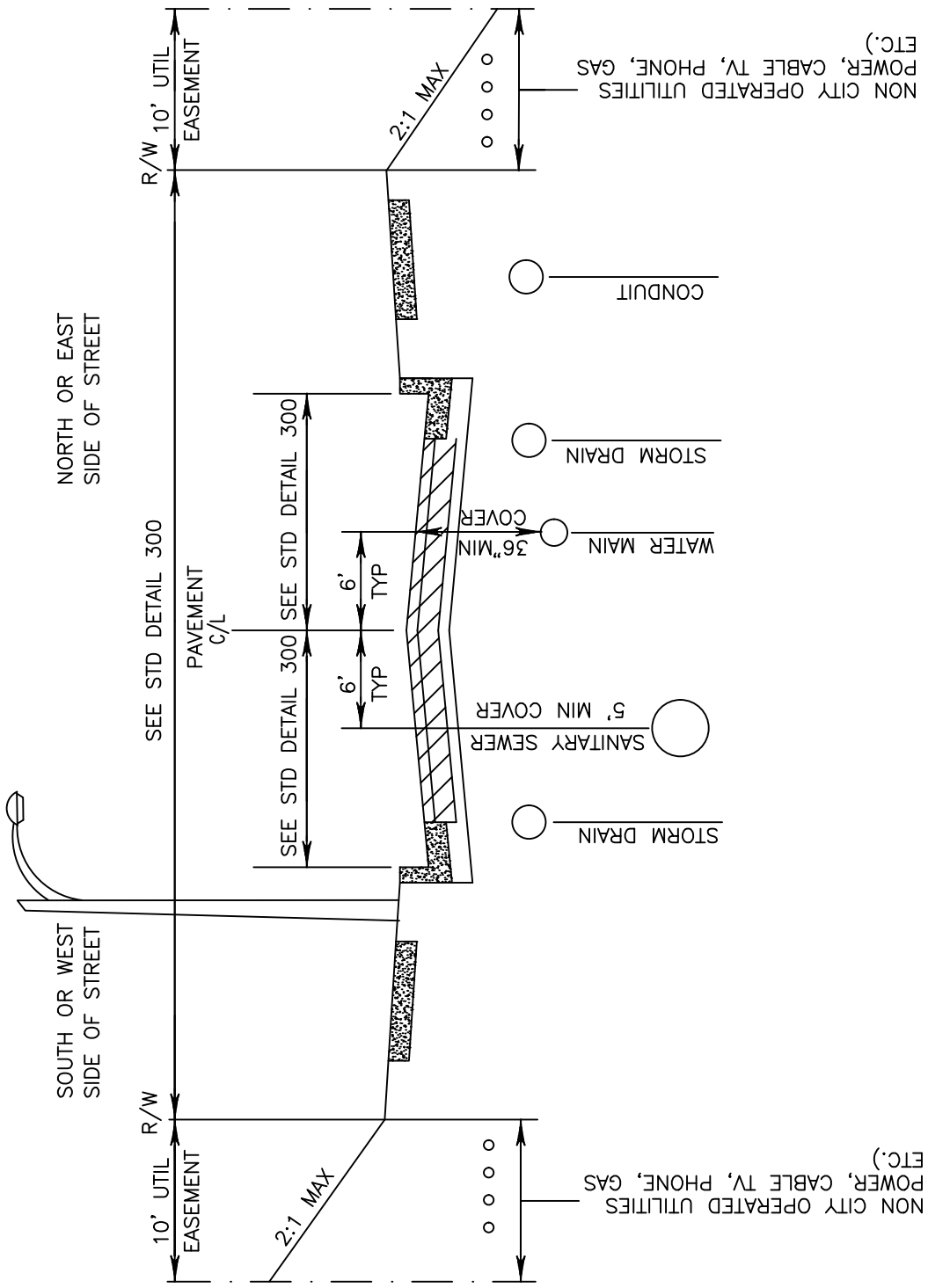

NOTES:

1. 5' MIN VERTICAL AND 10' MIN HORIZONTAL SEPARATION BETWEEN PUBLIC UTILITIES OR FROM PRIVATE UTILITIES.
2. MIN SEPARATION REQUIREMENTS FROM PUBLIC UTILITIES APPLY WITHIN EASEMENTS AND PRIVATE PROPERTY.
3. CONDUIT APPLIES TO COLLECTOR STREETS OR ABOVE WITHIN THE LIMITS OF LANDSCAPE STRIP.

City of Bothell	**City of Bothell** **PUBLIC WORKS DEPARTMENT**	Approved By: City Engineer	TYPICAL PUBLIC UTILITY LOCATION	Standard Detail **304** Revision Date Feb, 2012

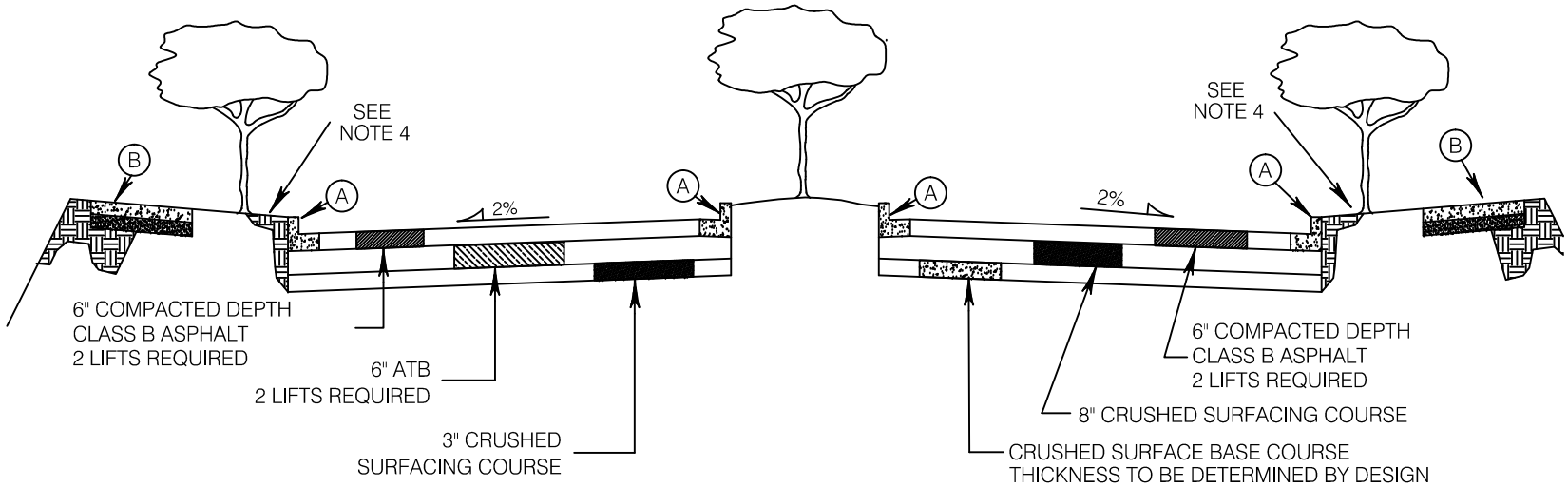

STANDARD PAVEMENT SECTION

LEFT SIDE (RIGHT SIDE TO BE MIRROR IMAGE)

ALTERNATE PAVEMENT SECTION

RIGHT SIDE (LEFT SIDE TO BE MIRROR IMAGE)

NOTES:

1 BOULEVARD TURN LANE OR RAISED MEDIAN
2 SLOPE EASEMENTS MAY BE REQUIRED (TYPICAL)
3 5' BIKE LANE
4 SEE STREET TREE LOCATION DETAIL 363
5 NO PARKING ON PRINCIPAL ARTERIALS
6 12 FT WIDTH IF ONE LANE, IF MORE THAN ONE LANE, 11 FT WIDTH PER LANE

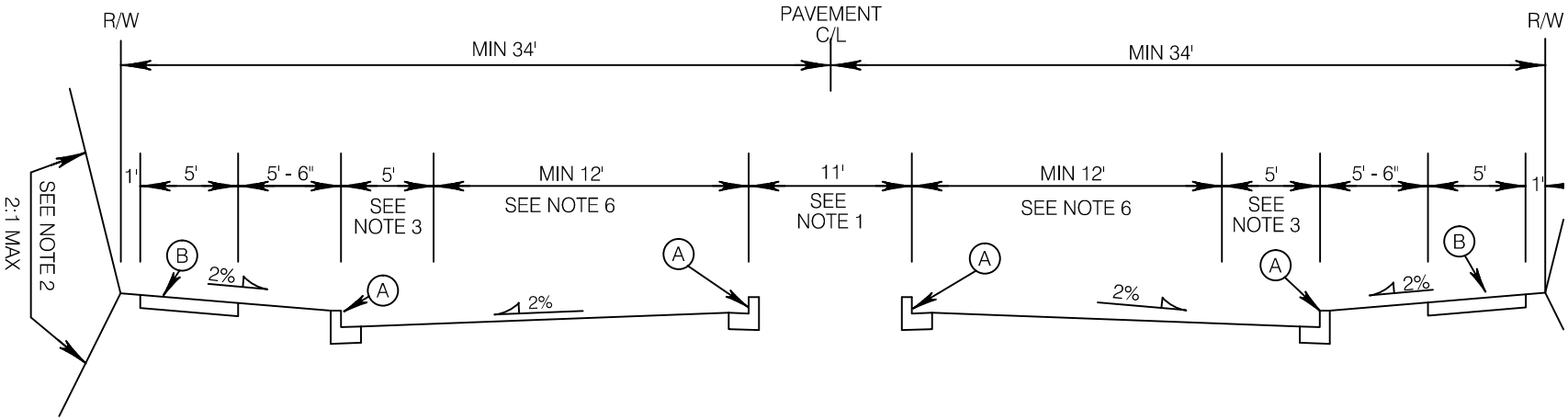

(A) CONCRETE CURB AND GUTTER, SEE STD DETAIL 340

(B) CONCRETE SIDEWALK, SEE STD DETAIL 344

City of Bothell

City of Bothell

PUBLIC WORKS DEPARTMENT

Approved By:

City Engineer

TYPICAL ROADWAY SECTION
PRINCIPAL ARTERIAL

Standard Detail

305

Revision Date
Jun, 2015

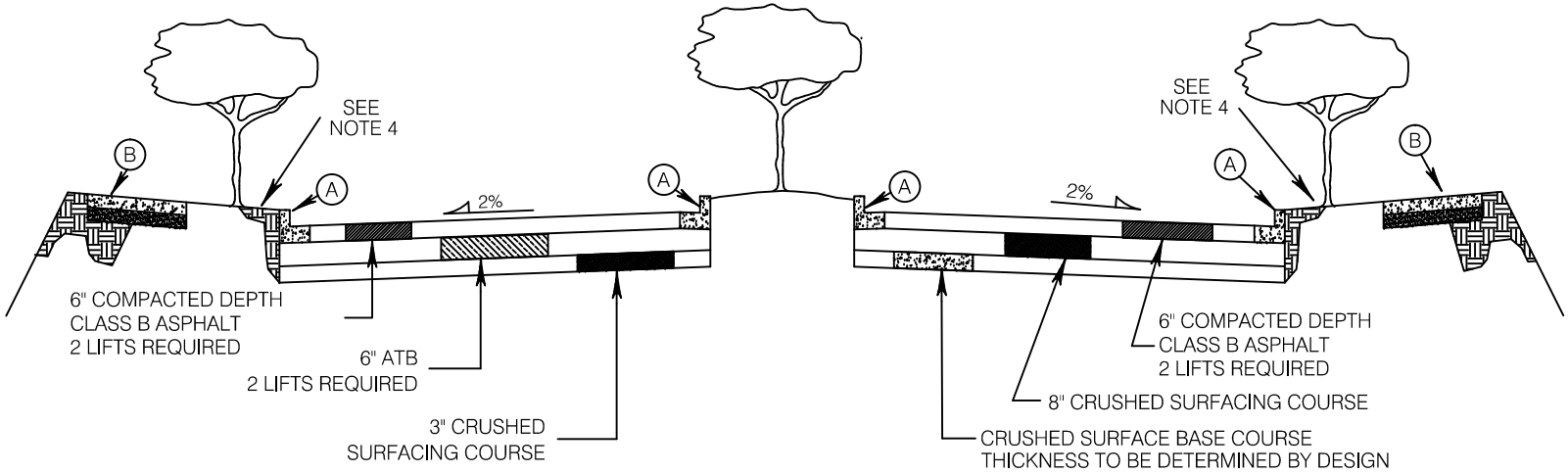

STANDARD PAVEMENT SECTION

LEFT SIDE (RIGHT SIDE TO BE MIRROR IMAGE)

ALTERNATE PAVEMENT SECTION

RIGHT SIDE (LEFT SIDE TO BE MIRROR IMAGE)

NOTES:

1 BOULEVARD TURN LANE OR RAISED MEDIAN
2 SLOPE EASEMENTS MAY BE REQUIRED (TYPICAL)
3 5' BIKE LANE
4 SEE LANDSCAPE DETAIL 363
5 NO PARKING ON ARTERIALS
6 12 FT WIDTH IF ONE LANE, IF MORE THAN ONE LANE, 11 FT WIDTH PER LANE

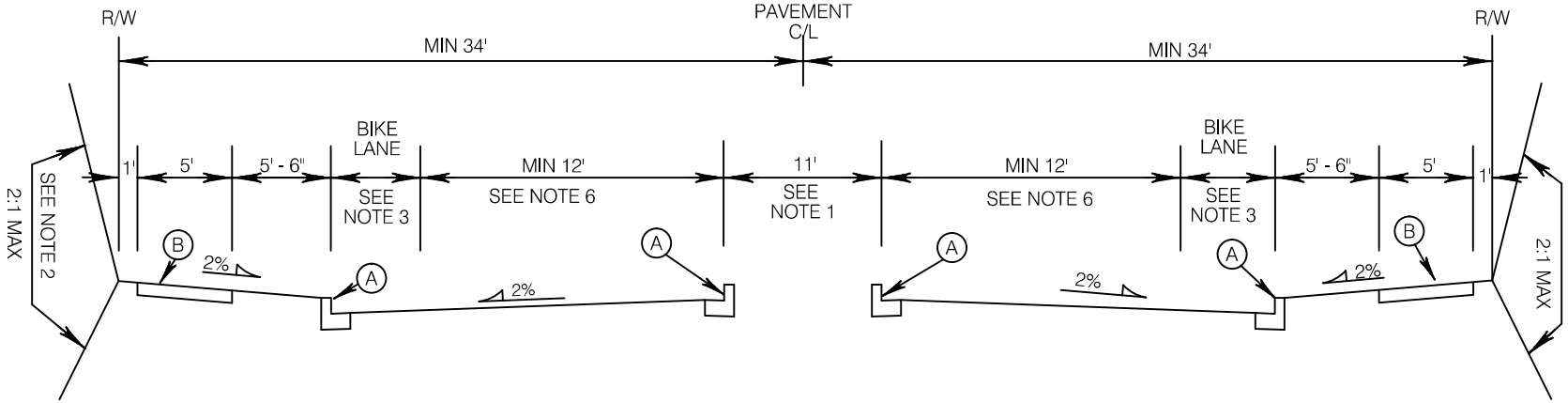

(A) CONCRETE CURB AND GUTTER , SEE STD DETAIL 340

(B) CONCRETE SIDEWALK, SEE STD DETAIL 344

City of Bothell

City of Bothell

PUBLIC WORKS DEPARTMENT

Approved By:

City Engineer

TYPICAL ROADWAY SECTION MINOR ARTERIAL

Standard Detail

306

Revision Date

Jun, 2015

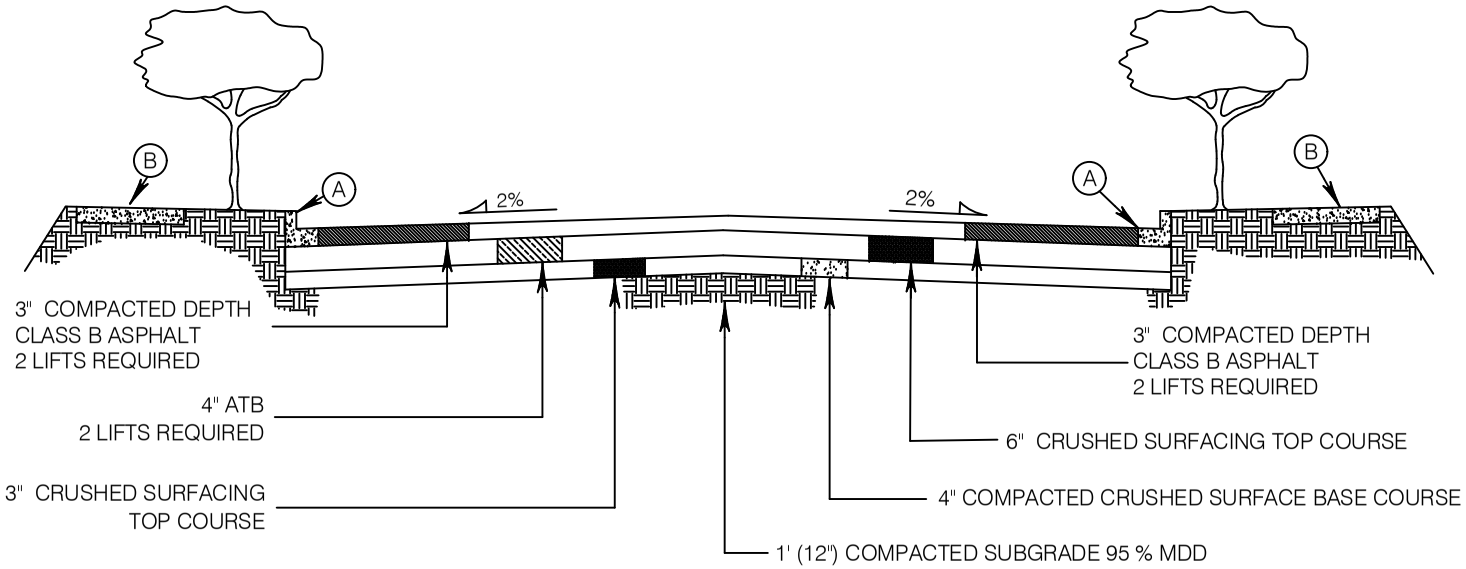

STANDARD PAVEMENT SECTION

LEFT SIDE (RIGHT SIDE TO BE MIRROR IMAGE)

ALTERNATE PAVEMENT SECTION

RIGHT SIDE (LEFT SIDE TO BE MIRROR IMAGE)

NOTES:

1. SLOPE EASEMENTS MAY BE REQUIRED (TYPICAL)
2. SEE LANDSCAPE DETAIL 363
3. AN ADDITIONAL 7'-6" OF R/W WILL BE NEEDED IF ON-STREET PARKING IS PROVIDED

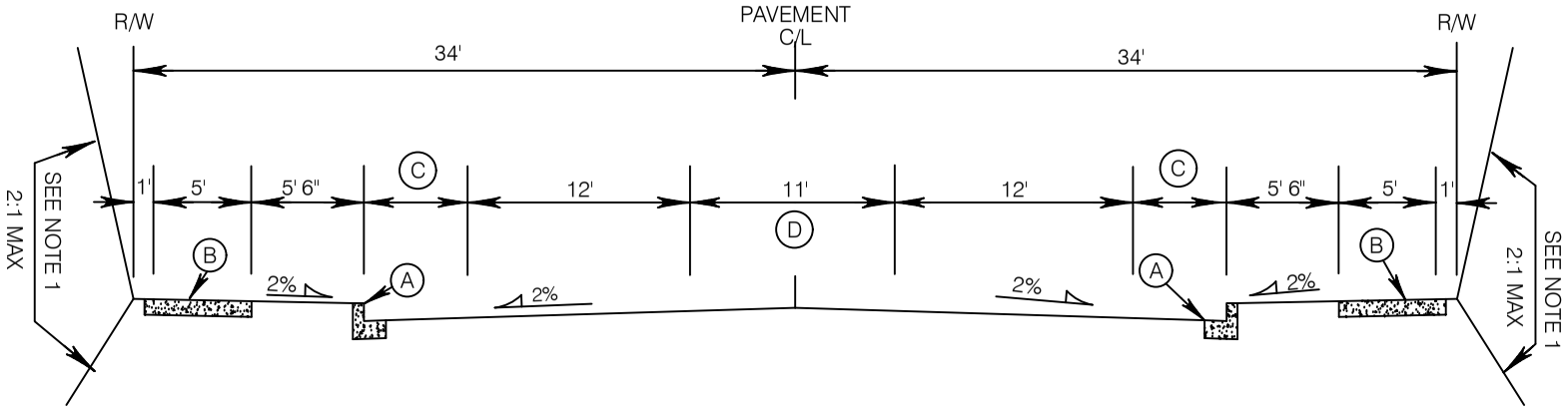

(A) CONCRETE CURB AND GUTTER, SEE STD DETAIL 340

(B) CONCRETE SIDEWALK, SEE STD DETAIL 344

(C) 5' BIKE LANE

(D) TWO WAY LEFT TURN LANE

City of Bothell™

City of Bothell

PUBLIC WORKS DEPARTMENT

Approved By:

City Engineer

TYPICAL ROADWAY SECTION COLLECTOR ARTERIAL

Standard Detail

307

Revision Date

Dec, 2016

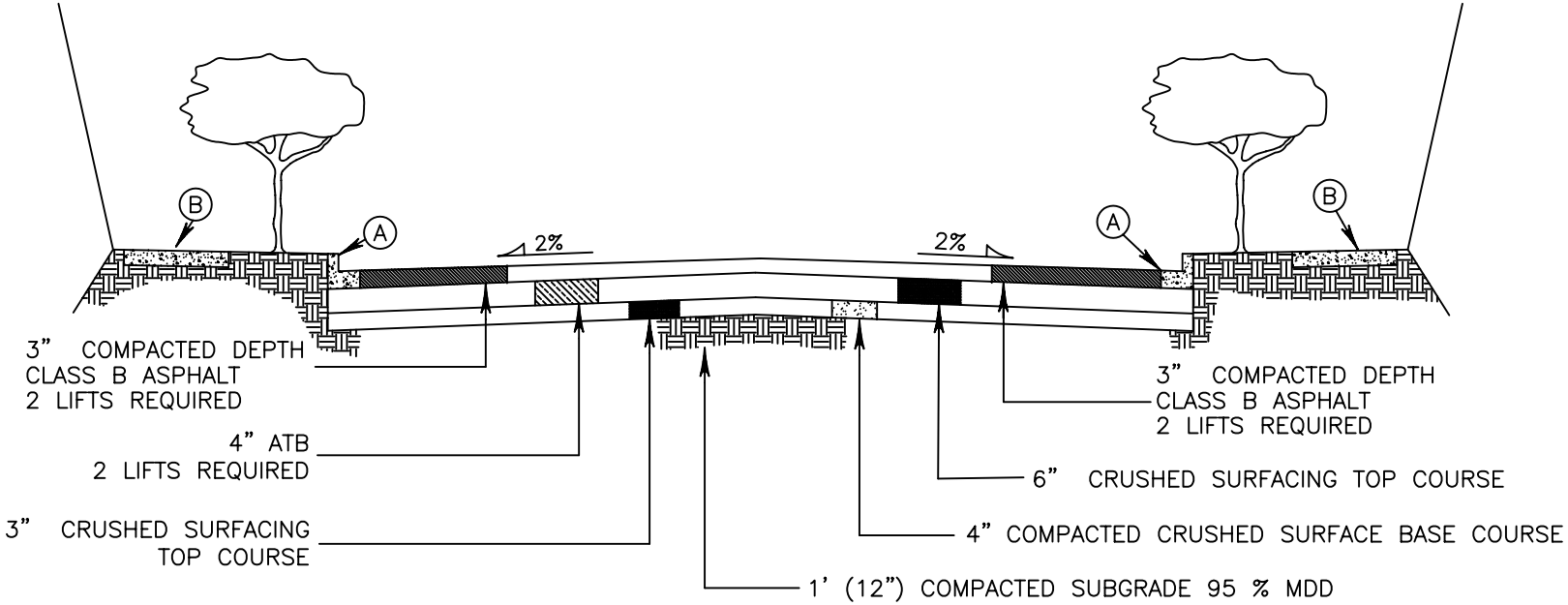

STANDARD PAVEMENT SECTION

ALTERNATE PAVEMENT SECTION

NOTES:

1 SLOPE EASEMENTS MAY BE REQUIRED (TYPICAL)
2 SEE LANDSCAPE DETAILS 362 AND 363
3 AN ADDITIONAL 8'–6" OF R/W WILL BE NEEDED IF ON–STREET PARKING IS PROVIDED

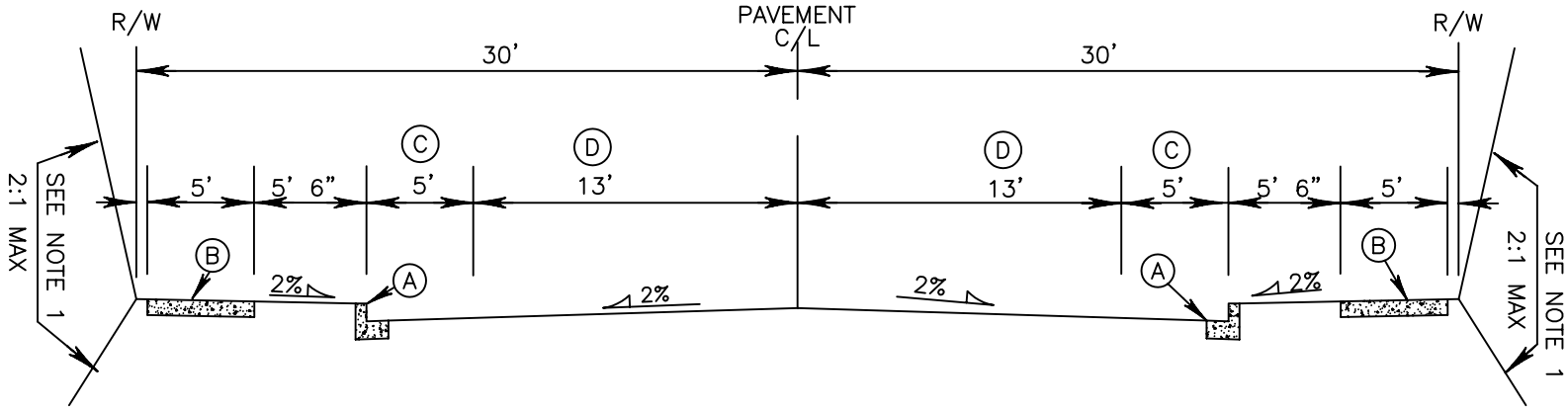

(A) CONCRETE CURB AND GUTTER TYPE A–1, SEE STD DETAIL 340

(B) CONCRETE SIDEWALK, SEE STD DETAIL 344

(C) CLASS II BIKE TRAIL

(D) 12' LANE IF THRU LANE IS NOT REQUIRED, AS DIRECTED BY PUBLIC WORKS DIRECTOR

City of Bothell
PUBLIC WORKS
COMMUNITY DEVELOPMENT

EXPIRES 06-29-05
EDDIE K. LOW
STATE OF WASHINGTON
22172
REGISTERED PROFESSIONAL ENGINEER

TYPICAL ROADWAY SECTION
COLLECTOR
CLASS II BIKE TRAIL

Alteration of this drawing is prohibited. Any approval of an altered drawing is unauthorized and void.

308

Revision Date
Oct, 2000

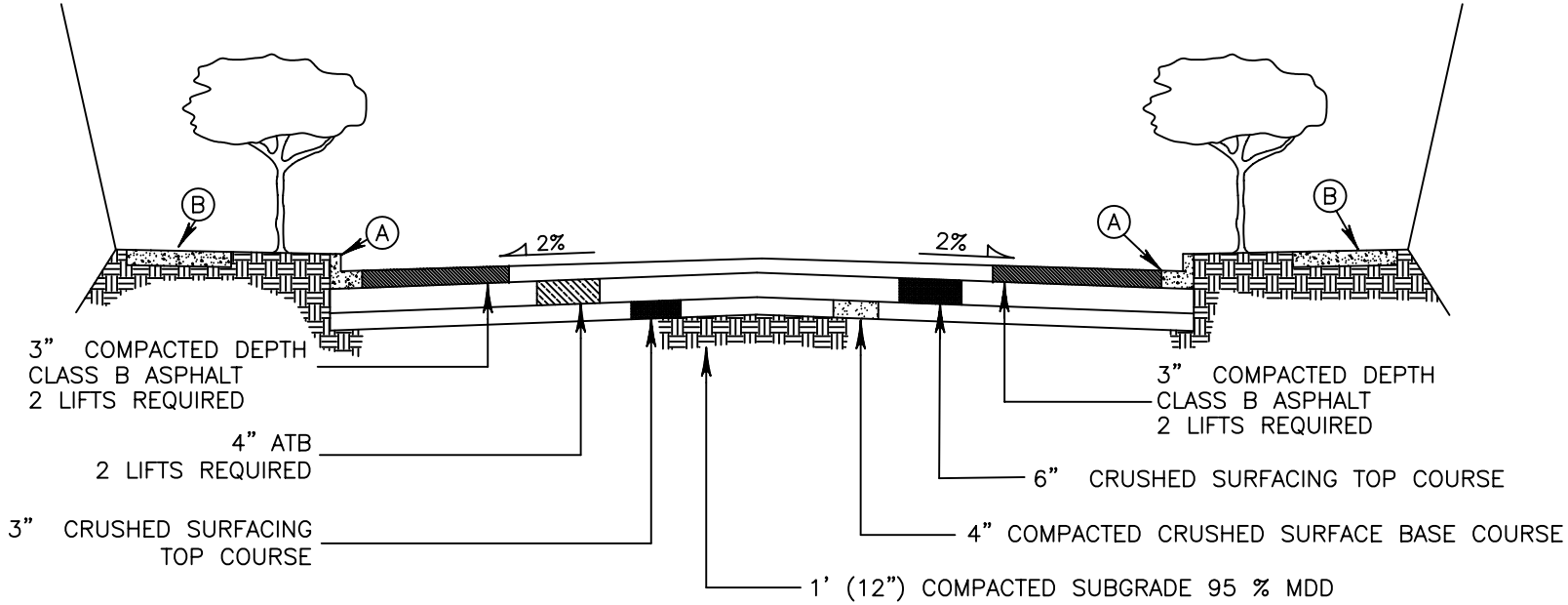

STANDARD PAVEMENT SECTION

ALTERNATE PAVEMENT SECTION

NOTES:

1 SLOPE EASEMENTS MAY BE REQUIRED (TYPICAL)
2 SEE LANDSCAPE DETAILS 362 AND 363
3 AN ADDITIONAL 8'-6" OF R/W WILL BE NEEDED IF ON-STREET PARKING IS PROVIDED

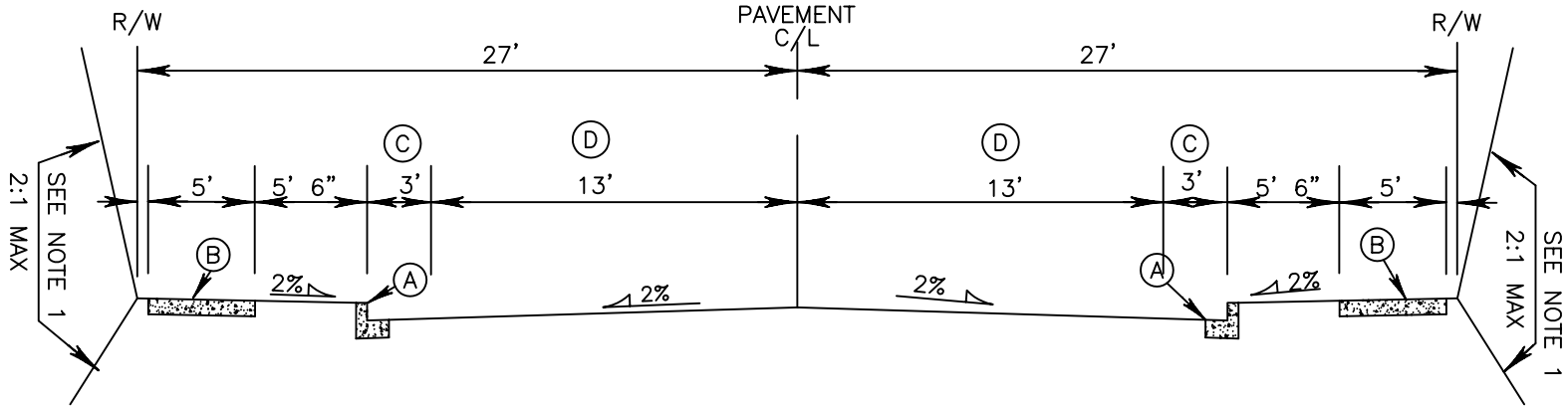

(A) CONCRETE CURB AND GUTTER TYPE A-1, SEE STD DETAIL 340

(B) CONCRETE SIDEWALK, SEE STD DETAIL 344

(C) CLASS III BIKE TRAIL

(D) 12' LANE IF TURN LANE IS NOT REQUIRED, AS DIRECTED BY PUBLIC WORKS DIRECTOR.

City of Bothell
PUBLIC WORKS
COMMUNITY DEVELOPMENT

EXPIRES 06-29-05
EDDIE K. LOW
PROFESSIONAL ENGINEER
STATE OF WASHINGTON
22172
REGISTERED

TYPICAL ROAD SECTION
COLLECTOR
CLASS III BIKE TRAIL

Alteration of this drawing is prohibited. Any approval of an altered drawing is unauthorized and void.

309

Revision Date
Oct, 2000

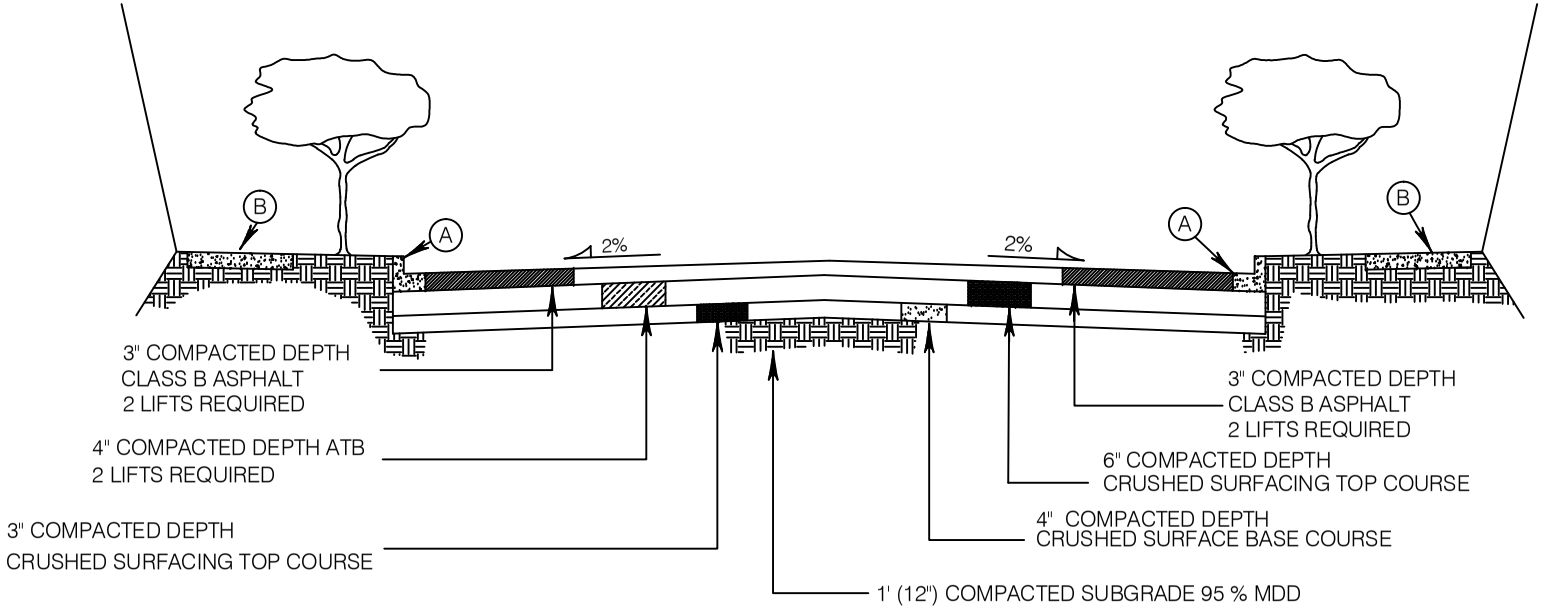

STANDARD PAVEMENT SECTION

LEFT SIDE (RIGHT SIDE TO BE MIRROR IMAGE)

ALTERNATE PAVEMENT SECTION

RIGHT SIDE (LEFT SIDE TO BE MIRROR IMAGE)

NOTES:

1. SLOPE EASEMENTS MAY BE REQUIRED
2. ALLOWS PARKING ON ONE SIDE OF STREET.

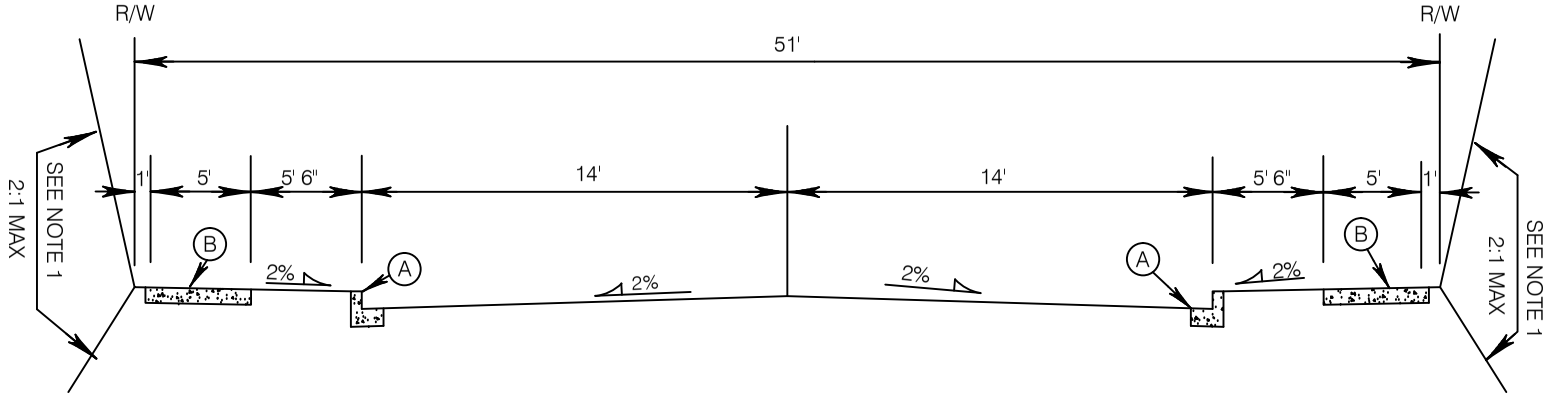

(A) CONCRETE CURB AND GUTTER, SEE STD DETAIL 340

(B) CONCRETE SIDEWALK, SEE STD DETAIL 344

City of Bothell™

City of Bothell

PUBLIC WORKS DEPARTMENT

Approved By:

City Engineer

TYPICAL ROADWAY SECTION LOCAL ACCESS

Standard Detail

310

Revision Date

Jun, 2015

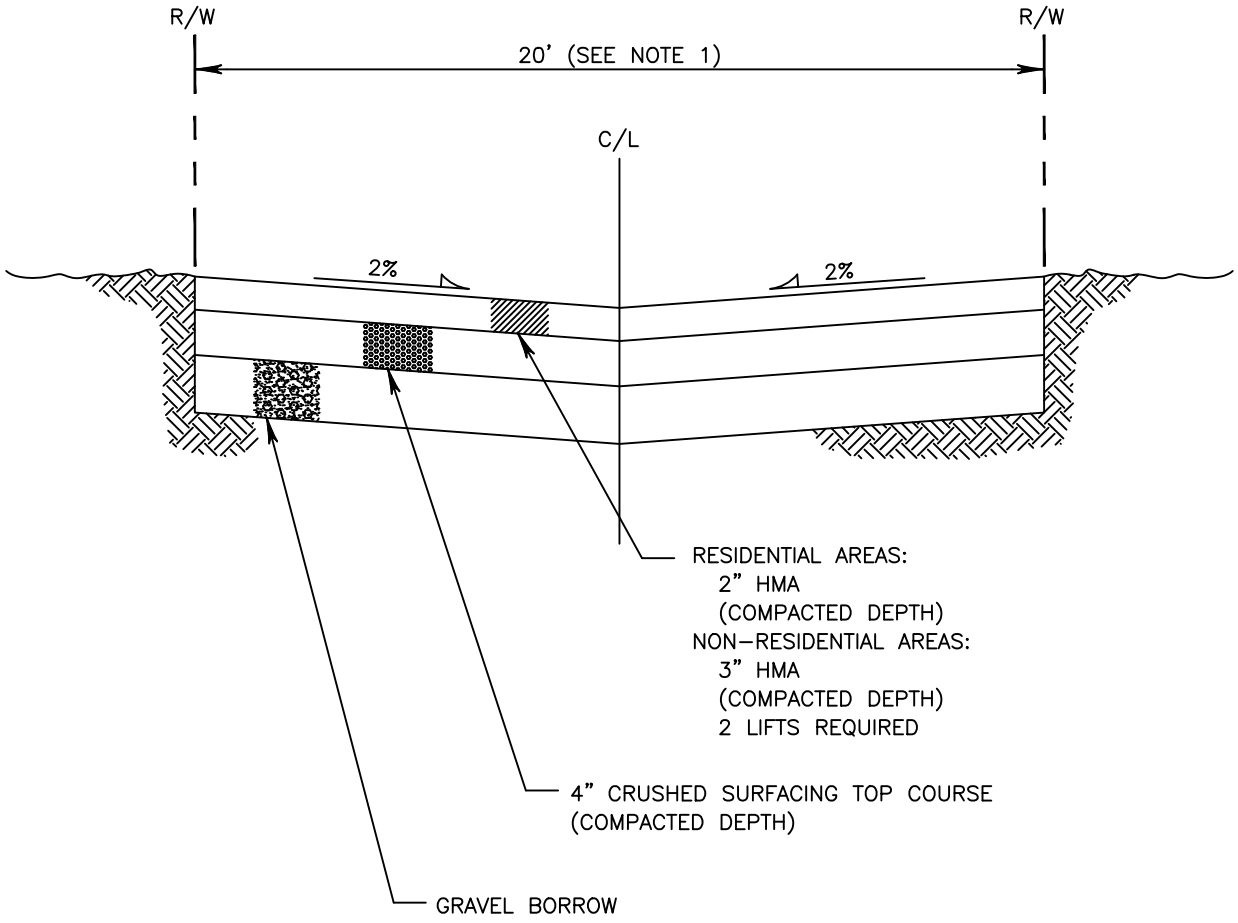

NOTES:

1 ALL NEW ALLEYS SHALL HAVE A MINIMUM WIDTH OF 20'. EXISTING ALLEY RIGHT-OF-WAY WIDTH IS 16'.

2 INVERT DRAINAGE TO BE COLLECTED AT LOW END OF IMPROVED SECTION WITH CATCH BASIN INSTALLATION AND TIGHTLINED TO STORM DRAINAGE SYSTEM.

3 COMPACTION TESTS ON SUBGRADE AND TOP OF ROCK WILL BE REQUIRED. THE NUMBER OF TESTS SHALL BE AT THE DISCRETION OF THE DIRECTOR. ALL TESTING SHALL BE THROUGH A LICENSED TESTING LABORATORY AT THE EXPENSE OF CONTRACTOR OR DEVELOPER. THE MINIMUM COMPACTION SHALL BE 95% OF MAXINUM DRY DENSITY OF BOTH SUBGRADE AND TOP OF ROCK.

4 ADJUSTMENT OF CATCH BASIN LIDS OR GRATES, MONUMENT CASES, VALVE BOXES, ETC SHALL BE THE RESPONSIBILITY OF THE CONTRACTOR OR DEVELOPER AS REQUIRED.

City of Bothell	**City of Bothell** **PUBLIC WORKS DEPARTMENT**	Approved By: City Engineer	TYPICAL ALLEY	Standard Detail **311** Revision Date Dec, 2016

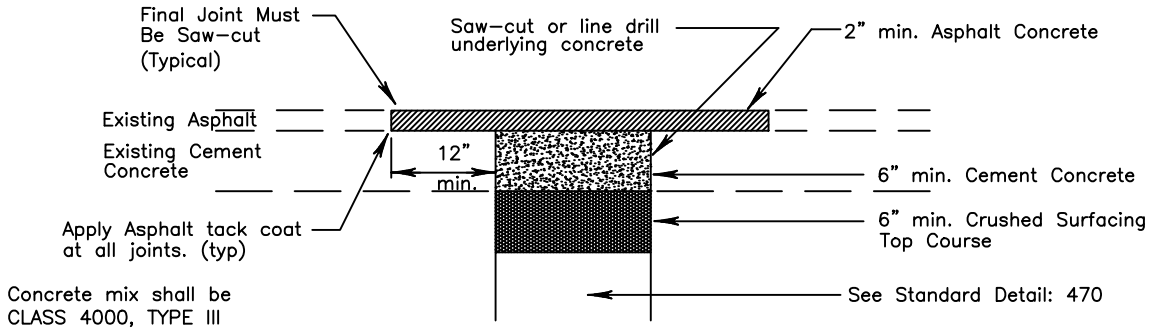

EXISTING ASPHALT CONCRETE OVER CEMENT CONCRETE

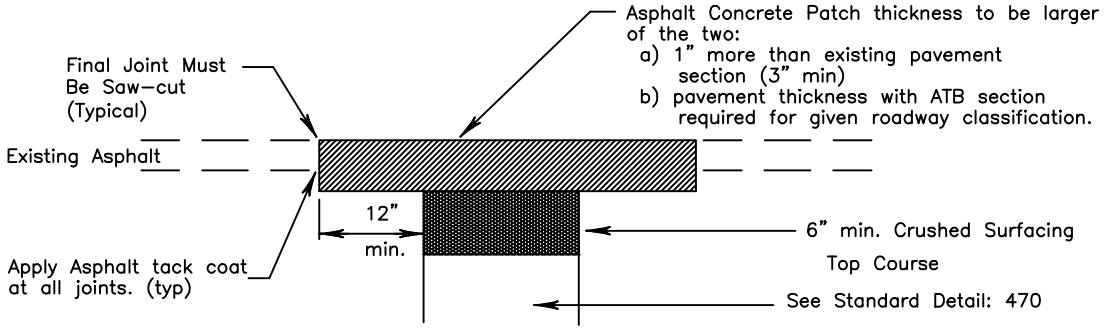

EXISTING ASPHALT CONCRETE OVER PREPARED GRADE

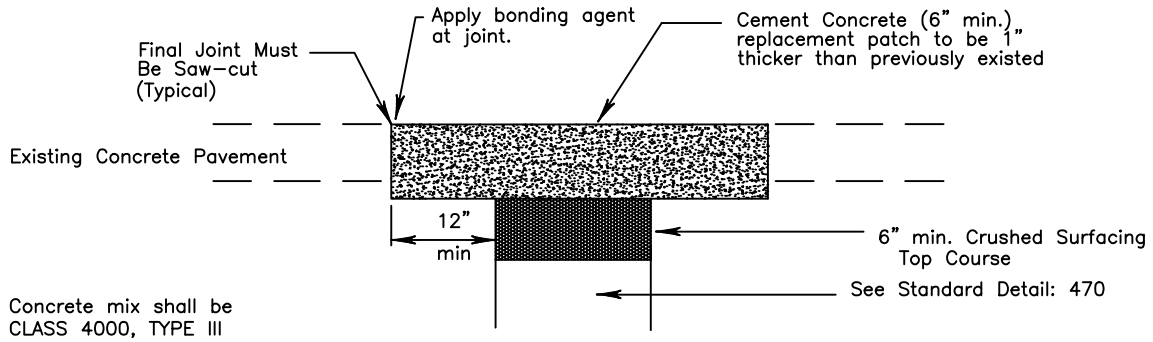

EXISTING CEMENT CONCRETE OVER PREPARED GRADE

NOTES:

1. ALL TRENCHES IN ROADWAY AREAS SHALL BE BACKFILLED AND PATCHED WITH TEMPORARY ASPHALT AT THE END OF EACH WORK DAY, UNLESS PERMISSION IS GRANTED TO DO OTHERWISE BY THE CITY ENGINEER,
2. ALL TEMPORARY PATCHES ON TRENCHES SHALL BE PERMANENTLY PATCHED WITHIN 2 WEEKS OF COMPLETION OF WORK WITHIN THE ROADWAY AREA.

City of Bothell	**City of Bothell** **PUBLIC WORKS DEPARTMENT**	Approved By: City Engineer	PAVEMENT PATCHING	Standard Detail **317** Revision Date Feb, 2012

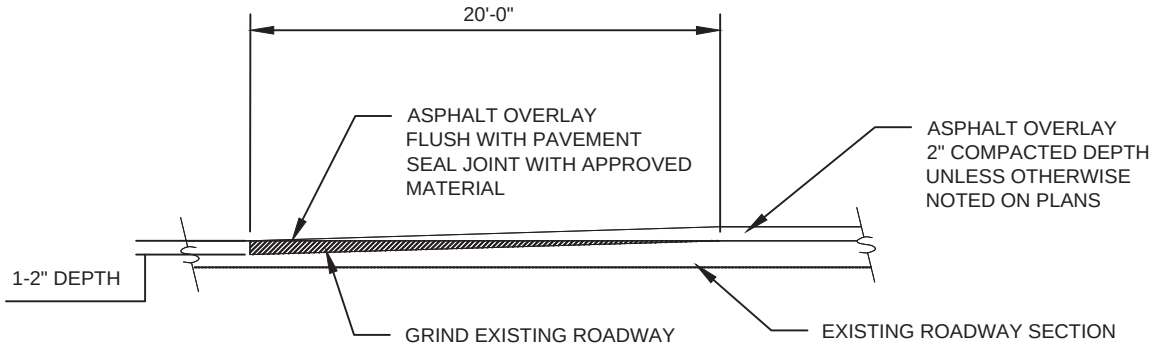

BUTT JOINT DETAIL

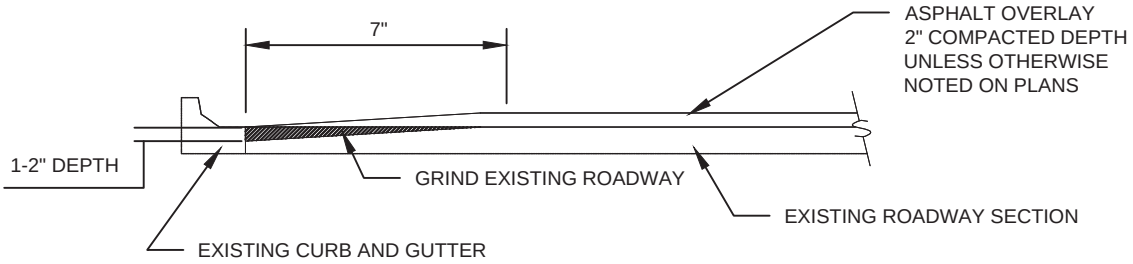

EDGE PLANING DETAIL

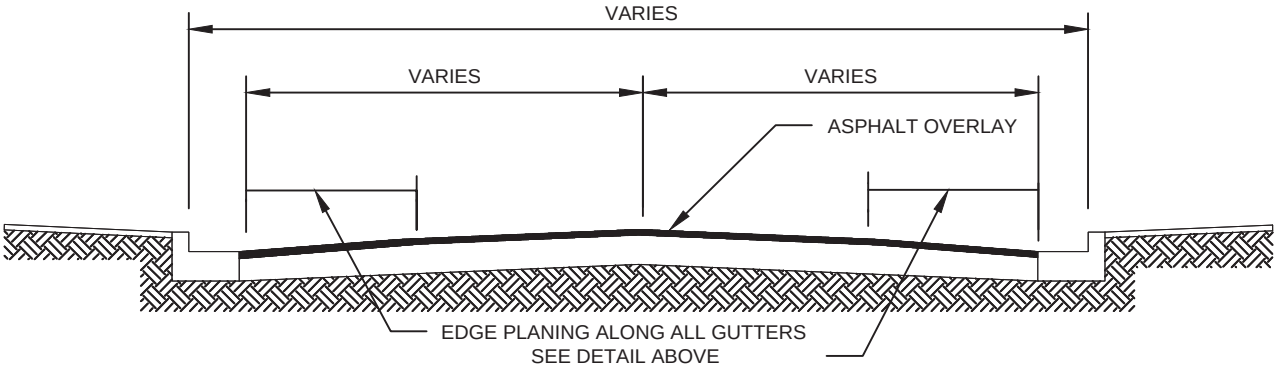

TYPICAL OVERLAY DETAIL

City of Bothell	**City of Bothell** **PUBLIC WORKS DEPARTMENT**	Approved By: City Engineer	PAVEMENT PLANING	Standard Detail **318** Revision Date Feb, 2012

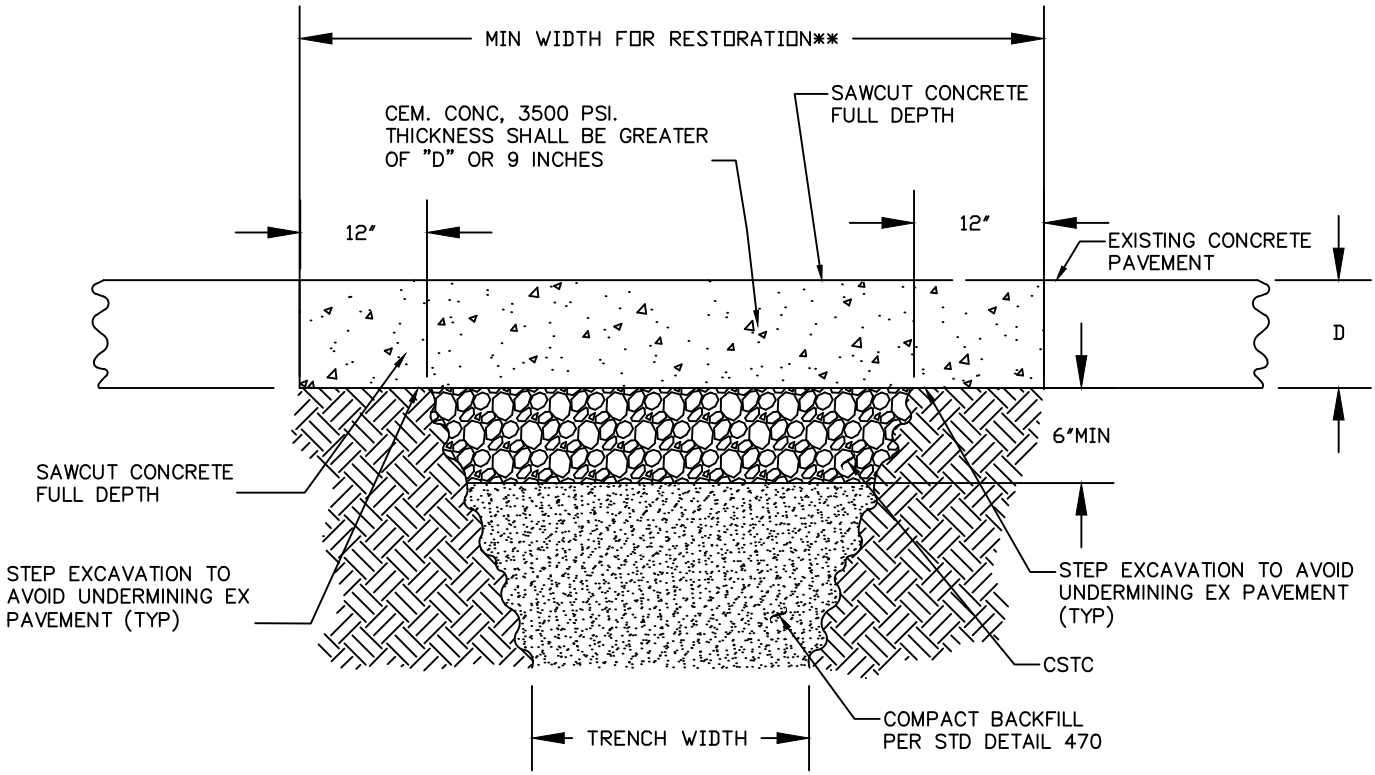

** DEPTH OF RESTORATION SHALL MATCH THE EXISTING DEPTH

City of Bothell™	**City of Bothell** **PUBLIC WORKS DEPARTMENT**	Approved By: City Engineer	CONCRETE PAVEMENT PATCHING	Standard Detail **319** Revision Date Nov, 2013

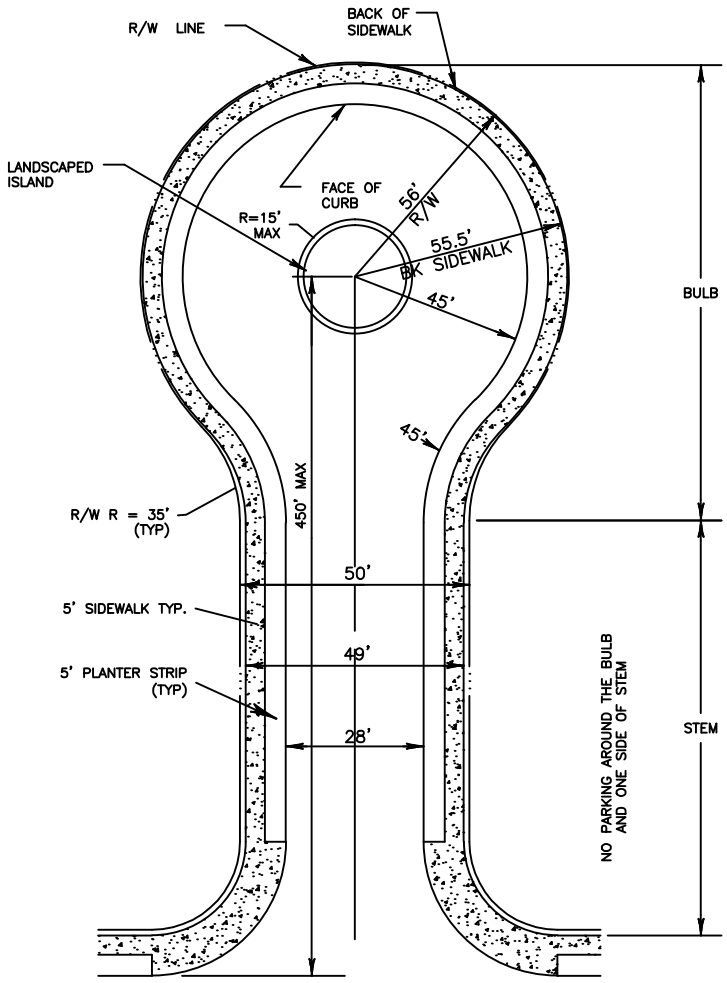

CUL-DE-SAC

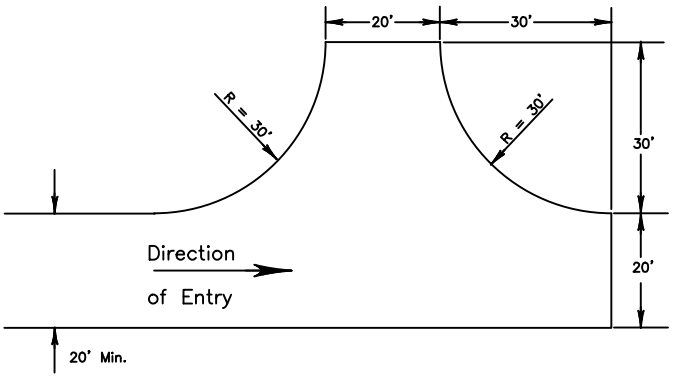

SIDE ENTRY

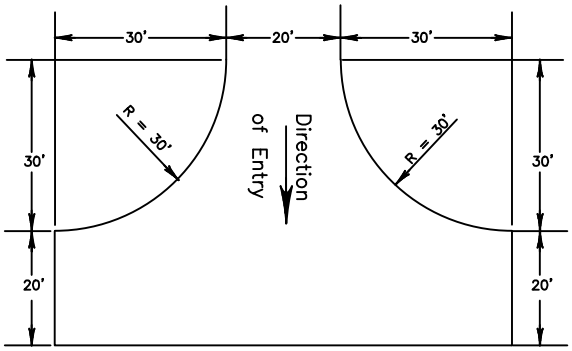

CENTER ENTRY

City of Bothell	**City of Bothell** **PUBLIC WORKS DEPARTMENT**	Approved By: City Engineer	TYPICAL CUL-DE-SAC AND HAMMERHEAD TURNAROUND FOR FIRE DEPARTMENT	Standard Detail **320** Revision Date Feb, 2012

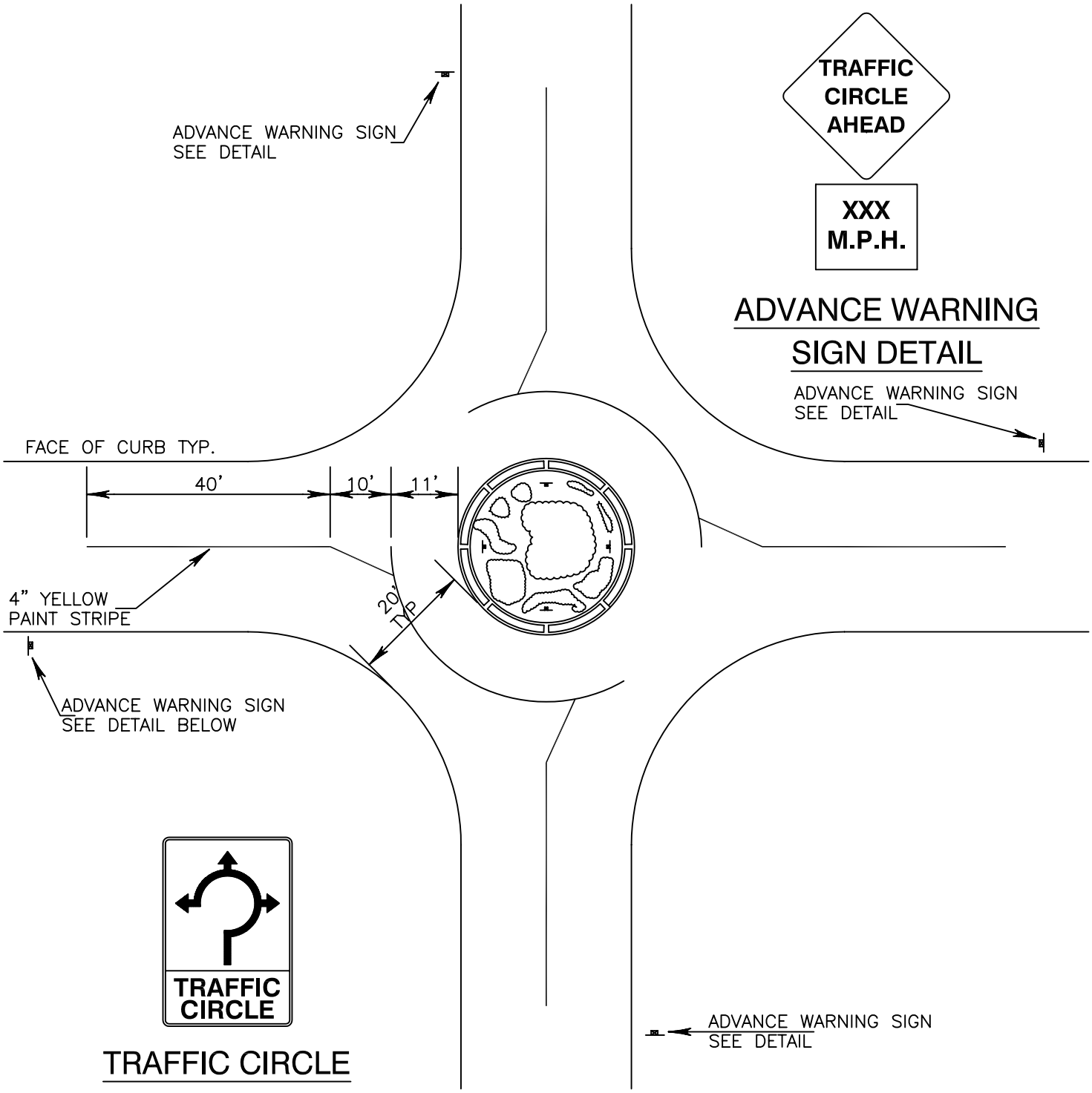

TYPICAL TRAFFIC CIRCLE DESIGN FOR 20 M.P.H.

City of Bothell

PUBLIC WORKS

COMMUNITY DEVELOPMENT

EDDIE K. LOW
STATE OF WASHINGTON
32172
REGISTERED
PROFESSIONAL ENGINEER
EXPIRES 08-29-05

TRAFFIC CALMING DEVICES
TRAFFIC CIRCLE

Alteration of this drawing is prohibited. Any approval of an altered drawing is unauthorized and void.

326

Revision Date
Oct, 2000

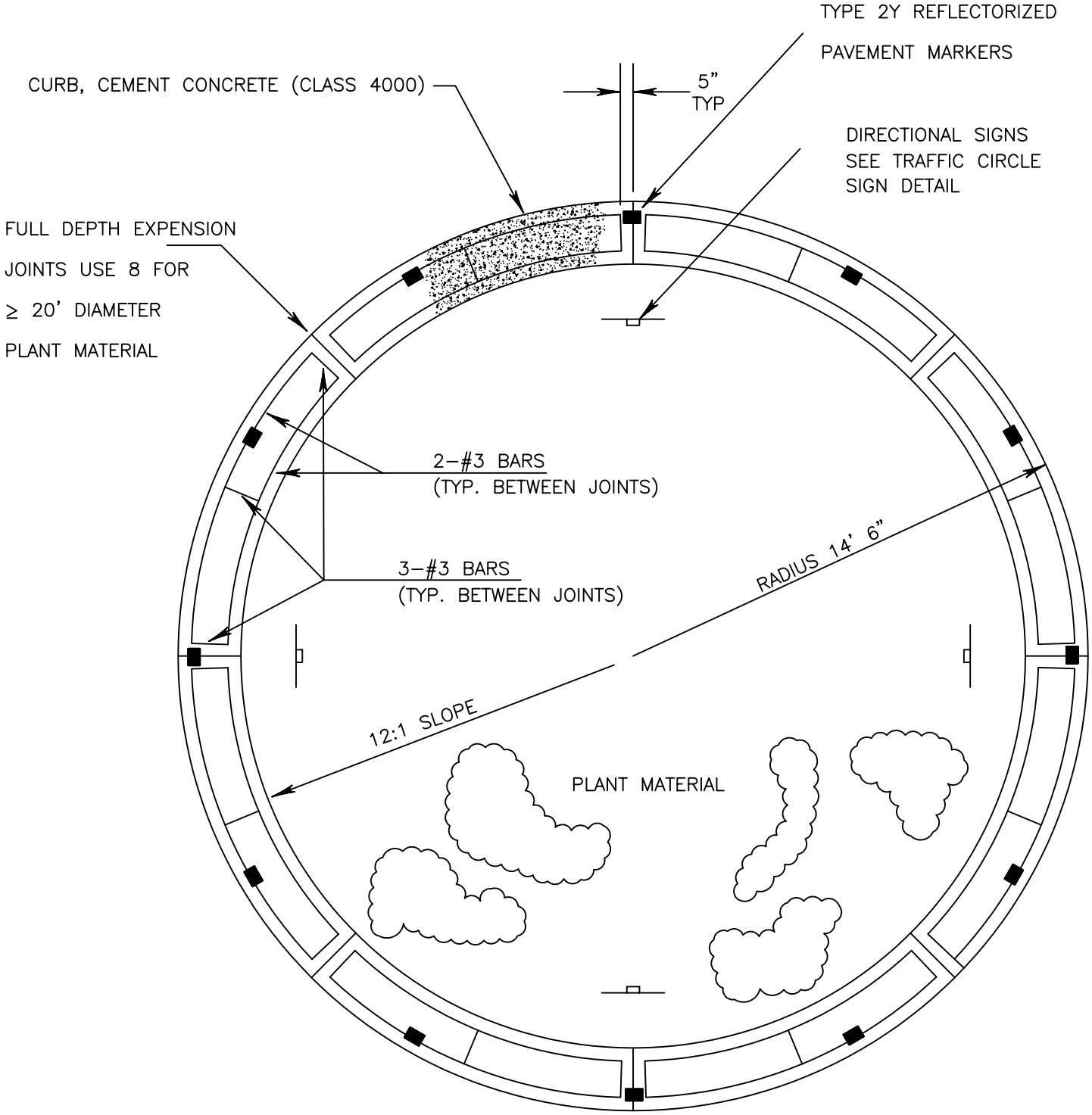

City of Bothell

PUBLIC WORKS

COMMUNITY DEVELOPMENT

EDDIE K. LOW
STATE OF WASHINGTON
52172
REGISTERED
PROFESSIONAL ENGINEER
EXPIRES 08-29-05

TRAFFIC CALMING DEVICES
TRAFFIC CIRCLE

Alteration of this drawing is prohibited. Any approval of an altered drawing is unauthorized and void.

326A

Revision Date
Oct, 2000

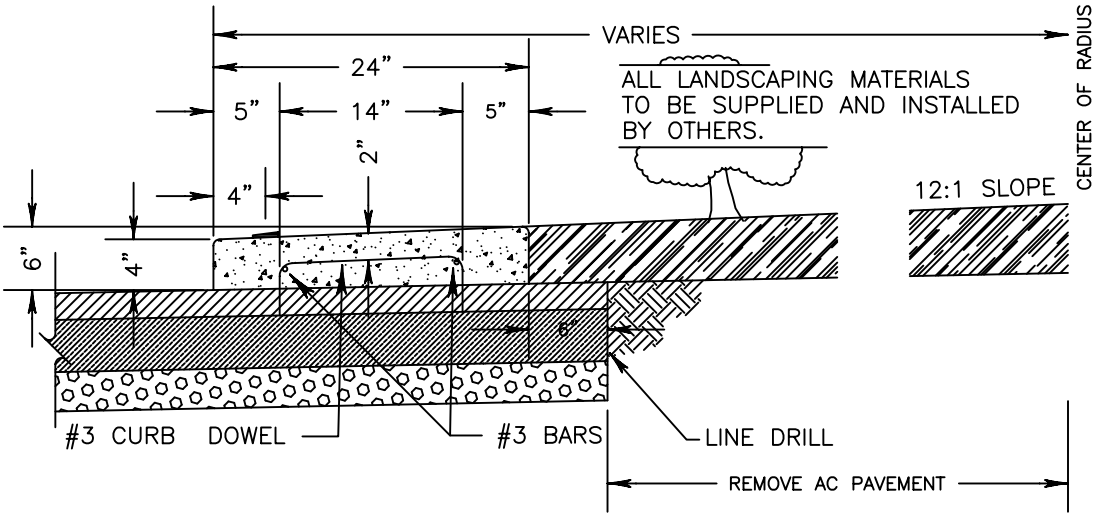

OPTION 1 CROSS SECTION
CURBING W/TOP SOIL BACKFILL

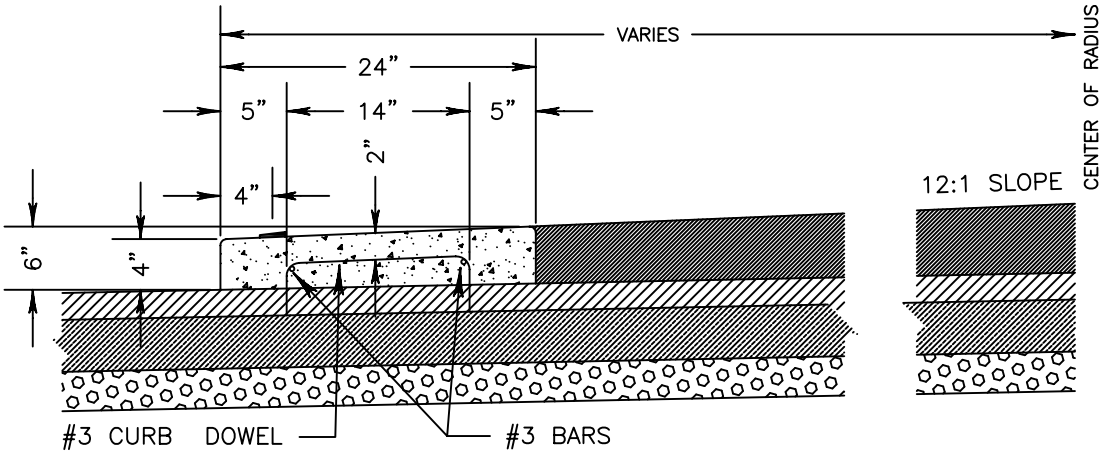

OPTION 2 CROSS SECTION
CURBING W/ASPHALT BACKFILL

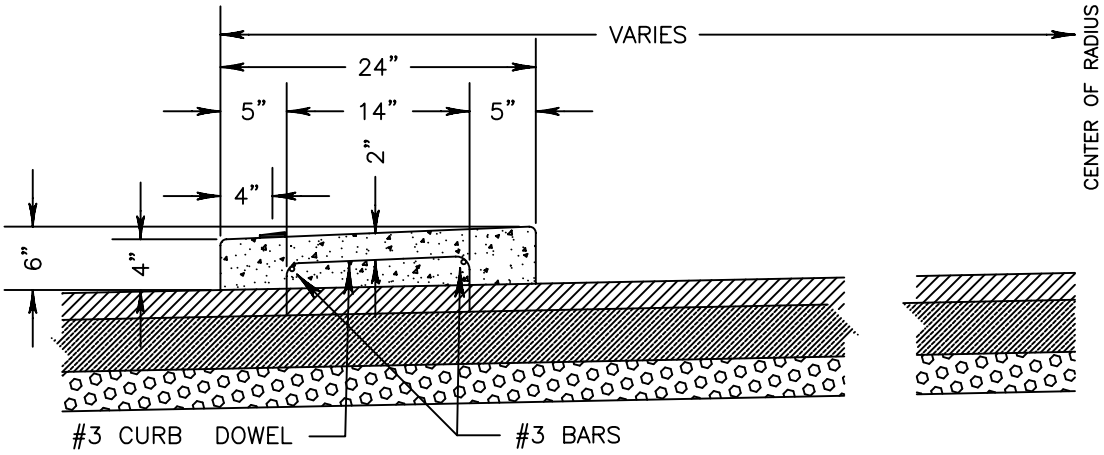

OPTION 3 CROSS SECTION
CURBING ONLY

City of Bothell

PUBLIC WORKS

COMMUNITY DEVELOPMENT

EDDIE K. LOW
BAKER, WASHINGTON
22172
REGISTERED
PROFESSIONAL ENGINEER
EXPIRES 08-29-05

TRAFFIC CALMING DEVICE
TRAFFIC CIRCLE
TYPICAL CROSS SECTIONS

Alteration of this drawing is prohibited. Any approval of an altered drawing is unauthorized and void.

326B

Revision Date
Oct, 2000

NOTE: ANCHOR TENSION STRAPS SHALL BE CUT. CHAIN LOCK AND STAKES REMOVED AT THE END OF THE FIRST YEAR PLANT ESTABLISHMENT PERIOD.

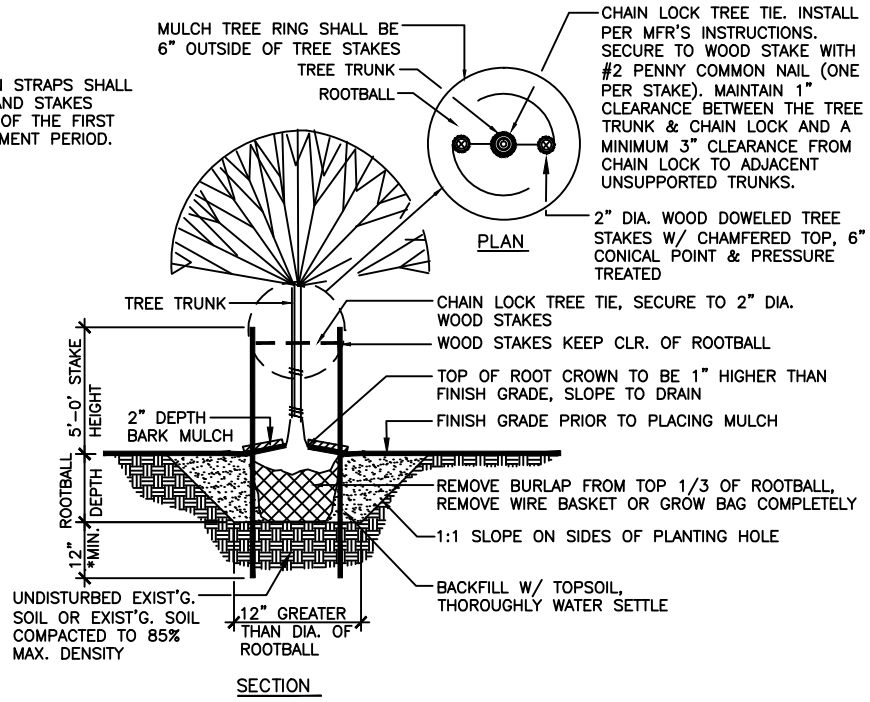

* UP TO 24" DEEP DEPENDING ON AVAILABLE PLANTING WIDTH.

DECIDUOUS/CONIFER TREE PLANTING DETAIL

NTS

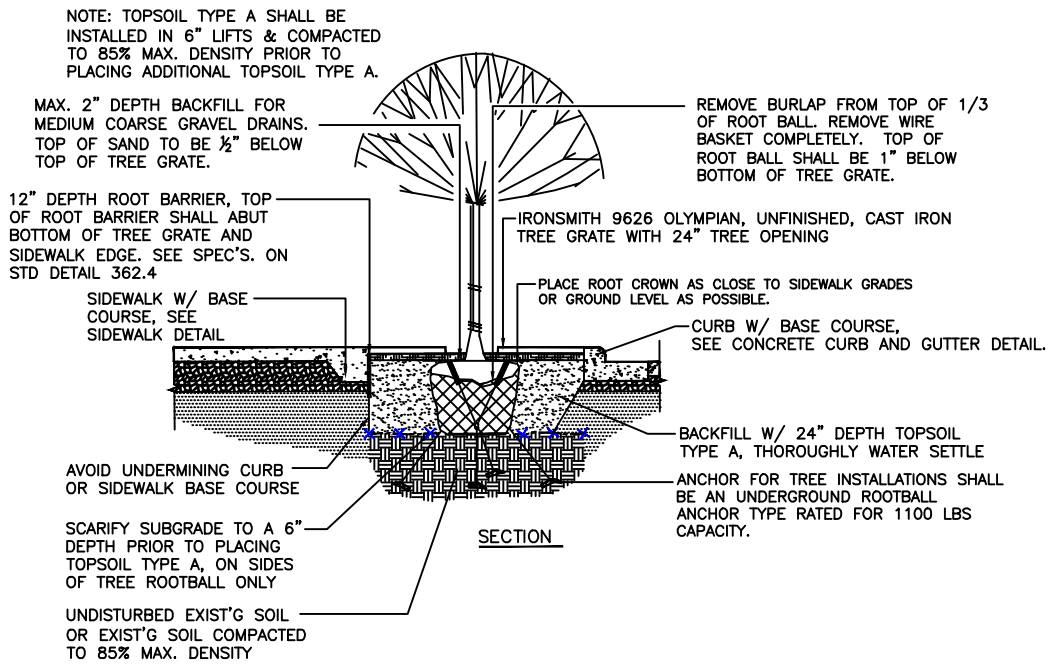

DECIDUOUS TREE PLANTING IN TREE GRATE DETAIL

City of Bothell™	**City of Bothell** **PUBLIC WORKS DEPARTMENT**	Approved By: City Engineer	TREE PLANTING	Standard Detail **330** Revision Date Jun, 2015

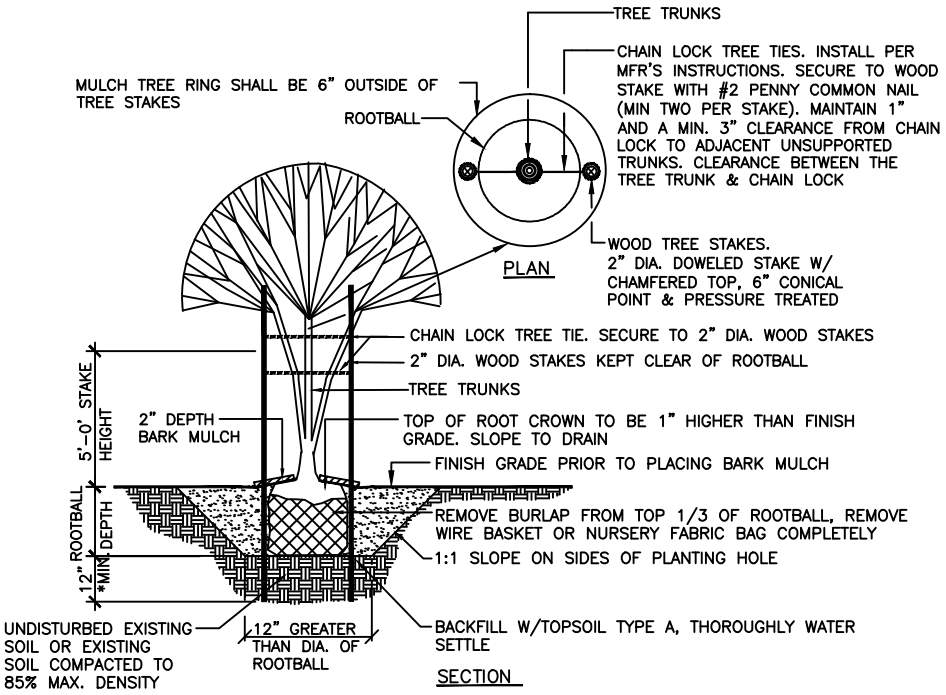

* UP TO 24" DEEP DEPENDING ON AVAILABLE PLANTING WIDTH.

MULTI-STEM DECIDUOUS TREE PLANTING DETAIL

NTS

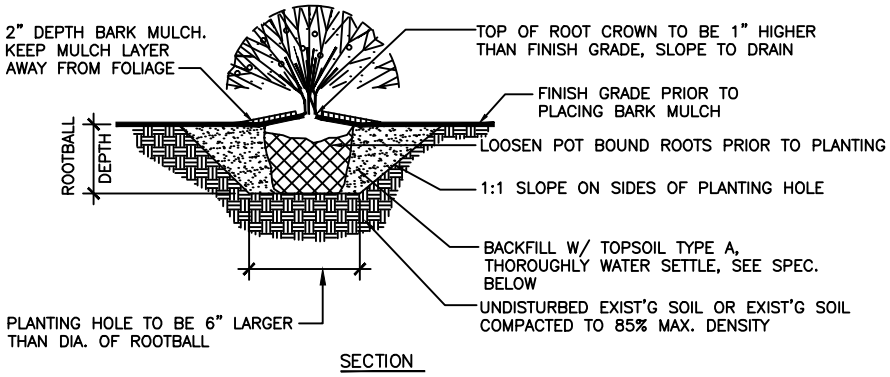

NOTE:
1. PLACE ROOT CROWN AS CLOSE TO SIDEWALK GRADES OR GROUND LEVEL AS POSSIBLE.

GROUNDCOVER & SHRUB PLANTING DETAIL

NTS

City of Bothell	**City of Bothell** **PUBLIC WORKS DEPARTMENT**	City Engineer	GROUNDCOVER SHRUB AND MULTI-STEM TREE PLANTING	Standard Detail **331** Revision Date Feb, 2012

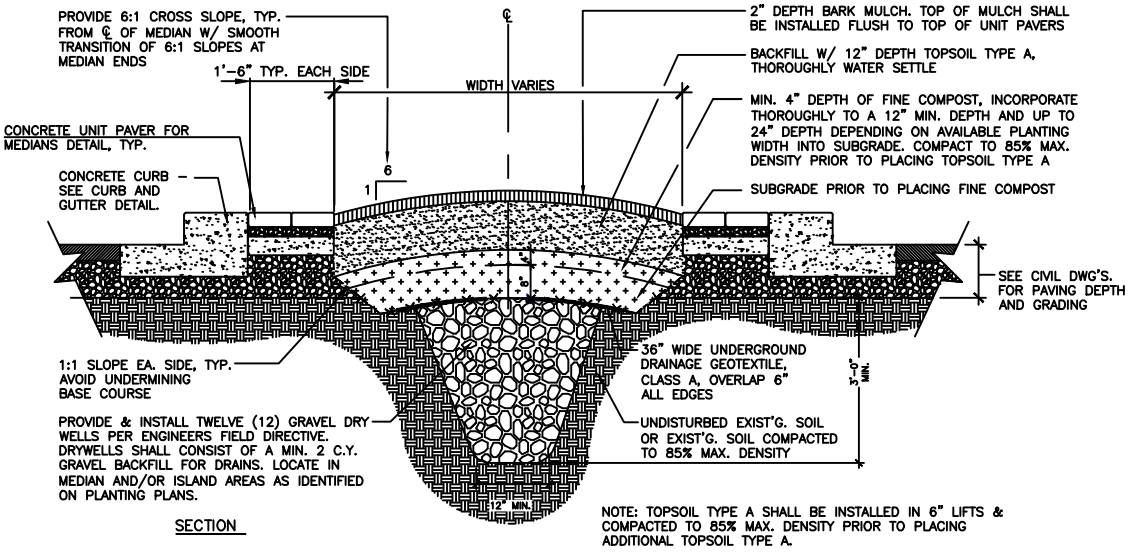

SECTION

MEDIAN PLANTING DETAIL

NTS

City of Bothell™	**City of Bothell** **PUBLIC WORKS DEPARTMENT**	Approved By: City Engineer	MEDIAN PLANTING	Standard Detail **332** Revision Date Nov, 2013

City of Bothell

City of Bothell

PUBLIC WORKS DEPARTMENT

Approved By:

City Engineer

DETECTABLE WARNING SURFACE

Standard Detail

334

Revision Date

Feb, 2012

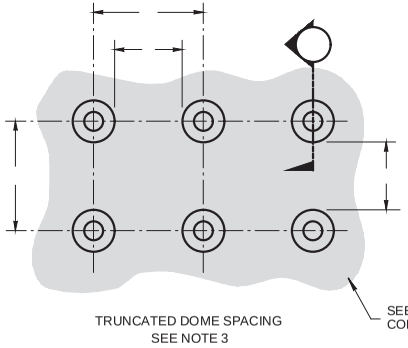

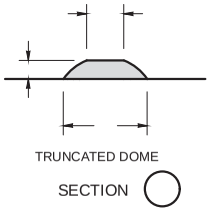

	1.60"	2.40"
	0.65"	—
	0.45"	0.90"
	0.9"	1.40"
	0.2"	0.2"

TRUNCATED DOME DETAILS

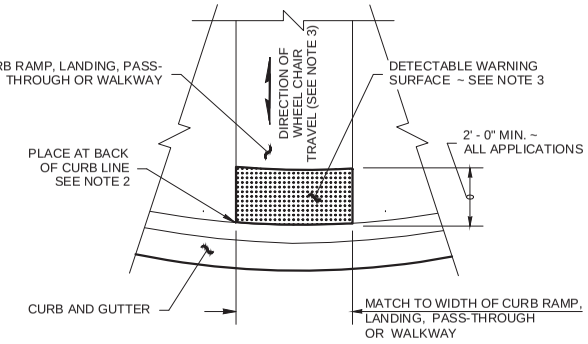

DETECTABLE WARNING SURFACE DETAIL

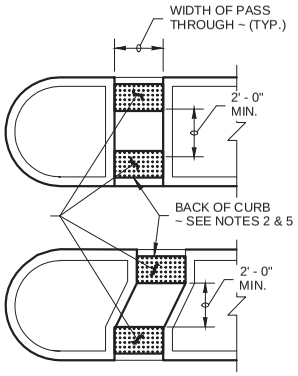

MEDIAN PASS-THROUGH

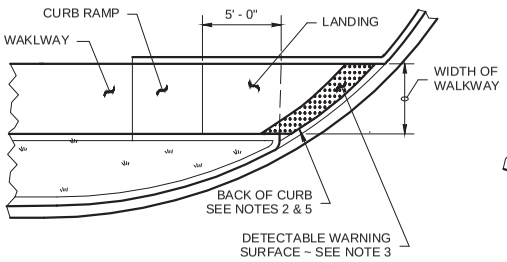

SINGLE DIRECTION CURB RAMP

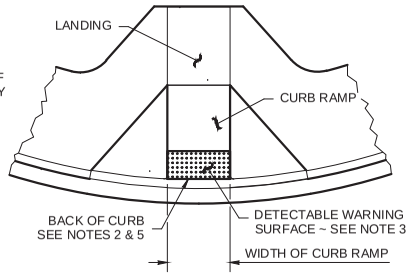

PERPENDICULAR CURB RAMP

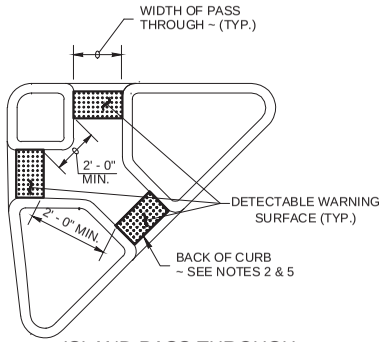

ISLAND PASS-THROUGH

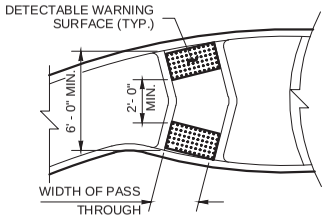

ROUNDABOUT SPLITTER ISLAND

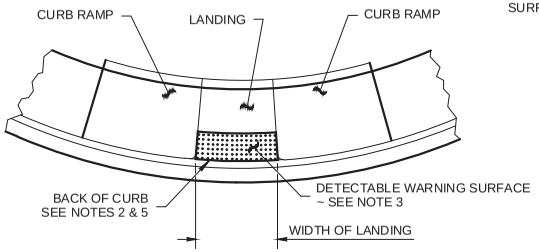

PARALLEL CURB RAMP

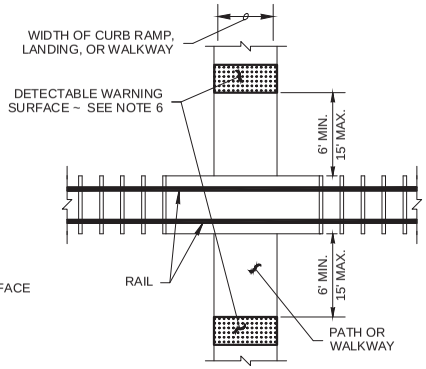

PEDESTRIAN RAILROAD CROSSING

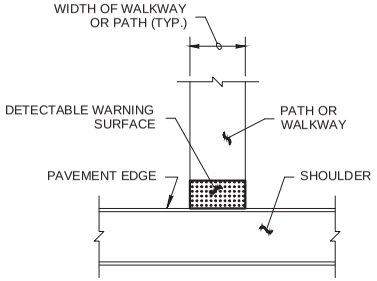

SHARED-USE PATH CONNECTION

NOTES:

1. The Detectable Warning Surface shall extend the full width of the curb ramp (exclusive of flares) or the landing.
2. The edge of the Detectable Warning Surface shall be placed along the back of the curb line.
3. The rows of truncated domes in a Detectable Warning Surface shall be parallel with the direction of wheel.
4. See Std Details 340 and 344 for curb ramp and sidewalk details.
5. If a curb is not present, place the Detectable Warning Surface at the edge of the pavement.
6. If a curb ramp is required, the location of the Detectable Warning Surface must be at the bottom of the ramp and within the required distance from rail.

PLACEMENT GUIDELINES

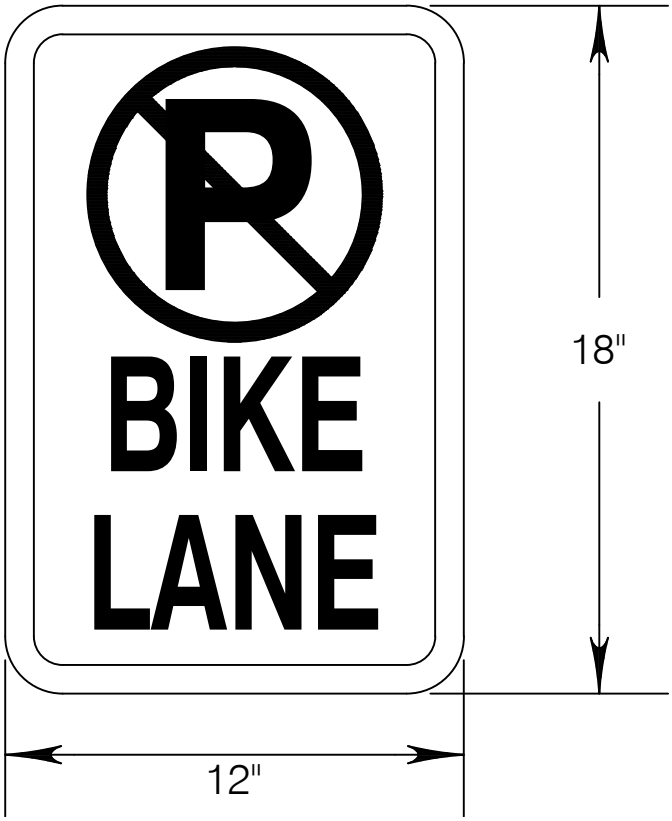

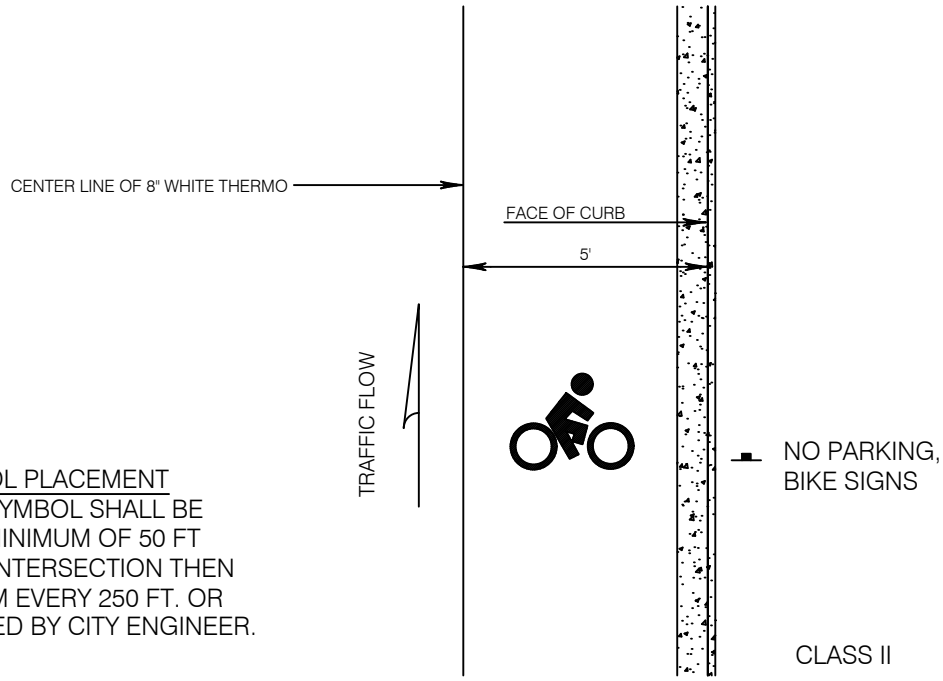

BIKE SYMBOL PLACEMENT
THE FIRST SYMBOL SHALL BE PLACED A MINIMUM OF 50 FT FROM THE INTERSECTION THEN PLACE THEM EVERY 250 FT. OR AS APPROVED BY CITY ENGINEER.

City of Bothell™	**City of Bothell** **PUBLIC WORKS DEPARTMENT**	Approved By: City Engineer	SIGNAGE AND BIKE LANE MARKINGS	Detail **335** Revision Date Dec, 2016

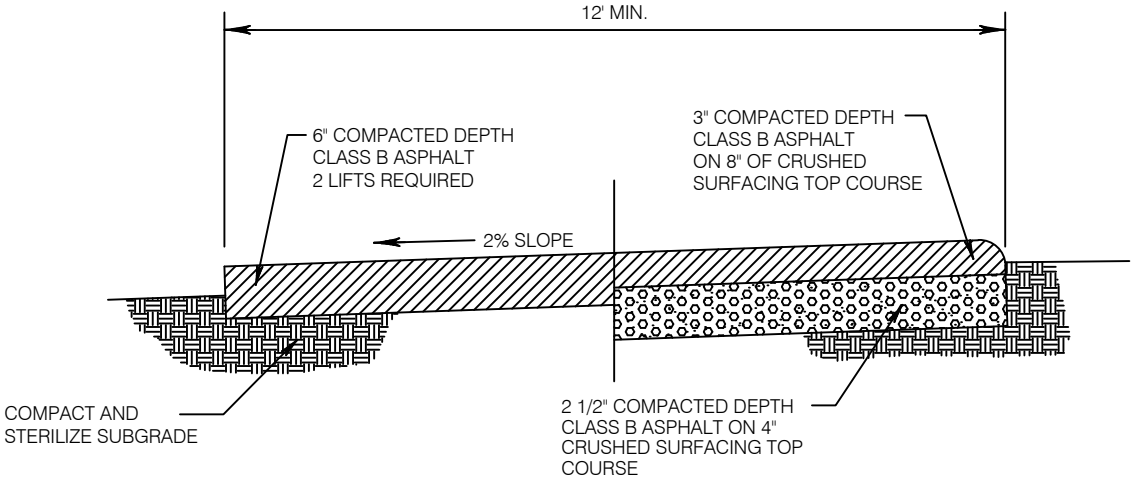

MAINTENANCE ACCESS

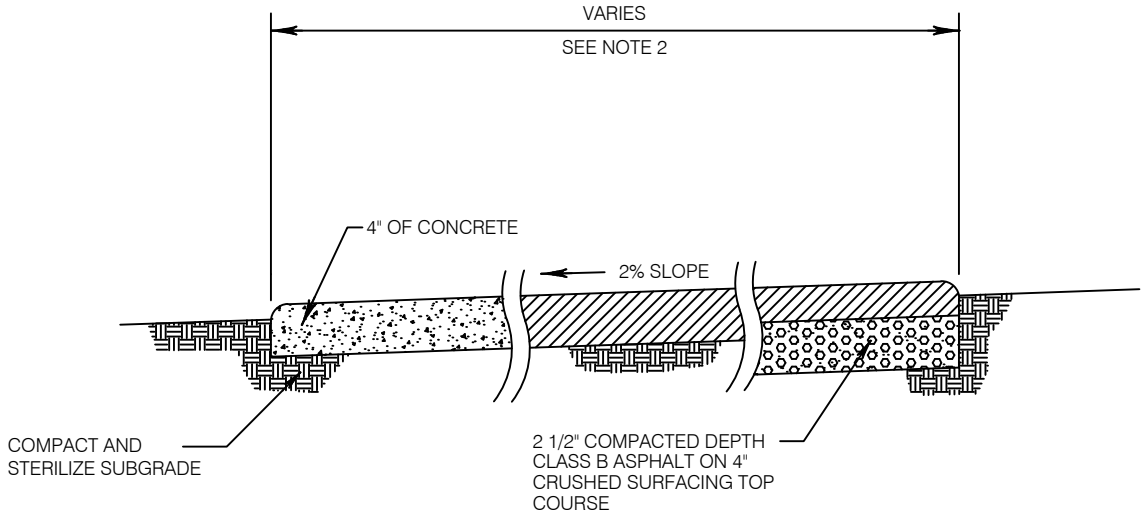

PEDESTRIAN PATH/BIKEWAY

CLASS I

NOTE:

1. CONCRETE SHALL BE 3000 P.S.I. AT 8 DAYS, SIX SAC MIX, SLUMP RANGE OF 1 1/2"-3".

2. ONE-WAY = 5' MIN.; TWO-WAY = 8' MIN.

City of Bothell™	**City of Bothell** **PUBLIC WORKS DEPARTMENT**	Approved By: City Engineer	MAINTENANCE ACCESS PEDESTRIAN/PATH/ BIKEWAY CLASS - 1	Standard Detail **336** Revision Date Nov, 2013

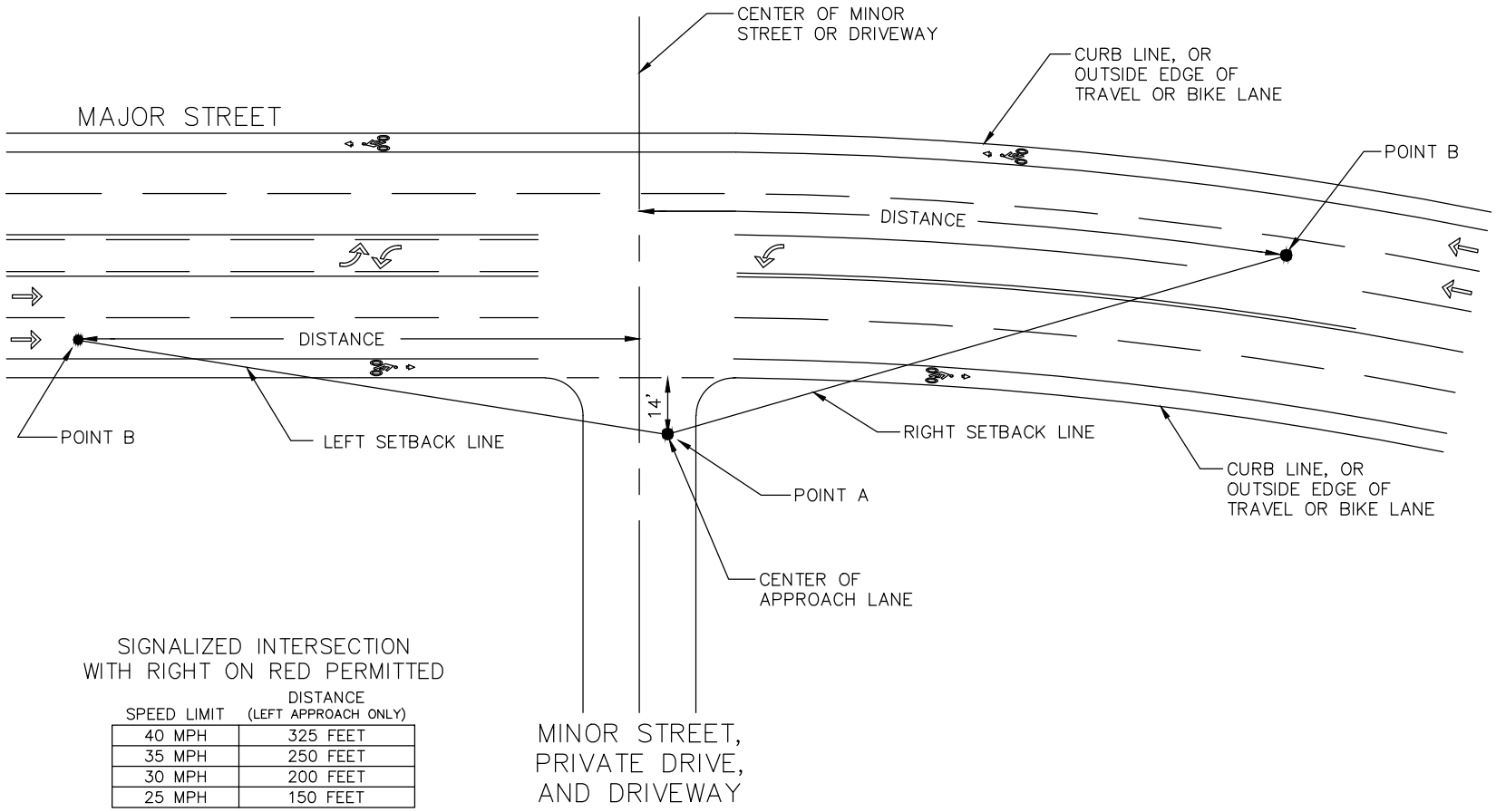

SIGNALIZED INTERSECTION WITH RIGHT ON RED PERMITTED

SPEED LIMIT	DISTANCE (LEFT APPROACH ONLY)
40 MPH	325 FEET
35 MPH	250 FEET
30 MPH	200 FEET
25 MPH	150 FEET

MINOR STREETS, PRIVATE ROADS, AND COMMERCIAL DRIVEWAYS

SPEED LIMIT	DISTANCE
40 MPH	410 FEET
35 MPH	360 FEET
30 MPH	300 FEET
25 MPH	250 FEET

RESIDENTIAL DRIVEWAYS

SPEED LIMIT	DISTANCE
40 MPH	325 FEET
35 MPH	250 FEET
30 MPH	200 FEET
25 MPH	150 FEET

City of Bothell™

City of Bothell

PUBLIC WORKS DEPARTMENT

Approved By:

City Engineer

SIGHT DISTANCE SETBACK LINES

Standard Detail

337

Revision Date

Feb, 2012

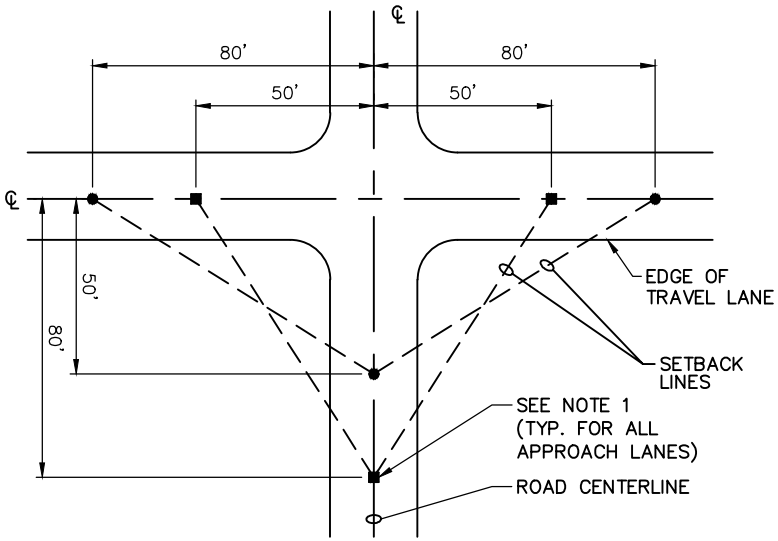

UNCONTROLLED 4–WAY INTERSECTION

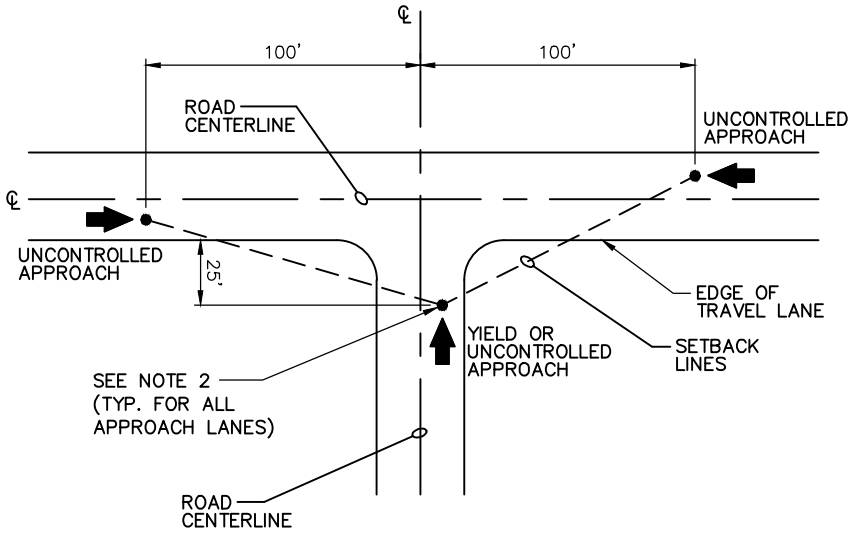

YIELD OR UNCONTROLLED "T" INTERSECTIONS

NOTES:

1. FOR UNCONTROLLED 4–WAY INTERSECTION SETBACK POINTS MEASURED FROM ROAD CENTERLINES.
2. FOR YIELD OR UNCONTROLLED "T" INTERSECTION SETBACK POINTS MEASURED FROM CENTER OF APPROACH LANE.
3. FOR USE ON 25 MPH STREETS. FOR STREETS WITH SPEED LIMITS GREATER THAN 25 MPH, SEE ENGINEER.
4. FOR DOWNTOWN AREA, MUST HAVE 30' CLEARANCE FROM EDGE OF PAVEMENT.

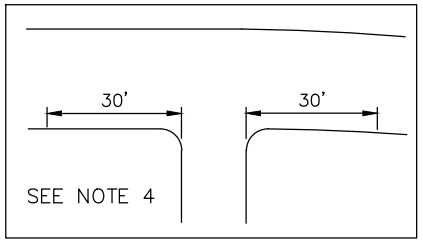

City of Bothell

City of Bothell

PUBLIC WORKS DEPARTMENT

Approved By:

City Engineer

SIGHT DISTANCE
UNCONTROLLED AND
YIELD INTERSECTIONS

Standard Detail

338

Revision Date
Feb, 2012

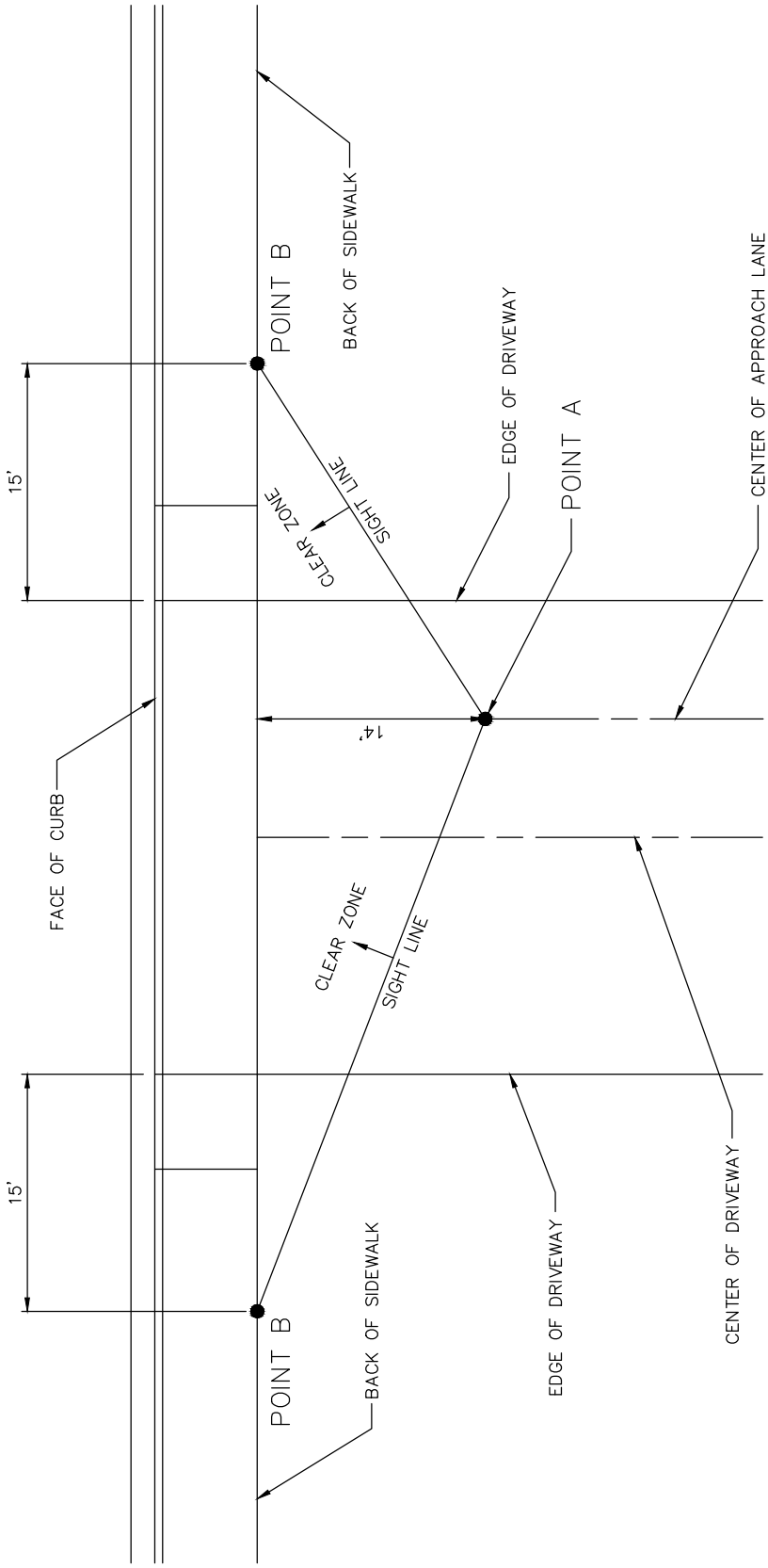

City of Bothell™

City of Bothell

PUBLIC WORKS DEPARTMENT

Approved By:

City Engineer

PEDESTRIAN SIGHT LINES

Standard Detail

339

Revision Date

Feb, 2012

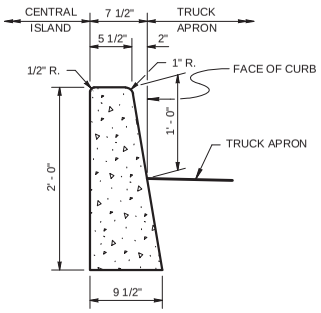

ROUNDABOUT CENTRAL ISLAND
CEMENT CONCRETE CURB

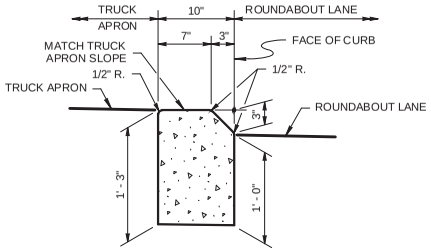

ROUNDABOUT TRUCK APRON
CEMENT CONCRETE CURB

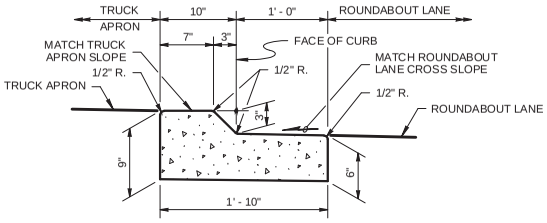

ROUNDABOUT TRUCK APRON
CEMENT CONCRETE
CURB AND GUTTER

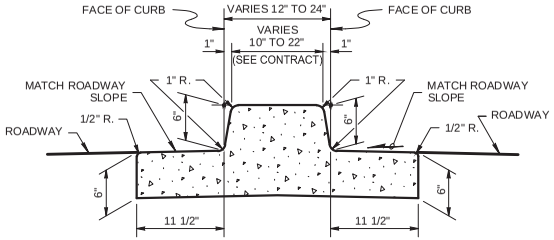

DUAL-FACED CEMENT CONCRETE
TRAFFIC CURB AND GUTTER

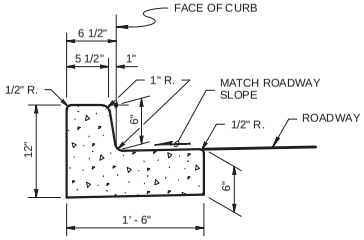

CEMENT CONCRETE
TRAFFIC CURB AND GUTTER

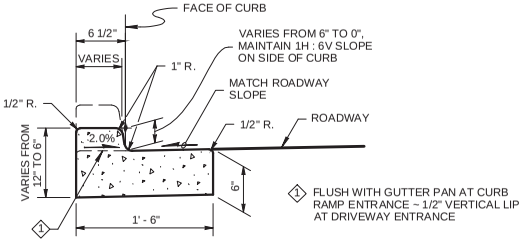

DEPRESSED CURB SECTION
AT CURB RAMPS AND
DRIVEWAY ENTRANCES

Note:

See WSDOT Standard Plan F-30.10 for Curb Expansion and Contraction Joint spacing.

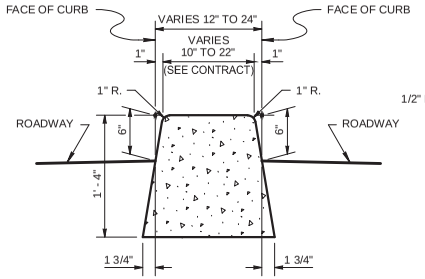

DUAL-FACED CEMENT
CONCRETE TRAFFIC CURB

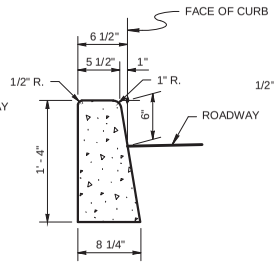

CEMENT CONCRETE
TRAFFIC CURB

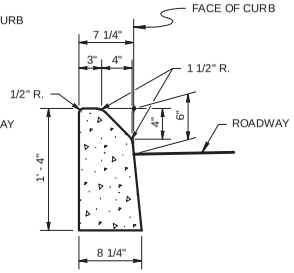

MOUNTABLE CEMENT
CONCRETE TRAFFIC CURB

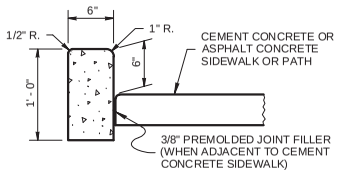

CEMENT CONCRETE
PEDESTRIAN CURB

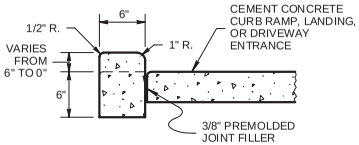

CEMENT CONCRETE
PEDESTRIAN CURB
AT CURB RAMPS, LANDINGS,
AND DRIVEWAY ENTRANCES

City of Bothell

City of Bothell
PUBLIC WORKS DEPARTMENT

Approved By:
City Engineer

CEMENT CONCRETE CURBS

Standard Detail
340
Revision Date
Feb, 2012

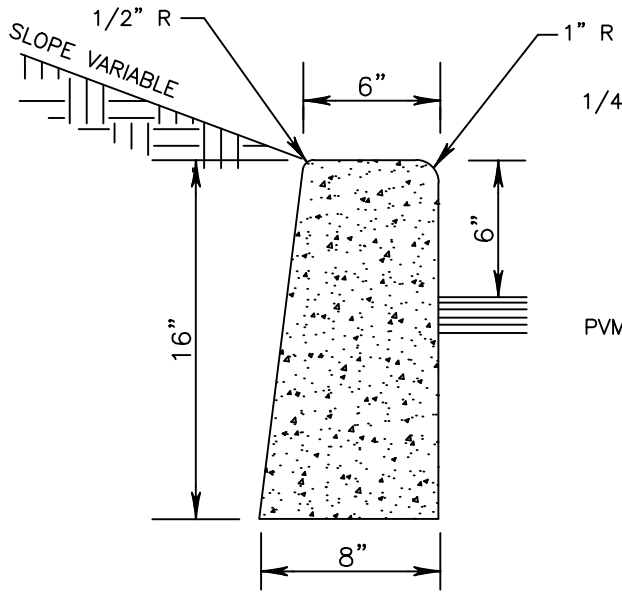

TYPE E-1 CURB

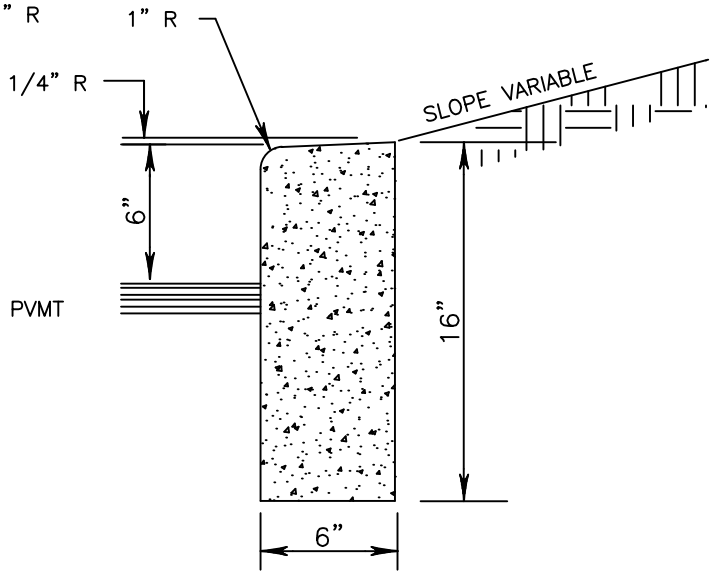

TYPE E-2 CURB

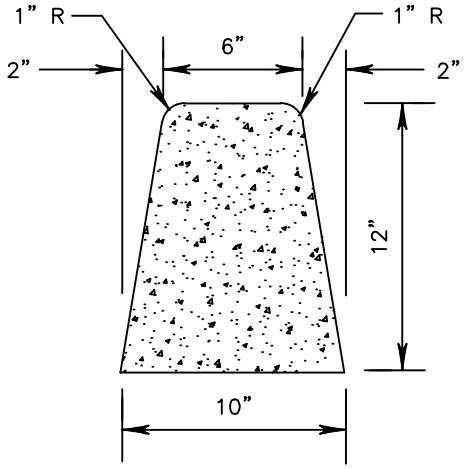

TYPE E-3 CURB

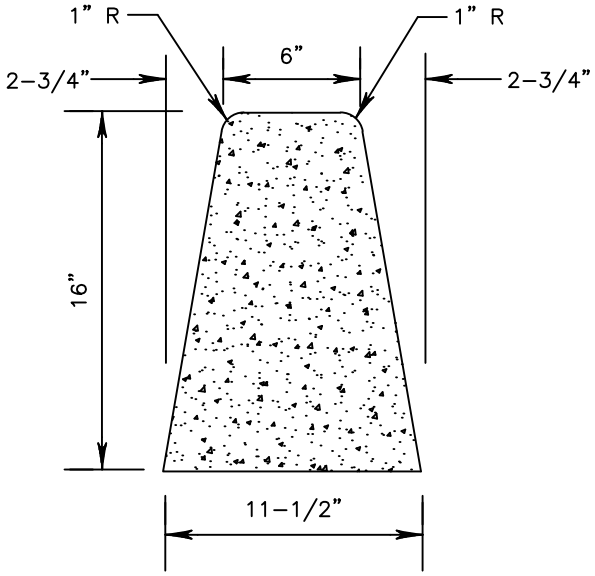

TYPE E-4 CURB

City of Bothell	**City of Bothell** **PUBLIC WORKS DEPARTMENT**	Approved By: City Engineer	CONCRETE CURB TYPE E-1, E-2, E-3, E-4	Standard Detail **341** Revision Date Feb, 2012

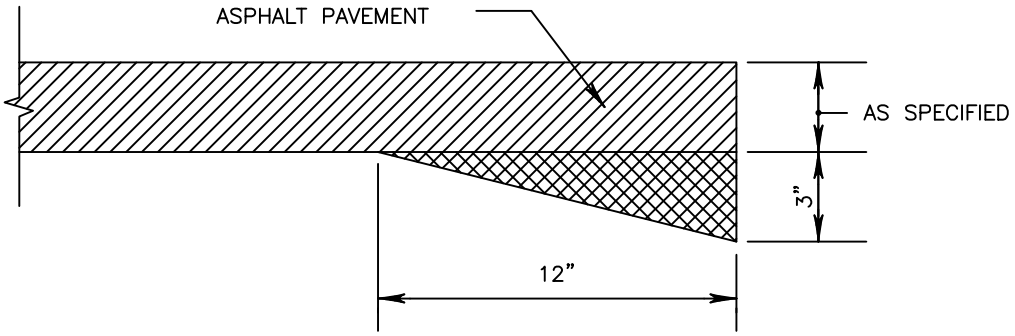

THICKENED EDGE FOR ASPHALT PAVEMENT

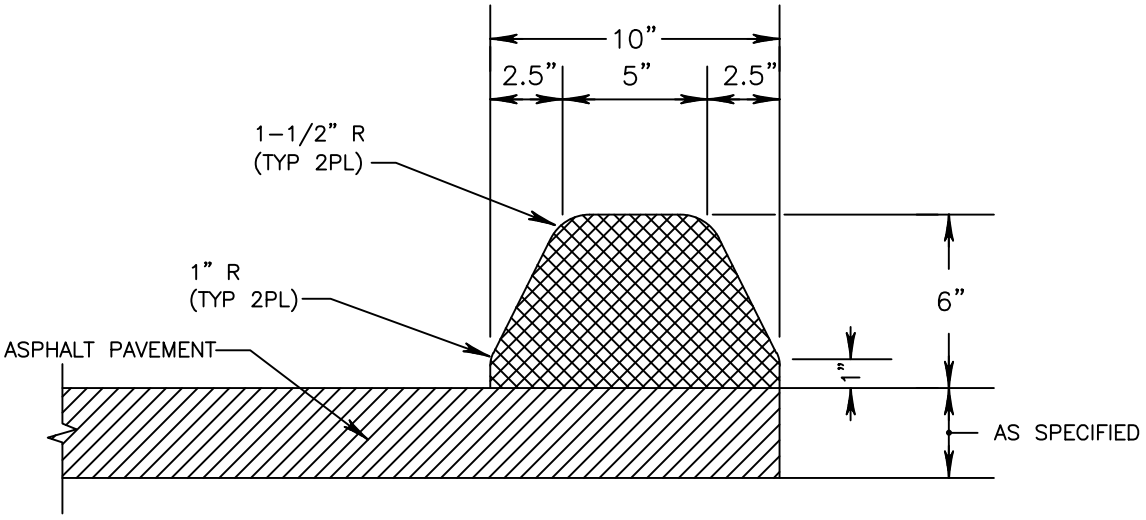

EXTRUDED ASPHALT CONCRETE CURB

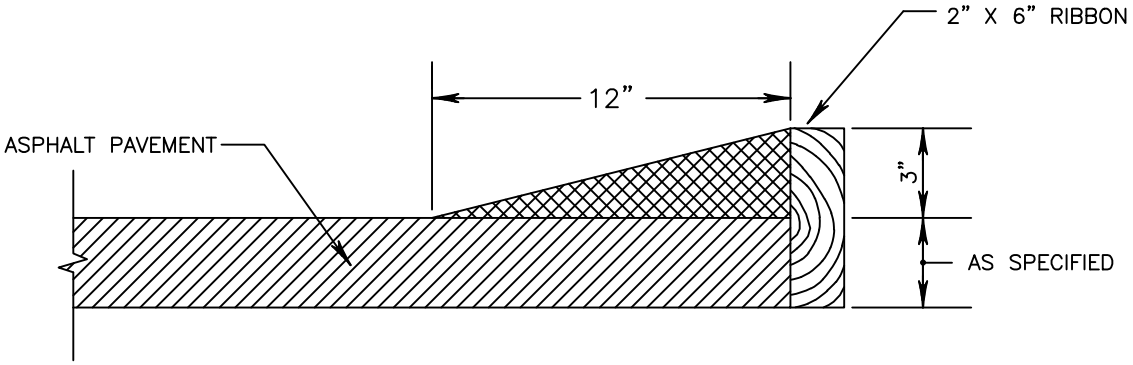

ASPHALT WEDGE CURB

City of Bothell	**City of Bothell** **PUBLIC WORKS DEPARTMENT**	Approved By: City Engineer	EXTRUDED ASPHALT CONCRETE SECTIONS	Standard Detail **342** Revision Date Feb, 2012

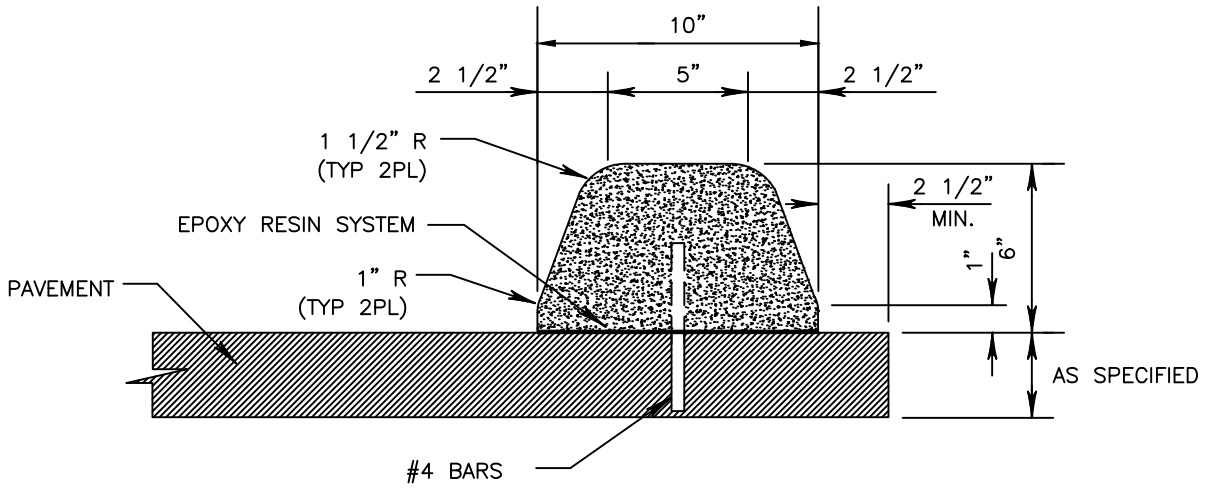

EXTRUDED CEMENT CONCRETE CURB

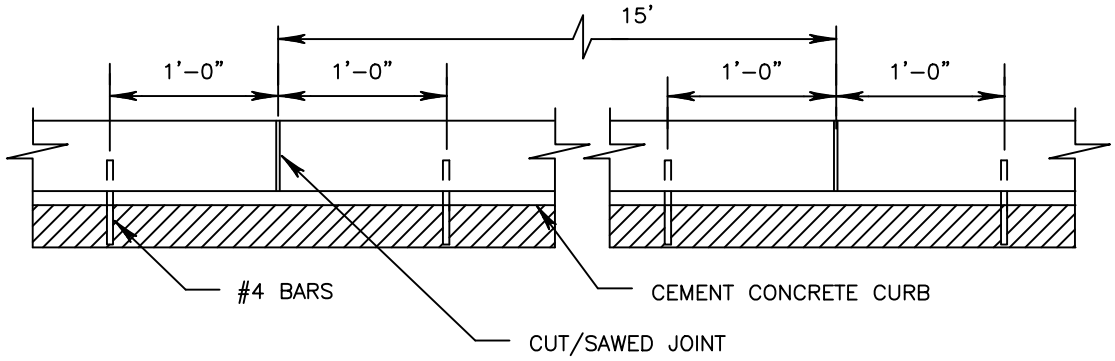

SPACING OF ANCHOR BARS

NOTES:

1. CONTROL JOINTS SHALL BE PLACED NOT TO EXCEED 10' CLS. THRU JOINTS SHALL BE PLACED ONLY AT POINTS OF TANGENCY ON STREET ALLEY AND DRIVEWAY RETURNS AND WHERE EXPANSION JOINTS OCCUR IN THE PAVEMENT SLAB.
2. CONCRETE SHALL BE CLASS 3000 OR COMMERCIAL WITH AIR-ENTRAINMENT.
3. CONCRETE CURBS SHALL BE ANCHORED TO THE EXISTING PAVEMENT BY PLACING STEEL TIE BARS 1 FOOT ON EACH SIDE OF EVERY JOINT AND BY USING AN ADHESIVE. THE ADHESIVE SHALL MEET THE REQUIREMENTS OF SECTION 9-20 OF THE WSDOT/APWA STANDARD SPECIFICATIONS FOR TYPE II EPOXY RESIN.

City of Bothell™	**City of Bothell** **PUBLIC WORKS DEPARTMENT**	Approved By: City Engineer	EXTRUDED CEMENT CONCRETE CURB	Standard Detail **343** Revision Date Nov, 2013

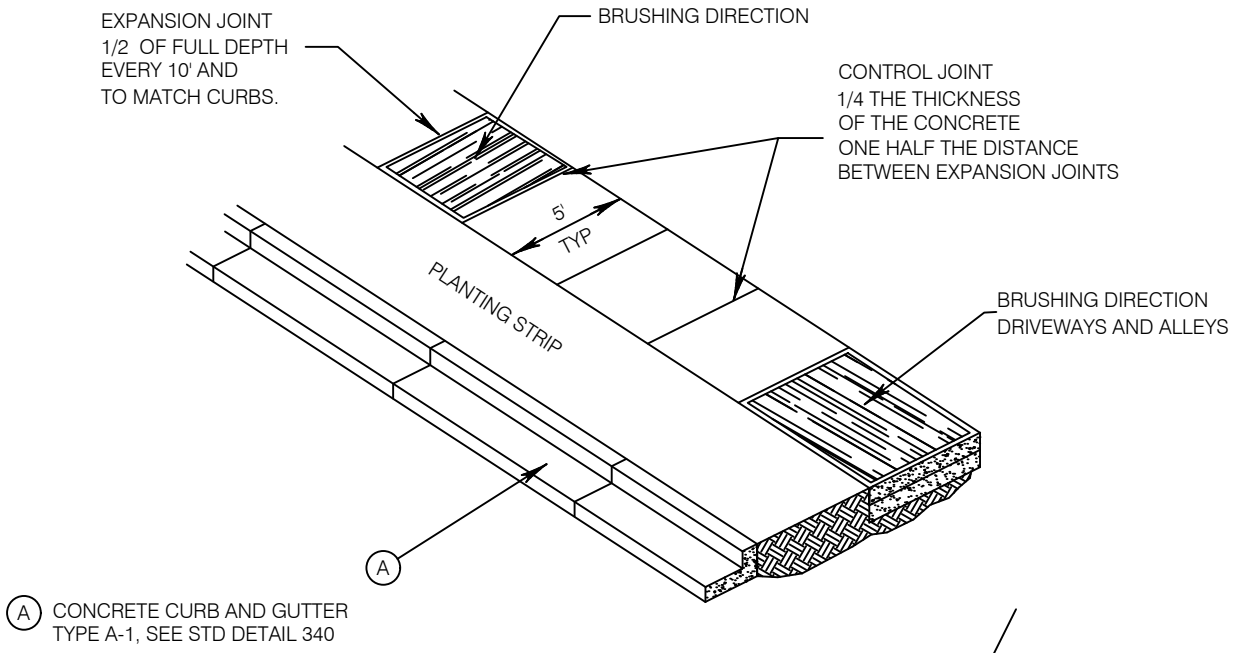

ISOMETRIC VIEW

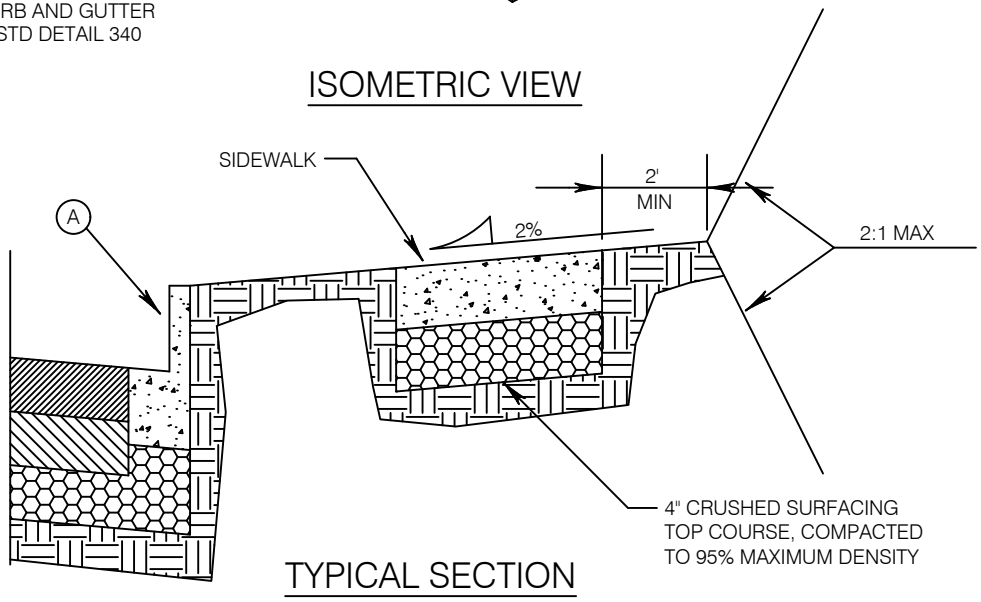

TYPICAL SECTION

NOTES

1. SIDEWALKS ARE TYPICALLY 5' WIDE AND A MINIMUM DEPTH OF 4". SEE TYPICAL SECTION FOR EXACT DIMENSIONS.

2. THE SIDEWALK AREA THROUGH THE DRIVEWAY SHALL BE 6" THICK. SEE DETAILS 346 AND 347 FOR THIS AREA.

3. SIDEWALKS SHALL ALL BE CLASS 4000 CEMENT CONCRETE, WITH AIR ENTRAINMENT (MIN. 4%, MAX. 8%).

4. SUB GRADE SHALL BE COMPACTED TO NOT LESS THAN 95% OF MAXIMUM DENSITY.

5. SIDEWALK JOINTS SHALL BE EDGED WITH A 1/4" INCH RADIUS EDGER.
   SIDEWALK EDGES SHALL BE TOOLED WITH A 1/2" INCH RADIUS EDGER.

6. THE FINISHED SURFACE SHALL BE BRUSHED IN A TRANSVERSE DIRECTION EXCEPT THAT AREA AT DRIVEWAYS AND ALLEY CROSSINGS, WHERE IT SHALL BE BRUSHED LONGITUDINALLY.

7. THE FINISHED SIDEWALK SHALL BE SPRAYED WITH A TRANSPARENT CURING COMPOUND COVERED BY WATERPROOF PAPER OR PLASTIC SHEETING IN THE EVENT OF RAIN OR OTHER INCLEMENT WEATHER. CURING TIME SHALL BE FOR A MINIMUM OF 72 HOURS.

City of Bothell™	**City of Bothell** **PUBLIC WORKS DEPARTMENT**	Approved By: City Engineer	CONCRETE SIDEWALK DETAIL	Standard Detail **344** Revision Date Dec, 2016

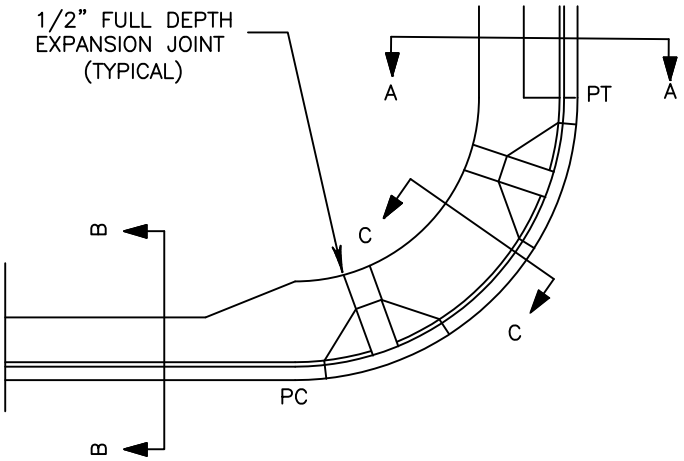

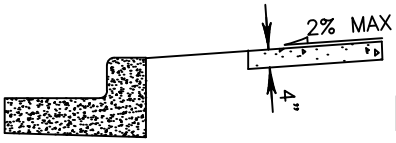

SECTION A-A

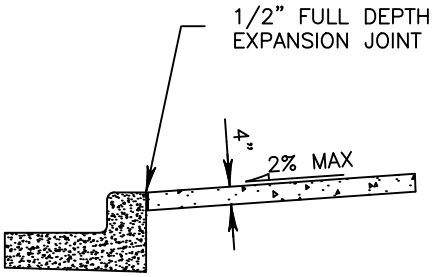

SECTION B-B

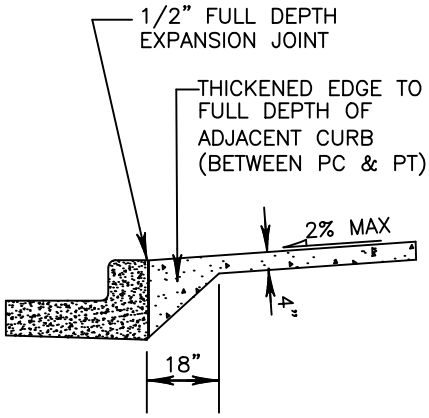

SECTION C-C

NOTES:

1. CONTROL JOINTS SHALL BE SPACED TO CORRESPOND TO THE MARKINGS IN EXISTING SIDEWALKS, OR AS DIRECTED BY THE DIRECTOR.
2. ALL UTILITY POLES, METER BOXES AND OTHER OBSTRUCTIONS SHALL HAVE 1/2" EXPANSION JOINT MATERIAL PLACED AROUND THEM.
3. ALL SIDEWALK EDGES SHALL HAVE 1/2"RADIUS.
4. MINIMUM WIDTH OF SIDEWALK IS 5' (NOT INCLUDING THE WIDTH OF THE CURB OR POLES).
5. THICKENED EDGES ARE REQUIRED FOR SIDEWALKS AT CORNERS, BUT NOT ON TANGENT SECTIONS. ALL CURB RAMPS SHALL HAVE A THICKENED EDGE TO THE DEPTH OF THE ADJACENT CURB, INCLUDING CURB RAMPS BUILT ON TANGENT SECTIONS OF SIDEWALK. WHEN MONOLITHIC CURB AND SIDEWALK IS APPROVED FOR USE, THICKENED EDGES ARE REQUIRED AT ALL LOCATIONS.
6. FOR WHEELCHAIR RAMP USE STD DETAILS 350 OR 351 OR 352 OR 353.

City of Bothell™	**City of Bothell** **PUBLIC WORKS DEPARTMENT**	Approved By: City Engineer	CONCRETE SIDEWALK CORNER TREATMENT	Standard Detail **345** Revision Date Dec, 2016

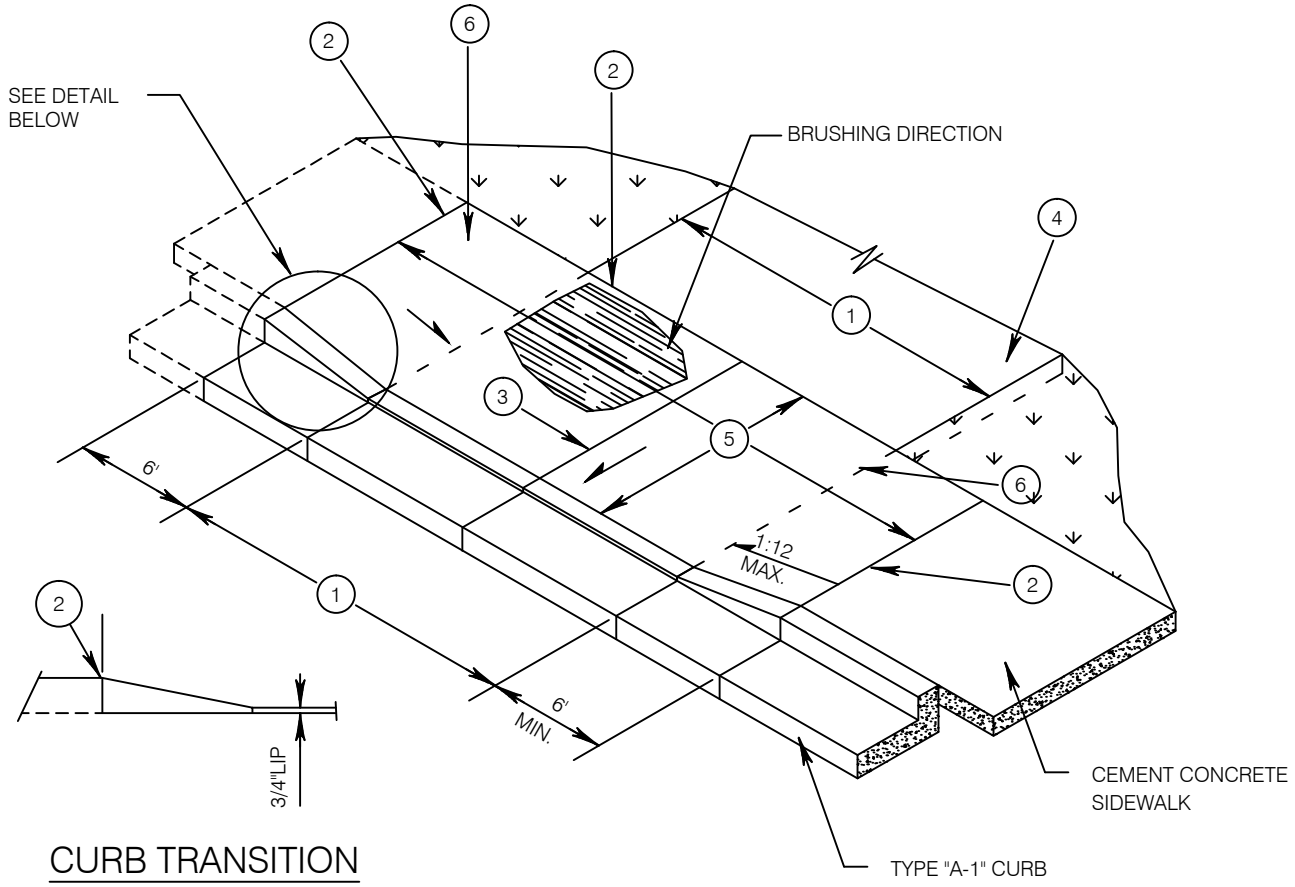

CURB TRANSITION DETAIL

ISOMETRIC VIEW

1. EQUALS WIDTH OF DRIVEWAY AT PROPERTY LINE. MINIMUM WIDTH = 14' (REF. 3-4.2(6))
2. 1/2" WIDE FULL DEPTH EXPANSION JOINT.
3. FULL DEPTH EXPANSION JOINT IF (1) IS 10' OR GREATER.
4. DRIVEWAY TO BE SURFACED WITH ASPHALT OR CONCRETE.
5. DRIVEWAY WIDTH AREA. SEE PLANS FOR EXACT DIMENSIONS
6. MAXIMUM SLOPE 8.33% UNLESS MAXIMUM EXTENT FEASIBLE ANALYSIS IS APPROVED BY CITY OF BOTHELL

NOTES

1. DRIVEWAY CEMENT CONCRETE SHALL BE A MIN OF 6" THICK AND IS TO BE PLACED ON A MINIMUM OF 4" CRUSHED SURFACING TOP COURSE COMPACTED TO 95% MAXIMUM DENSITY.

2. DRIVEWAY SHALL ALL BE CLASS 4000 CEMENT CONCRETE, WITH AIR ENTRAINMENT (MIN. 4%, MAX. 8%).

3. DRIVEWAY AND ALLEY CROSSINGS SHALL BE BRUSHED LONGITUDINALLY.

4. DRIVEWAY JOINTS SHALL BE EDGED WITH A 1/4" INCH RADIUS EDGER.
DRIVEWAY EDGES SHALL BE TOOLED WITH A 1/2" INCH RADIUS EDGER.

5. THE FINISHED DRIVEWAY SHALL BE SPRAYED WITH A TRANSPARENT CURING COMPOUND COVERED BY WATERPROOF PAPER OR PLASTIC SHEETING IN THE EVENT OF RAIN OR OTHER INCLEMENT WEATHER. CURING TIME SHALL BE FOR A MINIMUM OF 72 HOURS.

City of Bothell™	**City of Bothell** **PUBLIC WORKS DEPARTMENT**	Approved By: City Engineer	CEMENT CONCRETE DRIVEWAY TYPE - 1	Standard Detail **346** Revision Date Jun, 2015

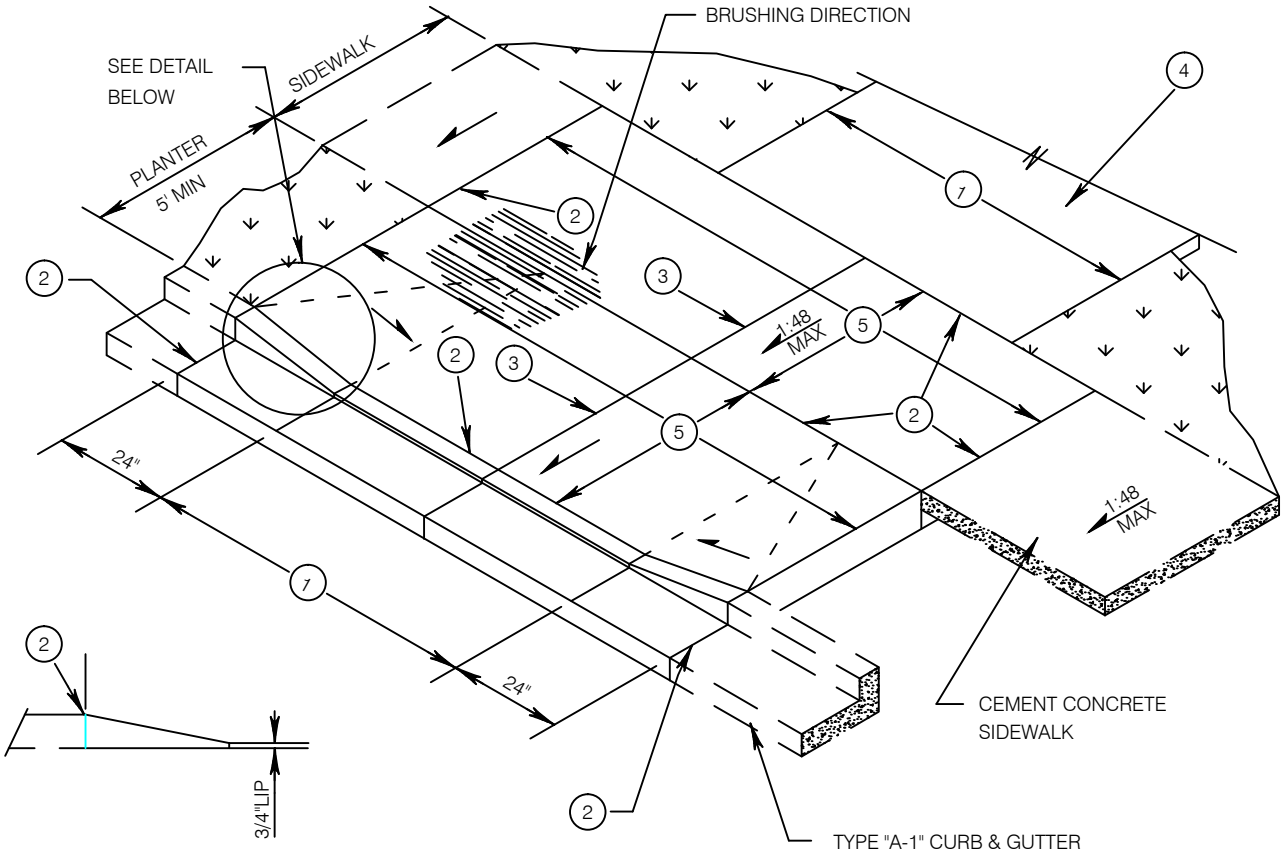

CURB TRANSITION DETAIL

ISOMETRIC VIEW

1. EQUALS WIDTH OF DRIVEWAY AT PROPERTY LINE. MINIMUM WIDTH = 14' (REF. 3-4.2(6))
2. 1/2" WIDE FULL DEPTH EXPANSION JOINT.
3. FULL DEPTH EXPANSION JOINT IF (1) IS 10' OR GREATER.
4. DRIVEWAY TO BE SURFACED WITH ASPHALT OR CONCRETE.
5. DRIVEWAY WIDTH AREA. SEE PLANS FOR EXACT DIMENSIONS

NOTES

1. DRIVEWAY CEMENT CONCRETE SHALL BE A MIN OF 6" THICK AND IS TO BE PLACED ON A MINIMUM OF 4" CRUSHED SURFACING TOP COURSE COMPACTED TO 95% MAXIMUM DENSITY.

2. DRIVEWAY SHALL ALL BE CLASS 4000 CEMENT CONCRETE, WITH AIR ENTRAINMENT (MIN. 4%, MAX. 8%).

3. DRIVEWAY AND ALLEY CROSSINGS SHALL BE BRUSHED LONGITUDINALLY.

4. DRIVEWAY JOINTS SHALL BE EDGED WITH A 1/4" INCH RADIUS EDGER.
DRIVEWAY EDGES SHALL BE TOOLED WITH A 1/2" INCH RADIUS EDGER.

5. THE FINISHED DRIVEWAY SHALL BE SPRAYED WITH A TRANSPARENT CURING COMPOUND COVERED BY WATERPROOF PAPER OR PLASTIC SHEETING IN THE EVENT OF RAIN OR OTHER INCLEMENT WEATHER. CURING TIME SHALL BE FOR A MINIMUM OF 72 HOURS.

City of Bothell™	**City of Bothell** **PUBLIC WORKS DEPARTMENT**	Approved By: City Engineer	CEMENT CONCRETE DRIVEWAY TYPE - 2	Standard Detail **347** Revision Date Jun, 2015

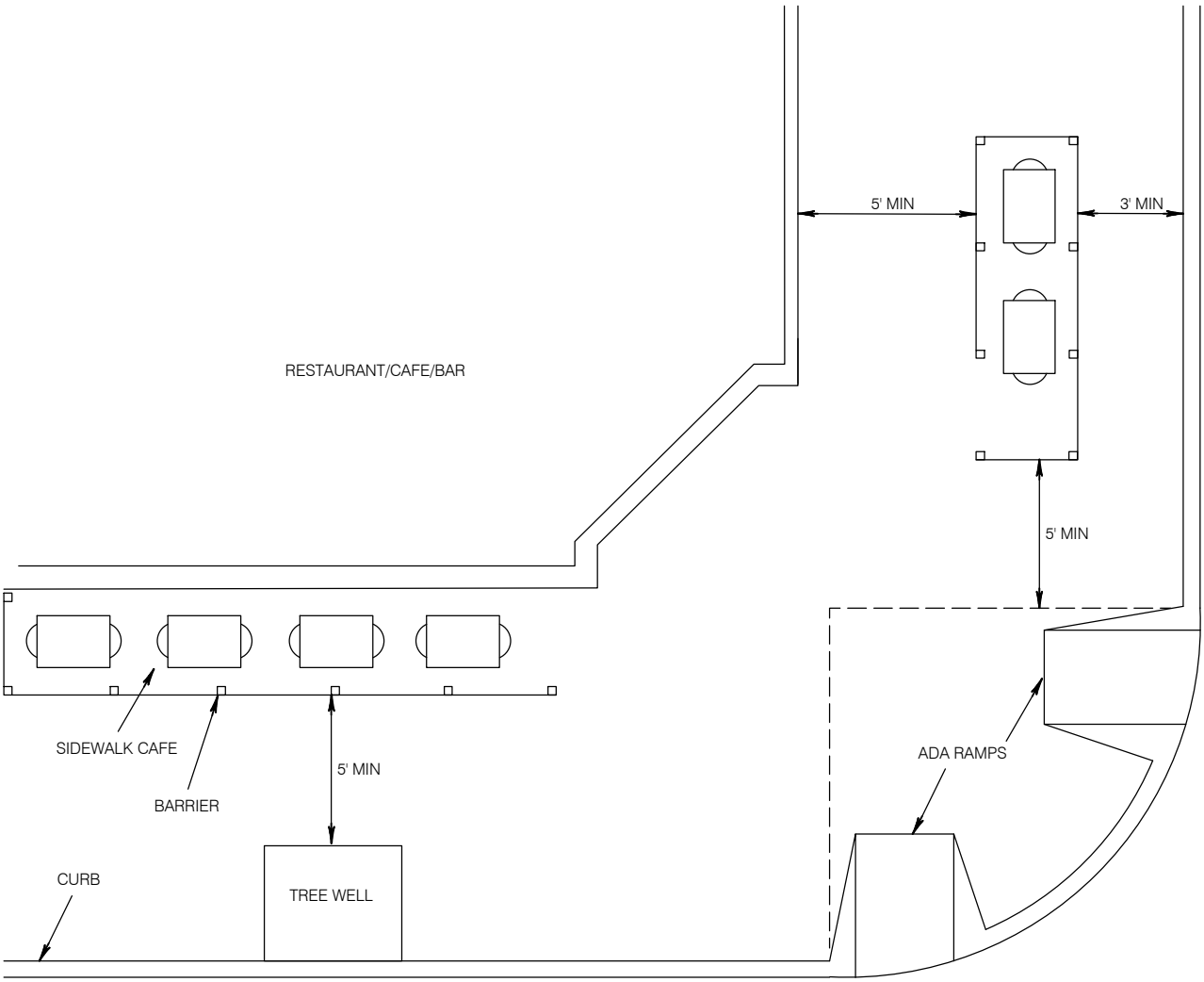

NOTES:

1. PUBLIC AREA USE PERMIT REQUIRED PRIOR TO CONSTRUCTION OF PERMANENT ENCLOSURE.

2. MUST COMPLY WITH ALL LIQUOR CONTROL BOARD REQUIREMENTS REGARDING SIDEWALK CAFE AREAS SERVING ALCOHOL.

3. BARRIER CONSTRUCTION PLANS MUST BE APPROVED BY CITY PRIOR TO INSTALLATION.

5. SIDEWALK CAFE RAILINGS AND FURNISHINGS SHALL HAVE HIGH QUALITY, WEATHER RESISTANT MATERIALS AND FINISHES.

6. RAILINGS SHALL BE DESIGNED TO MINIMIZE DISTURBANCE OF SIDEWALK FINISHES, AND ANY HOLES SHALL BE PATCHED TO MATCH EXISTING WHEN REMOVED.

7. RAILINGS SHOULD BE DESIGNED WITH A BOTTOM RAIL 4 TO 6 INCHES ABOVE THE SIDEWALK GRADE.

City of Bothell	**City of Bothell** **PUBLIC WORKS DEPARTMENT**	Approved By: City Engineer	SIDEWALK CAFE	Standard Detail **349** Revision Date Dec, 2015

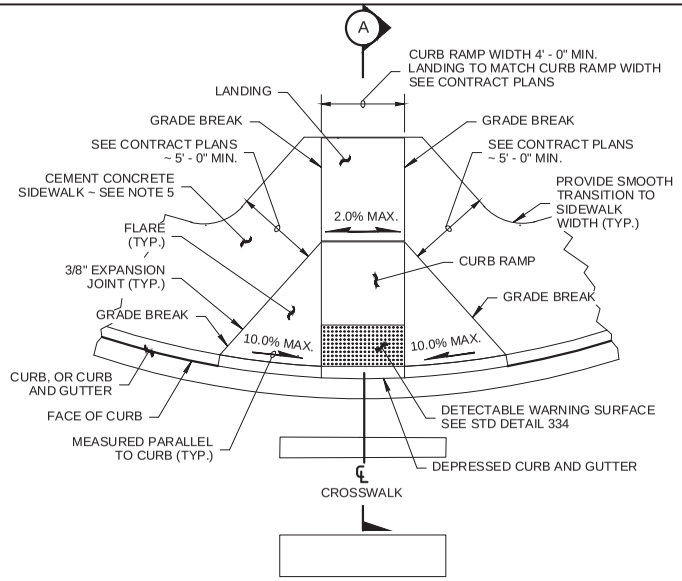

PLAN VIEW
TYPE PERPENDICULAR A

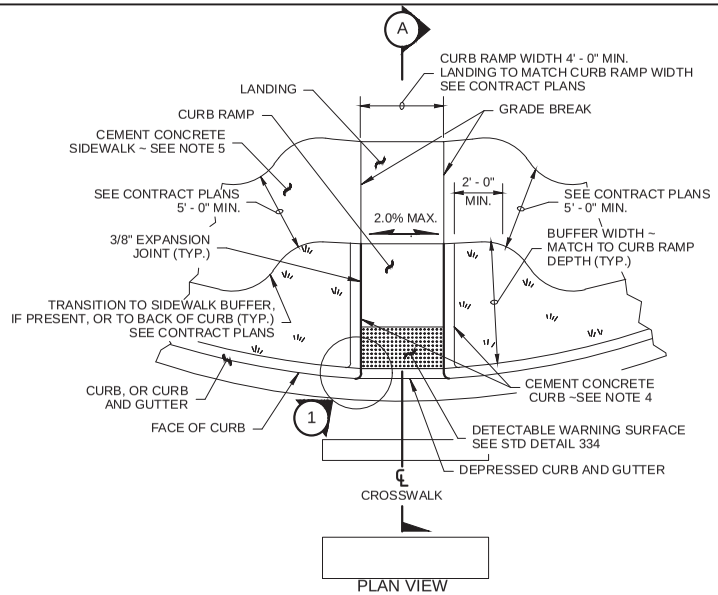

PLAN VIEW
TYPE PERPENDICULAR B
(SHOWN WITH BUFFER)

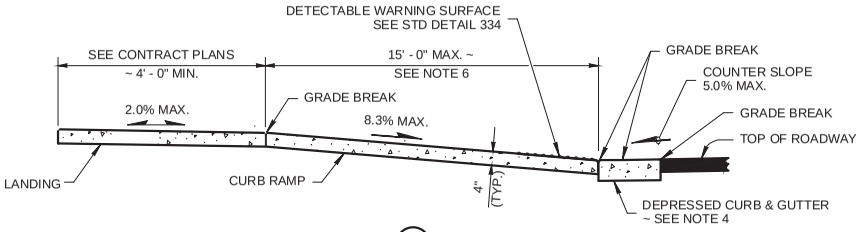

SECTION A

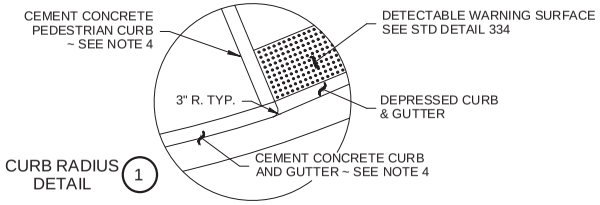

CURB RADIUS DETAIL 1

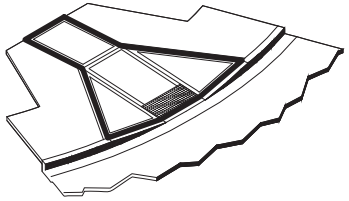

ISOMETRIC VIEW
TYPE A

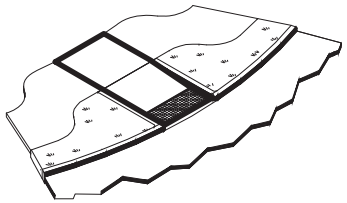

ISOMETRIC VIEW
TYPE B

NOTES:

1. Provide a separate curb ramp for each marked or unmarked crosswalk. Curb ramp location shall be placed within the width of the associated crosswalk, or as shown in the Contract Plans.
2. Where "GRADE BREAK" is called out, the entire length of the grade break between the two adjacent surface planes shall be flush.
3. Do not place gratings, junction boxes, access covers, or other appurtenances in front of the curb ramp or on any part of the curb ramp or landing.
4. See the Contract Plans for the curb design specified. See Std Detail 340 for Curb, and Curb and Gutter Details.
5. See Std Detail 344 for Cement Concrete Sidewalk Details. See Contract Plans for width and placement of sidewalk.
6. The curb ramp maximum running slope shall not require the ramp length to exceed 15 feet to avoid chasing the slope indefinitely when connecting to steep grades. When applying the 15 foot max. length, the running slope of the curb ramp shall be as flat as feasible.
7. Curb ramp, landing, & flares shall receive broom finish. See WSDOT Standard Specifications 8-14.

LEGEND:

SLOPE IN EITHER DIRECTION

City of Bothell

City of Bothell
PUBLIC WORKS DEPARTMENT

Approved By:
City Engineer

PERPENDICULAR
CURB RAMP

Standard Detail
350
Revision Date
Feb, 2012

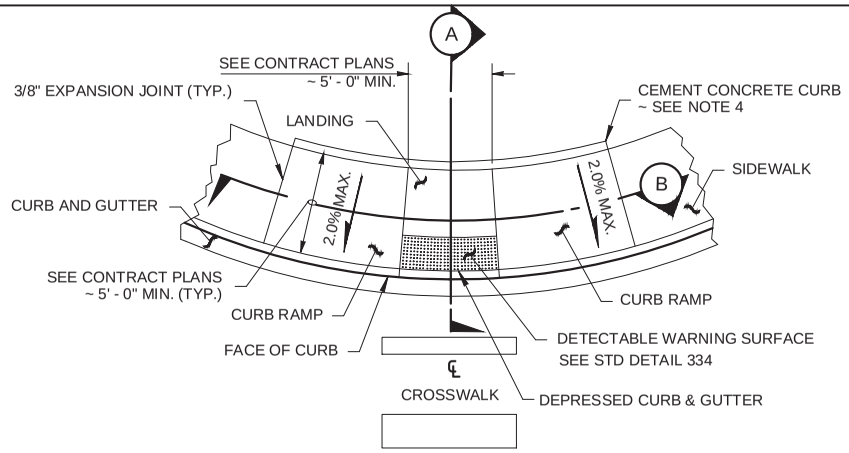

PLAN VIEW
TYPE PARALLEL A

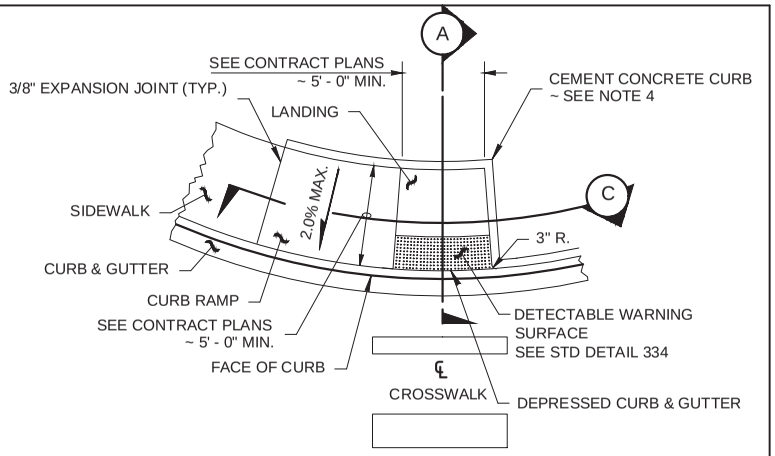

PLAN VIEW
TYPE PARALLEL B

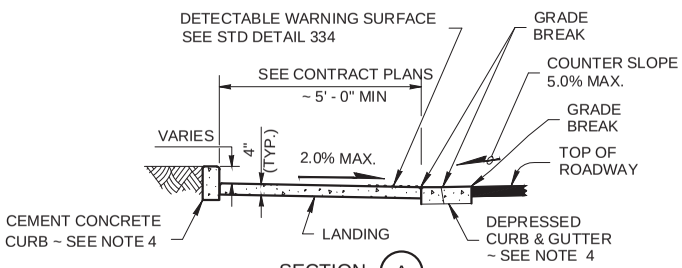

SECTION A

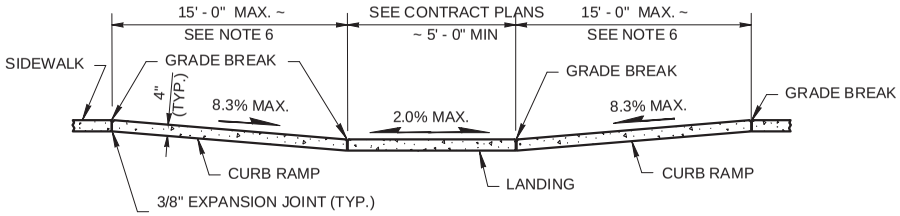

SECTION B

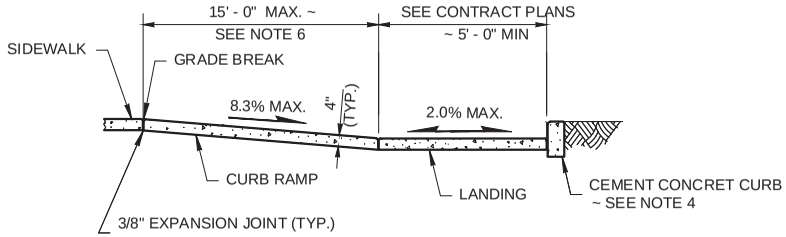

SECTION C

NOTES:

1. Provide a separate curb ramp for each marked or unmarked crosswalk. Curb ramp location shall be placed within the width of the associated crosswalk, or as shown in the Contract Plans.
2. Where "GRADE BREAK" is called out, the entire length of the grade break between the two adjacent surface planes shall be flush.
3. Do not place gratings, junction boxes, access covers, or other appurtenances in front of the curb ramp or on any part of the curb ramp or landing.
4. See the Contract Plans for the curb design specified.d. See Std Detail 340 for Curb, and Curb and Gutter Curb Details.
5. See Std Detail 344 for Cement Concrete Sidewalk Details. See Contract Plans for width and placement of sidewalk.
6. The curb ramp maximum running slope shall not require the ramp length to exceed 15 feet to avoid chasing the slope indefinitely when connecting to steep grades. When applying the 15 foot max. length, the running slope of the curb ramp shall be as flat as feasible.
7. Curb ramp, landing, & flares shall receive broom finish. See WSDOT Standard Specifications 8-14.

LEGEND:

SLOPE IN EITHER DIRECTION

City of Bothell

City of Bothell
PUBLIC WORKS DEPARTMENT

Approved By:
City Engineer

PARALLEL
CURB RAMP

Standard Detail
351
Revision Date
Feb, 2012

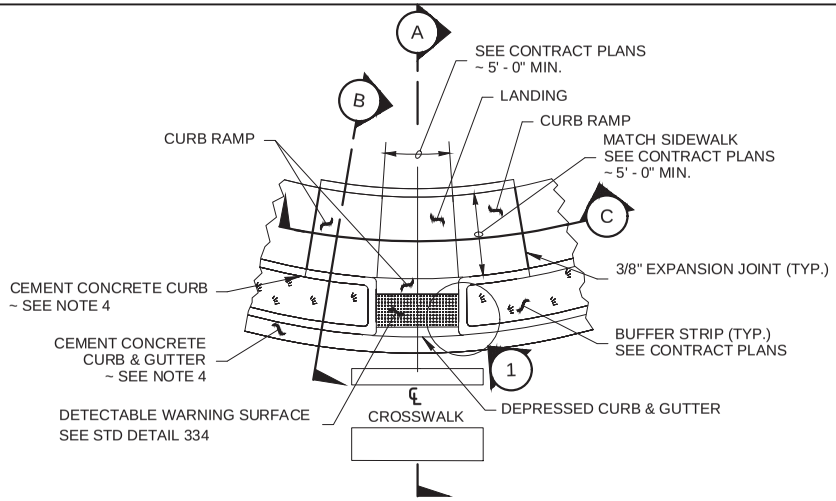

PLAN VIEW

TYPE COMBINATION

WITH BUFFER

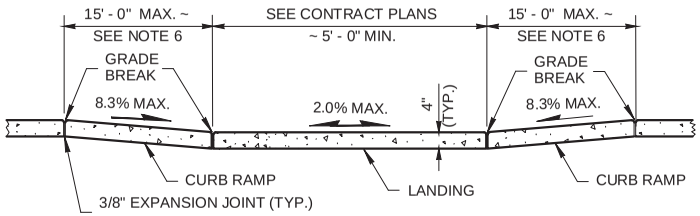

SECTION C

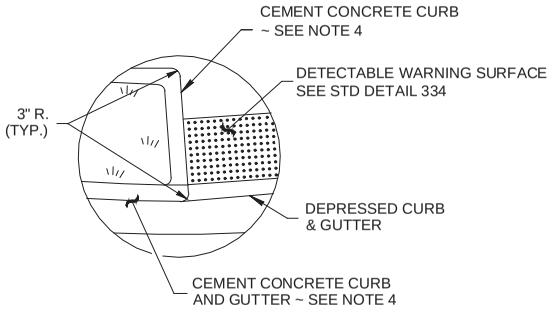

CURB RADIUS DETAIL 1

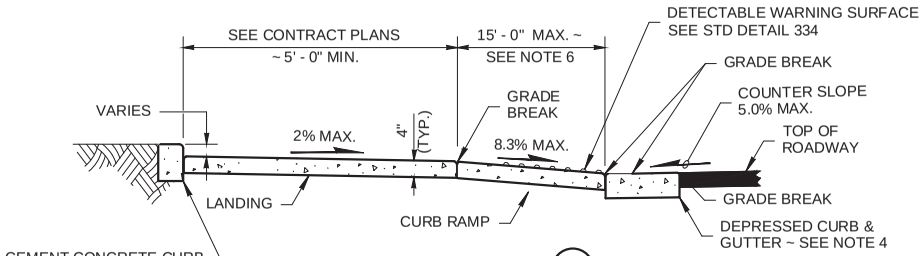

SECTION A

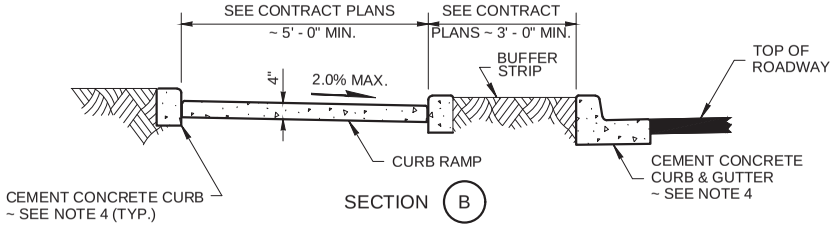

SECTION B

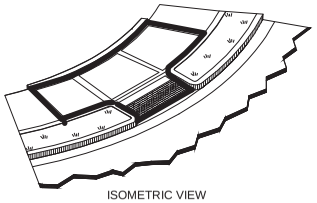

ISOMETRIC VIEW

NOTES:

1. Provide a separate curb ramp for each marked or unmarked crosswalk. Curb ramp location shall be placed within the width of the associated crosswalk, or as shown in the Contract Plans.
2. Where "GRADE BREAK" is called out, the entire length of the grade break between the two adjacent surface planes shall be flush.
3. Do not place gratings, junction boxes, access covers, or other appurtenances in front of the curb ramp or on any part of the curb ramp or landing.
4. See the Contract Plans for the curb design specified. See Std Detail 340 for Curb, and Curb and Gutter Details.
5. See Std Detail 344 for Cement Concrete Sidewalk Details. See Contract Plans for width and placement of sidewalk.
6. The curb ramp maximum running slope shall not require the ramp length to exceed 15 feet to avoid chasing the slope indefinitely when connecting to steep grades. When applying the 15 foot max. length, the running slope of the curb ramp shall be as flat as feasible.
7. Curb ramp, landing, & flares shall receive broom finish. See WSDOT Standard Specifications 8-14.

LEGEND:

SLOPE IN EITHER DIRECTION

City of Bothell

City of Bothell

PUBLIC WORKS DEPARTMENT

Approved By:

City Engineer

COMBINATION
CURB RAMP

Standard Detail

352

Revision Date
Feb, 2012

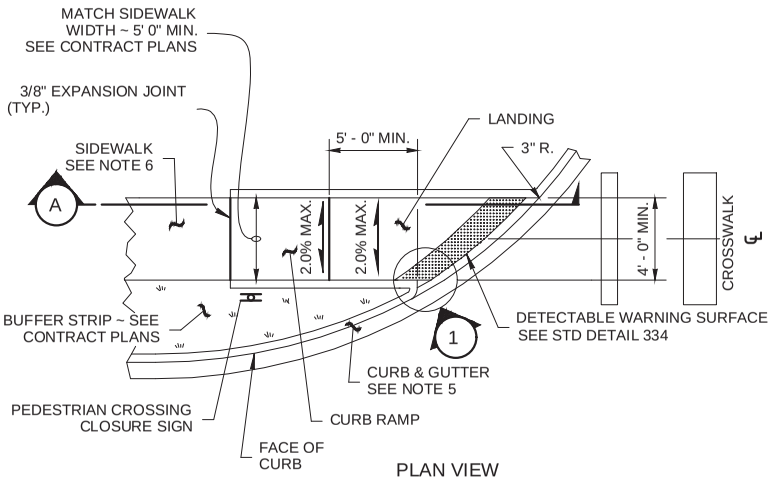

PLAN VIEW

TYPE SINGLE DIRECTION A

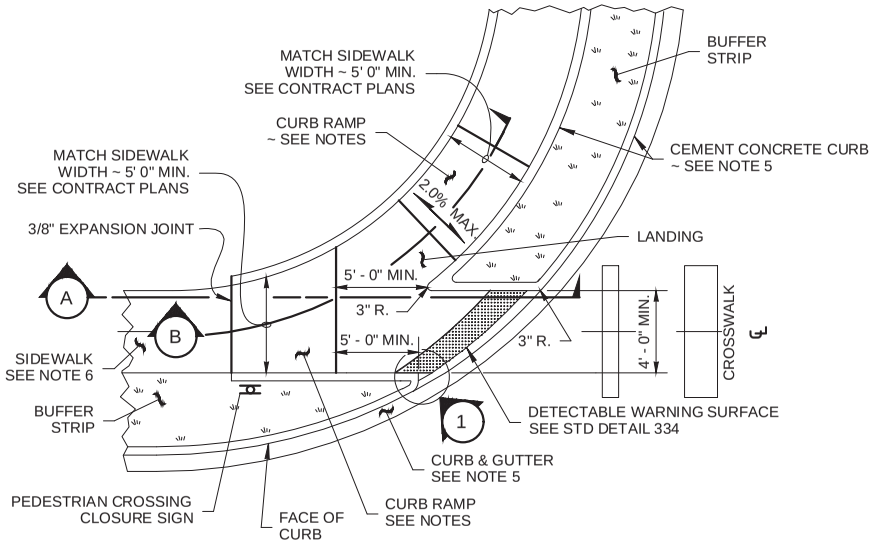

PLAN VIEW

TYPE SINGLE DIRECTION B

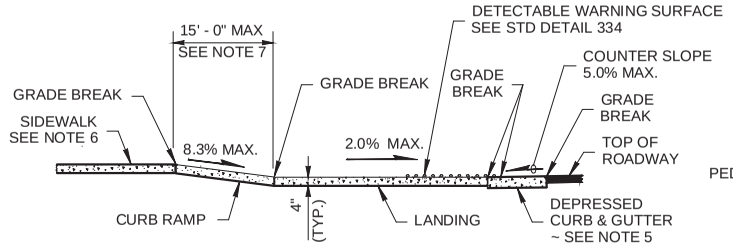

SECTION A

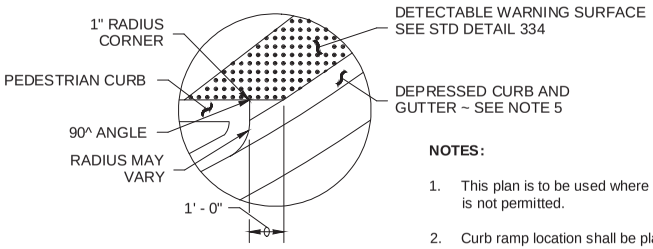

DETAIL 1

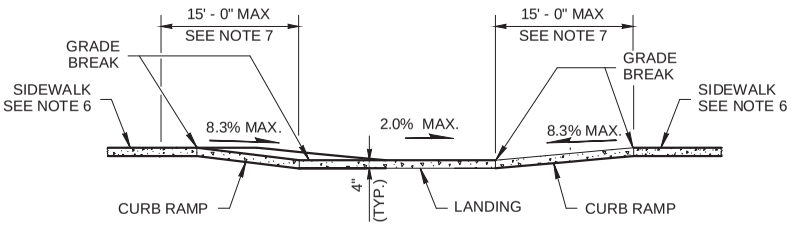

SECTION B

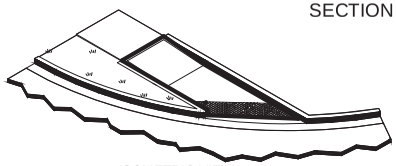

ISOMETRIC VIEW

DIRECTION A

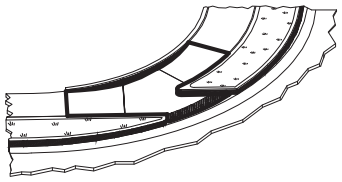

ISOMETRIC VIEW

DIRECTION B

NOTES:

1. This plan is to be used where pedestrian crossing in one direction is not permitted.
2. Curb ramp location shall be placed within the width of the associated crosswalk, or as shown in the Contract Plans.
3. Where "GRADE BREAK" is called out, the entire length of the grade break between the two adjacent surface planes shall be flush.
4. Do not place gratings, junction boxes, access covers, or other appurtenances in front of the curb ramp or on any part of the curb ramp or landing.
4. See the Contract Plans for the curb design specified. See Std Detail 340 for Curb, and Curb and Gutter Details.
5. See Std Detail 344 for Cement Concrete Sidewalk Details. See Contract Plans for width and placement of sidewalk.
6. The curb ramp maximum running slope shall not require the ramp length to exceed 15 feet to avoid chasing the slope indefinitely when connecting to steep grades. When applying the 15 foot max. length, the running slope of the curb ramp shall be as flat as feasible.
7. Curb ramp, landing, & flares shall receive broom finish. See WSDOT Standard Specifications 8-14.

LEGEND:

SLOPE IN EITHER DIRECTION

City of Bothell

City of Bothell

PUBLIC WORKS DEPARTMENT

Approved By:

City Engineer

SINGLE DIRECTION CURB RAMP

Standard Detail

353

Revision Date

Feb, 2012

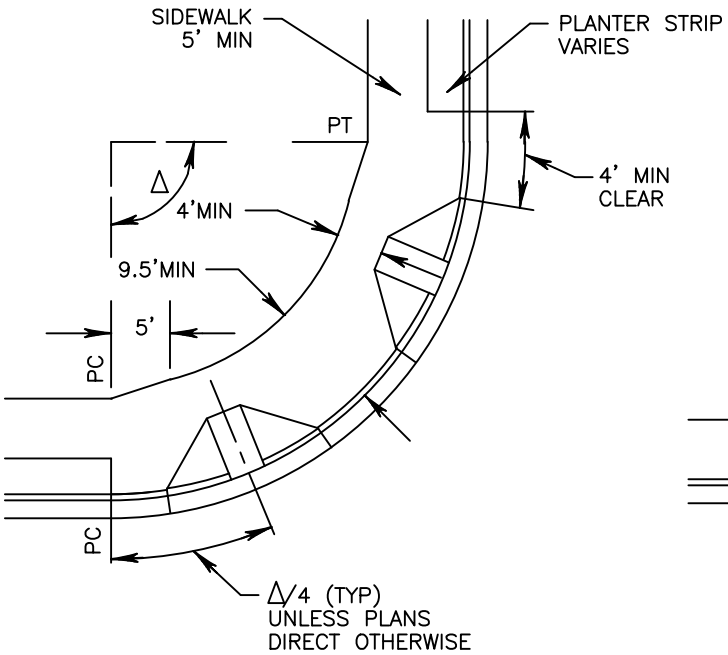

WITH LANDSCAPE STRIP

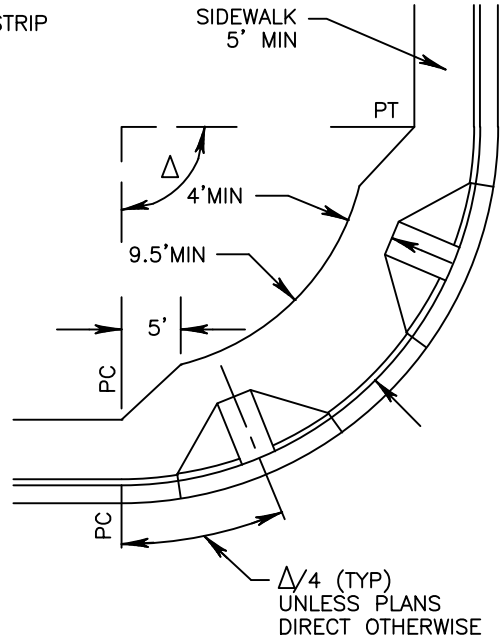

WITHOUT LANDSCAPE STRIP

CURB RAMP FOR ARTERIAL OR COLLECTOR STREETS

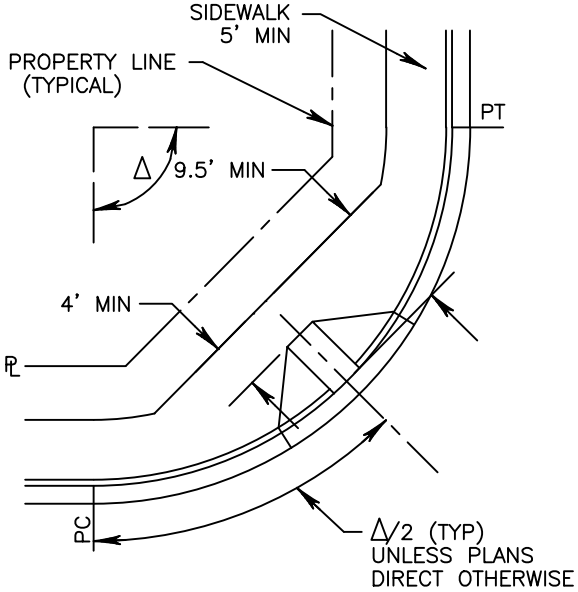

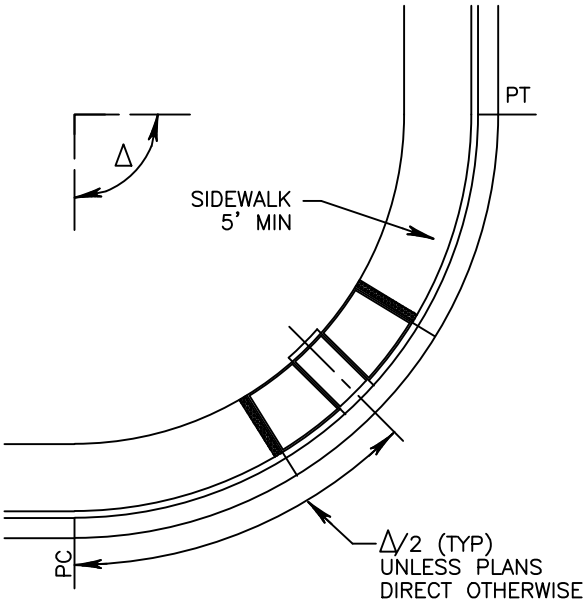

CURB RAMP FOR LOCAL STREETS

City of Bothell	**City of Bothell** **PUBLIC WORKS DEPARTMENT**	Approved By: City Engineer	WHEELCHAIR RAMP TYPICAL LOCATIONS	Standard Detail **354** Revision Date Feb, 2012

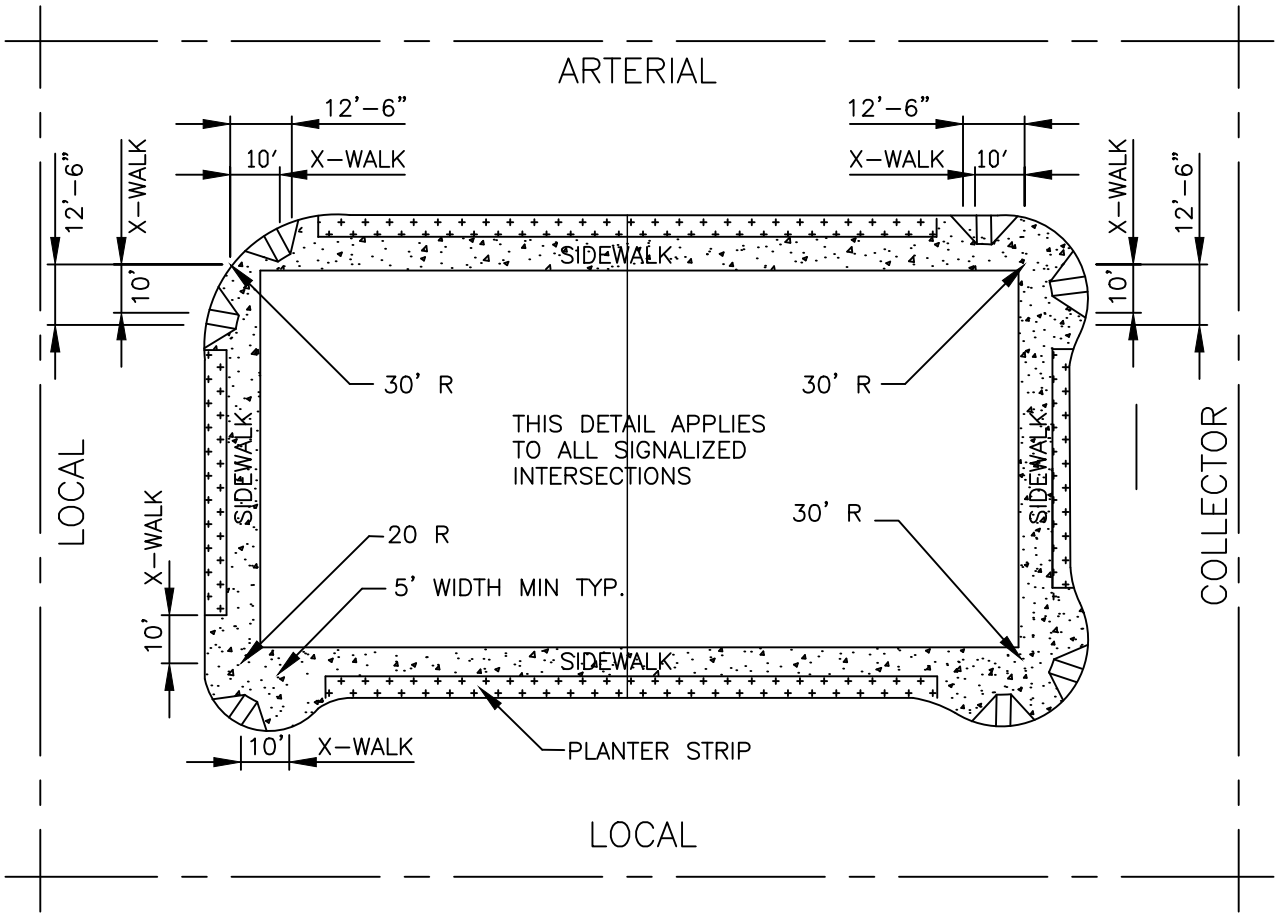

CURB RADIUS AT INTERSECTIONS

	ARTERIAL	COLLECTOR	LOCAL
ARTERIAL	35'	30'	30'
COLLECTOR	X	25'	30'
LOCAL	X	X	20'

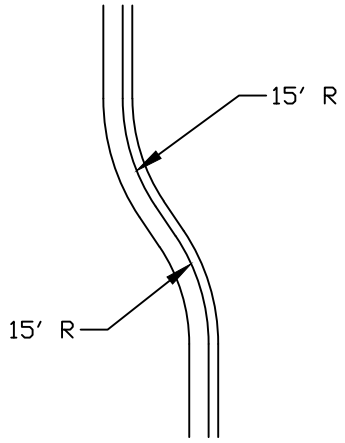

DETAIL A – MINIMUM RADIUS FOR CURB BULB/PARKING SETBACK

NOTES

1. STORM DRAINAGE INLETS SHALL BE OUTSIDE THE CURB RAMP.
2. THE CURB RAMP MAY BE MOVED AWAY FROM THE CROSSWALK TO AVOID CONFLICTS WITH HYDRANTS, POLES, INLETS OR OTHER UTILITIES, EXCEPT WHERE THE STREET GRADE EXCEEDS 4%.
3. FOR SWEEPING EFFICIENCY WHEN CURB BULBS (PARKING SETBACKS) ARE USED, REVERSE CURVE RADII SHALL NOT BE LESS THAN 15 FEET. REFER TO DETAIL A.
4. ADD CURB BULBS ON STREETS WITH ON-STREET PARKING

City of Bothell™	**City of Bothell** **PUBLIC WORKS DEPARTMENT**	Approved By: City Engineer	INTERSECTION CURB RADIUS & RAMP LOCATIONS	Standard Detail **355** Revision Date Dec, 2016

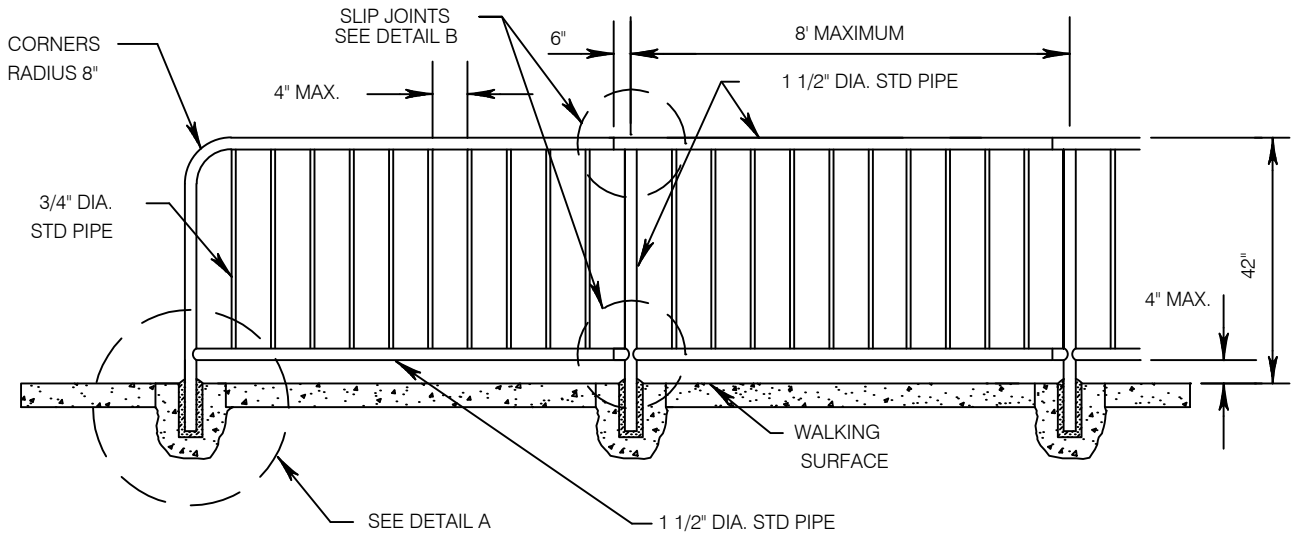

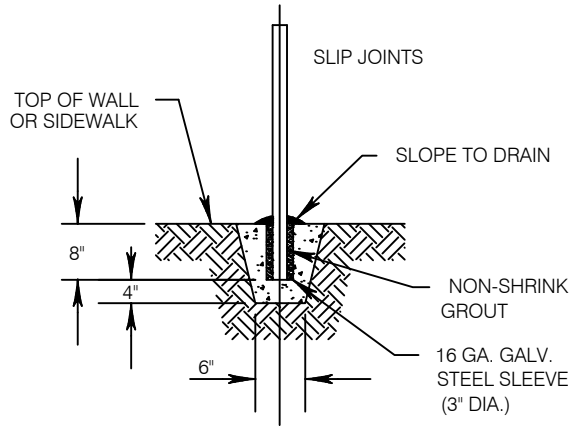

DETAIL A
℄ POST

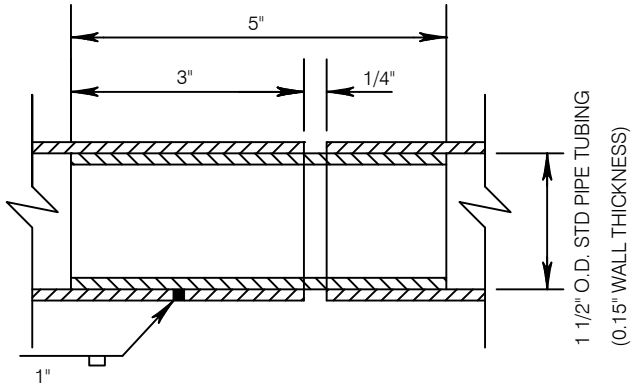

DETAIL B
SLIP JOINT DETAIL

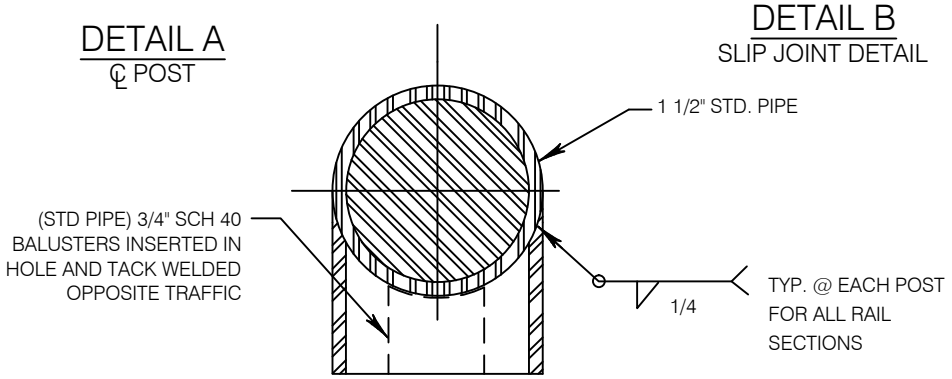

NOTES:

1. MATERIAL FOR PEDESTRIAN HANDRAIL SHALL BE ALUMINUM (ASTM B-429) OR HOT DIPPED GALVINIZED STEEL (ASTM 120) AS APPROVED BY THE DIRECTOR.

2. SEE STANDARD DRAWING No. 356 FOR ADDITIONAL FABRICATION AND SPECIFICATION REQUIREMENTS.

3. PROVIDE SLIP JOINTS AT STAIRWAY EXPANSION JOINTS AND AT EVERY 24 FEET ON CENTER MAXIMUM.

4. MAXIMUM OF 4" CLEAR SPACE BETWEEN BALUSTERS

City of Bothell™	**City of Bothell** **PUBLIC WORKS DEPARTMENT**	Approved By: City Engineer	PEDESTRIAN RAILING	Standard Detail **356A** Revision Date Nov, 2013

PEDESTRIAN RAIL (ALUMINUM)

ALUMINUM PEDESTRIAN RAIL SHALL BE FABRICATED AND INSTALLED IN ACCORDANCE WITH THESE SPECIAL PROVISIONS AND STANDARD DRAWING NO. 355.

ALUMINUM PEDESTRIAN RAIL SHALL BE NATURAL ALUMINUM COLOR.

COMPLETED ALUMINUM RAILING UNITS SHALL BE ANODIZED AFTER FABRICATION CONFORMING TO THE REQUIREMENTS OF THE ALUMINUM ASSOCIATION STANDARD FOR ANODIZED ARCHITECTURAL ALUMINUM, CLASS I ANODIC COATING, AA-C22-A41.

WELDING SHALL CONFORM TO THE REQUIREMENTS OF THE "SPECIFICATIONS FOR ALUMINUM STRUCTURES" OF THE ALUMINUM ASSOCIATION. ALL EXPOSED WELDS SHALL BE GROUND FLUSH WITH ADJACENT SURFACES.

THE BASE METAL FOR ALUMINUM RAILING SHALL BE ASA ALLOY DESIGNATION 6063-T6. PIPE AND TUBING SHALL BE EXTRUDED CONFORMING TO THE REQUIREMENTS OF ASTM B 429, PLATES AND SHEETS SHALL BE ROLLED CONFORMING TO ASTM B 209, AND RODS, BARS OR SHAPES SHALL BE EXTRUDED CONFORMING TO ASTM B 221.

HORIZONTAL RAILS AND VERTICAL SUPPORT POSTS SHALL BE 1 1/2 INCH DIAMETER STANDARD PIPE AND BALUSTERS SHALL BE 3/4 INCH DIAMETER STANDARD ALUMINUM PIPE. RAILS, POSTS, AND BALUSTERS SHALL BE MACHINE CUT TO PROVIDE A UNIFORM LENGTH PRIOR TO ASSEMBLY.

RAILING SHALL BE ERECTED AND ADJUSTED, IF NECESSARY, TO ASSURE A CONTINUOUS LINE AND GRADE.

PEDESTRIAN RAIL (GALVANIZED STEEL)

GALVANIZED PEDESTRIAN RAIL SHALL BE FABRICATED AND INSTALLED IN ACCORDANCE WITH THESE SPECIAL PROVISIONS AND STANDARD DRAWING NO. 355

STEEL RAILINGS MATERIALS SHALL BE WELDED OR SEAMLESS STEEL PIPE CONFORMING TO THE REQUIREMENTS OF ASTM A 120, STRUCTURAL STEEL CONFORMING TO ASTM A 36, OR TUBULAR SECTIONS OF HOT ROLLED MILD STEEL, CONFORMING TO ASTM A 501. ALL WELDING SHALL CONFORM TO AMERICAN WELDING SOCIETY STRUCTURAL WELDING CODE AWS D1.1. AFTER FABRICATION EACH SECTION OF RAILING SHALL BE HOT-DIPPED GALVANIZED WITH A MINIMUM ZINC COATING OF 2 OUNCES PER SQUARE FOOT. ALL BURRS AND SHARP EDGES SHALL BE REMOVED PRIOR TO GALVANIZING.

FIELD WELDS SHALL BE GALVANIZED WITH 3 COATS OF SUCH MATERIALS AS "GALVALLOY" OR GALVICON. PAINTING OF WELDS WILL NOT BE PERMITTED.

HORIZONTAL RAILS AND VERTICAL SUPPORT POSTS SHALL BE BE 1 1/2 INCH DIAMETER AND BALUSTERS SHALL BE 3/4 INCH DIAMETER STANDARD WEIGHT GALVANIZED STEEL PIPE. RAILS, POSTS AND BALUSTERS SHALL BE MACHINE CUT TO PROVIDE A UNIFORM LENGTH PRIOR TO ASSEMBLY.

RAILING SHALL BE ERECTED AND ADJUSTED, IF NECESSARY, TO ASSURE A CONTINUOUS LINE AND GRADE.

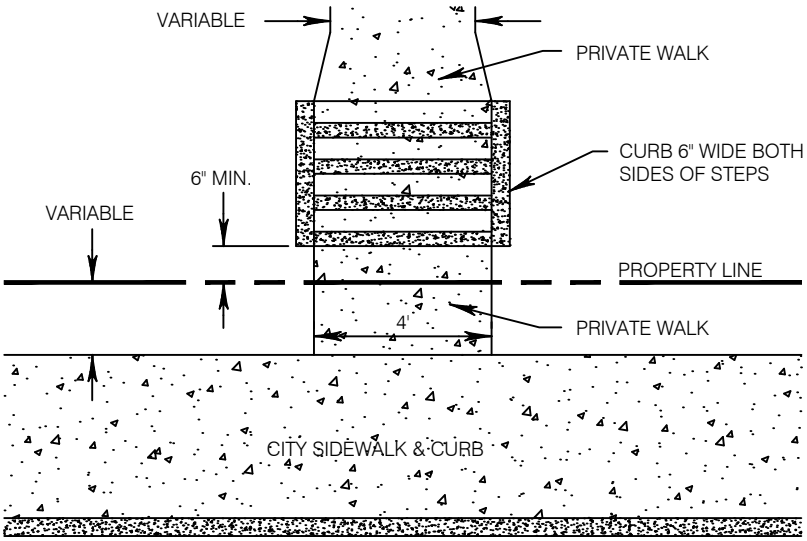

PLAN

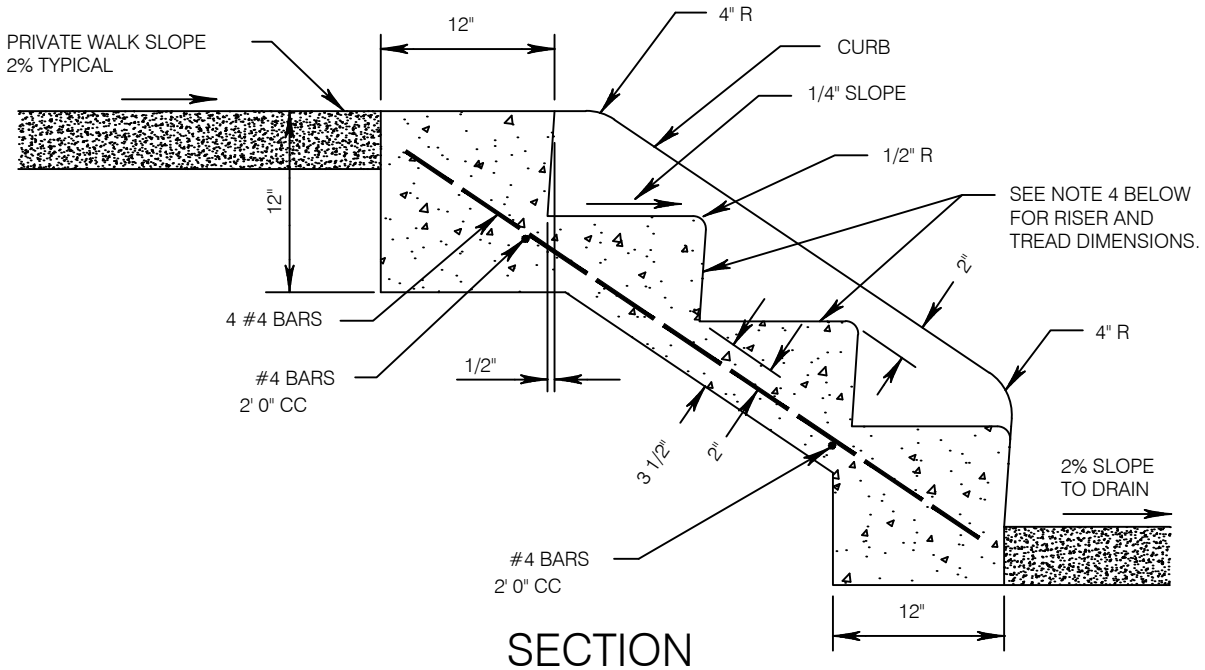

SECTION

NOTES :

1. STEPS SHALL BE 4'-0" WIDE, CURB TO CURB, PLUS 6" CURBS ON EACH SIDE.

2. CEMENT CONCRETE SHALL BE CLASS 3000, TROWEL FINISH.

3. NUMBER OF STEPS SHALL SUIT INDIVIDUAL CONDITIONS, WITH TREAD AND RISER DIMENSIONS TO SUIT THE GRADE.

4. RISER SHALL BE 5" MIN. 7" MAX., TREAD SHALL BE 11" MIN. 12" MAX.

5. ALL STEPS SHALL HAVE RAILINGS (BOTH SIDES) INSTALLED PER STD'S 356A AND 356B.

City of Bothell™	**City of Bothell** **PUBLIC WORKS DEPARTMENT**	Approved By: City Engineer	CEMENT CONCRETE STEPS	Standard Detail **357** Revision Date Nov, 2013

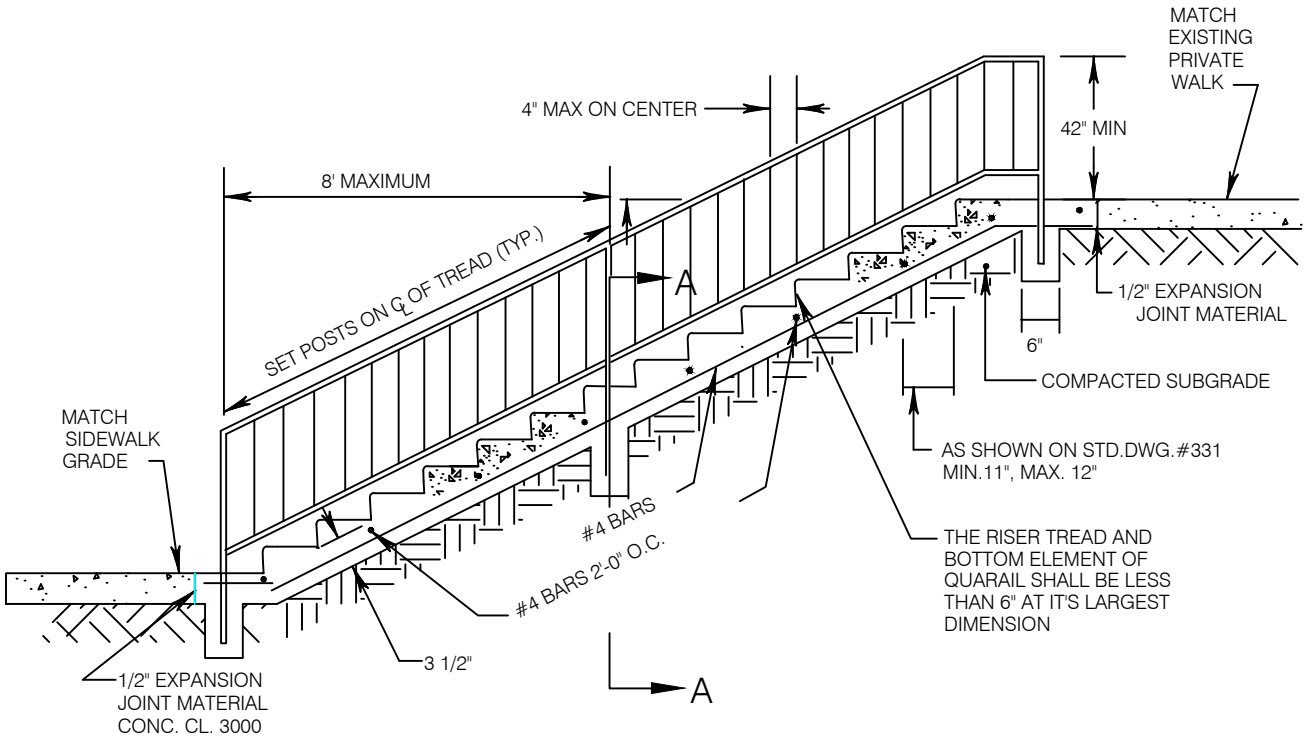

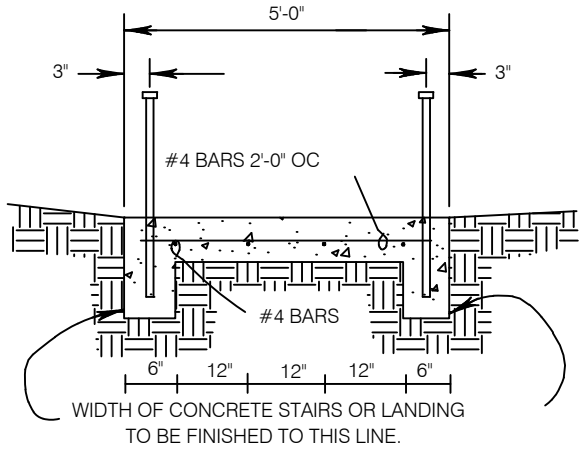

SECTION A-A

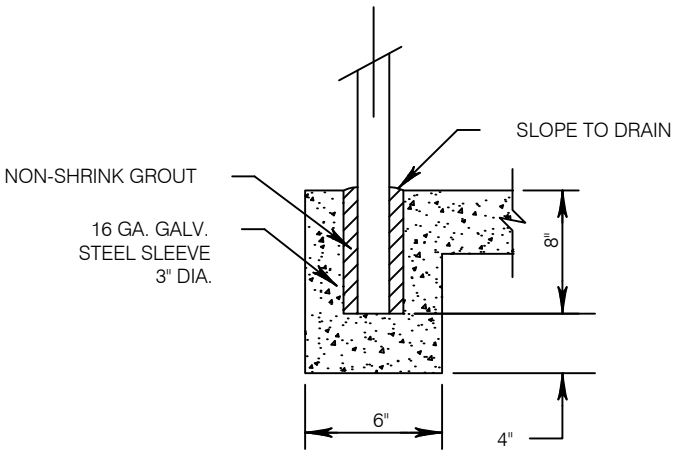

POST DETAIL

NOTES:

1. CEMENT CONCRETE STEPS AND CURBS SHALL BE CONSTRUCTED AS SHOWN ON DETAIL 357
2. HEIGHT OF RAILING SHALL BE 36" MINIMUM, 38" MAXIMUM TOP OF NOSING TO TOP OF RAILING.
3. PEDESTRIAN RAILING SHALL BE CONSTRUCTED AS SHOWN ON DETAIL 356A AND 356B.
4. CLEAR SPACE BETWEEN BALUSTERS SHALL BE A MAXIMUM OF 4".
5. ALL STEPS SHALL HAVE HANDRAIL ON BOTH SIDES.

City of Bothell™	**City of Bothell** **PUBLIC WORKS DEPARTMENT**	Approved By: City Engineer	CEMENT CONCRETE STAIRWAY	Standard Detail **358** Revision Date Nov, 2013

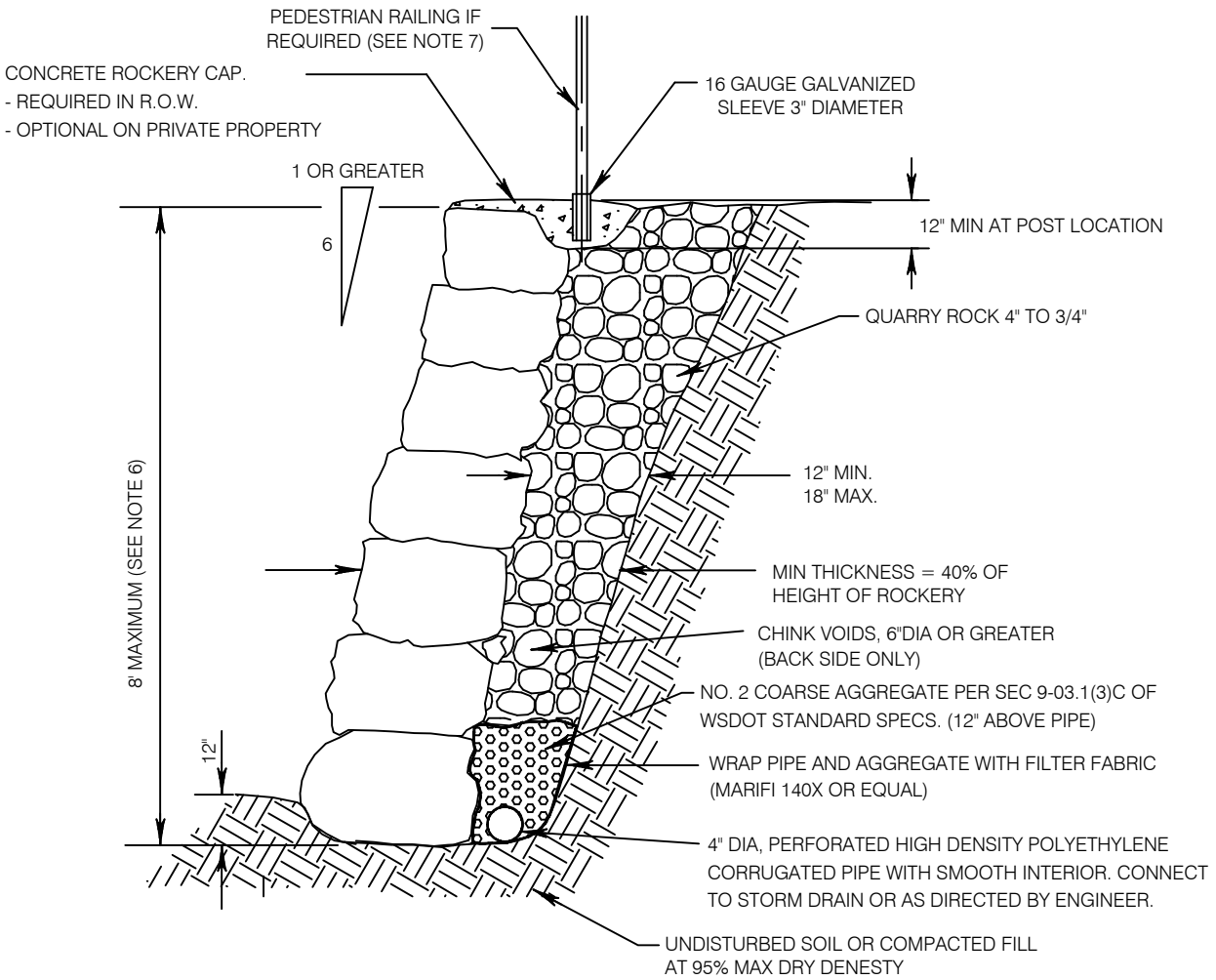

NOTES:

1. ROCK FACINGS SHALL BE CONSTRUCTED BY INTERLOCKING THE ROCKS SO THAT EACH ROCK IS IN CONTACT WITH AT LEAST TWO OTHER ROCKS, AND WITH EACH ROCK HAVING A MINIMUM OF THREE BEARING SURFACES.

2. EACH ROCK SHALL BE LAID WITH A FLAT SURFACE ALONG THE ROCKERY AND WITH THE LONG DIMENSION HORIZONTAL.

3. THE DENSITY OF ROCK MATERIAL SHALL BE A MINIMUM OF 160 POUNDS PER CUBIC FOOT.
THE SIZE CATEGORIES FOR ROCK SHALL BE AS FOLLOWS:

SIZE	APPROXIMATE WEIGHT - LB.	APPROXIMATE DIAMETER - INCHES
1-MAN ROCK	50 - 200	12 - 18
2-MAN ROCK	200 - 700	18 - 28
3-MAN ROCK	700 - 2000	28 - 36
4-MAN ROCK	2000 - 4000	36 - 48
5-MAN ROCK	4000 - 6000	48 - 54
6-MAN ROCK	6000 - 8000	54 - 60

4. THE CONTRACTOR SHALL USE THE ROCK SIZES AS SET FORTH IN THE ABOVE TABLE AND SHALL INSURE A DISTRIBUTION OF ROCK SIZES WITH THE LARGEST ROCKS ON THE BOTTOM AND PROGRESSIVELY SMALLER ON TOP.

5. VOIDS IN THE ROCKERY FACE SHALL NOT BE GRATER THAN 50 SQUARE INCHES FOR ROCKS OVER 3 FEET HIGH AND 36 SQUARE INCHES FOR ROCKS UNDER 3 FEET HIGH.

6. ROCKERIES OVER EIGHT (8) FEET HIGH MUST BE DESIGNED BY A CIVIL/GEOTECHINCAL ENGINEER LICENSED IN THE STATE OF WASHINGTON.

7. ROCKERIES WHICH ARE MORE THAN 30 INCHES ABOVE GRADE OD FLOOR BELOW SHALL BE PROTECTED BY A 36 INCH HIGH PEDESTRIAN RAILING. (SEE DETAILS 356A AND 356B)

City of Bothell™	**City of Bothell** **PUBLIC WORKS DEPARTMENT**	Approved By: City Engineer	NON-STRUCTURAL ROCKERY	Standard Detail **359** Revision Date Nov, 2013

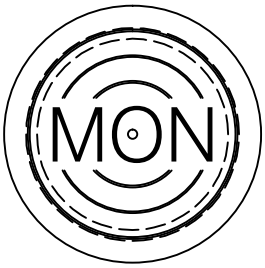

LID PLAN

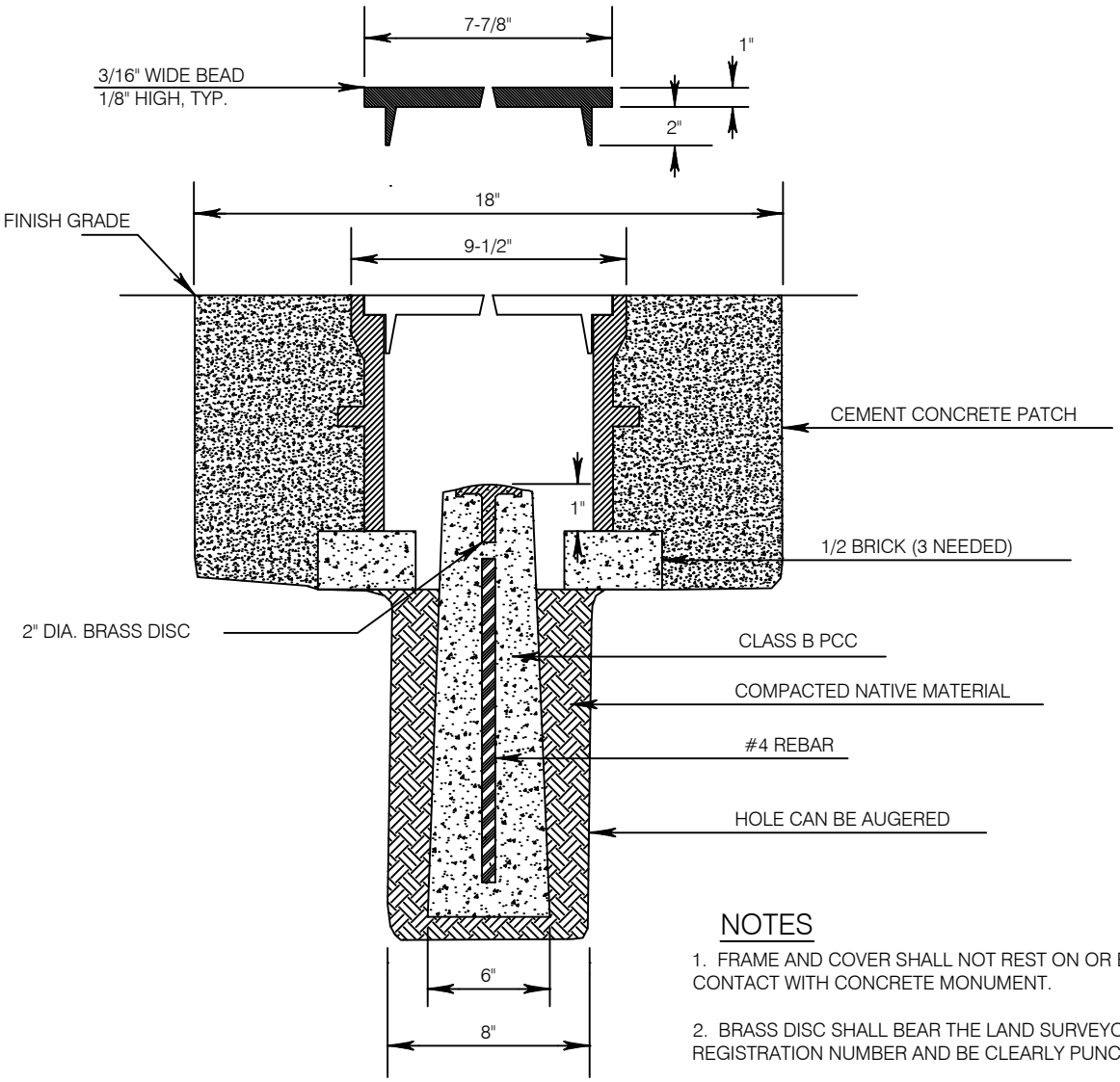

NOTES

1. FRAME AND COVER SHALL NOT REST ON OR BE IN CONTACT WITH CONCRETE MONUMENT.

2. BRASS DISC SHALL BEAR THE LAND SURVEYORS REGISTRATION NUMBER AND BE CLEARLY PUNCHED.

3. FRAME AND COVER : SATHER MANUFACTURING COMPANY (No. 2022 FOR KING COUNTY OR 36950 IN SNOHOMISH COUNTY) W/CONCRETE MONUMENT OR EQUAL.

City of Bothell™	**City of Bothell** **PUBLIC WORKS DEPARTMENT**	Approved By: City Engineer	SURVEY CONTROL MONUMENT	Standard Detail **360** Revision Date Nov, 2013

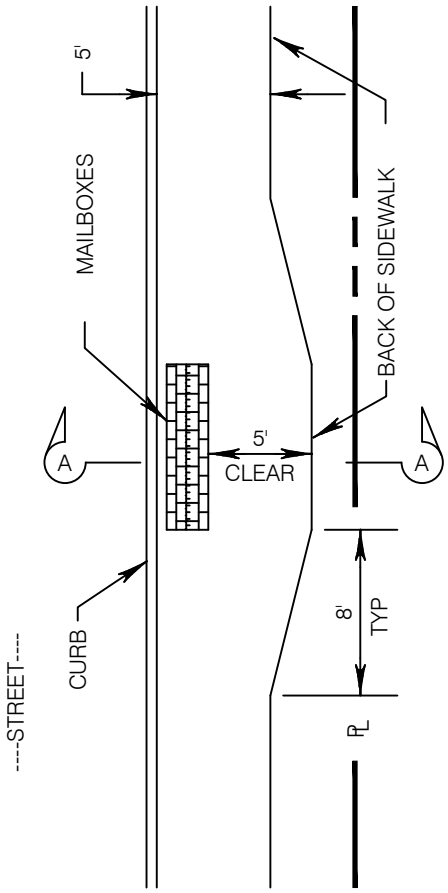

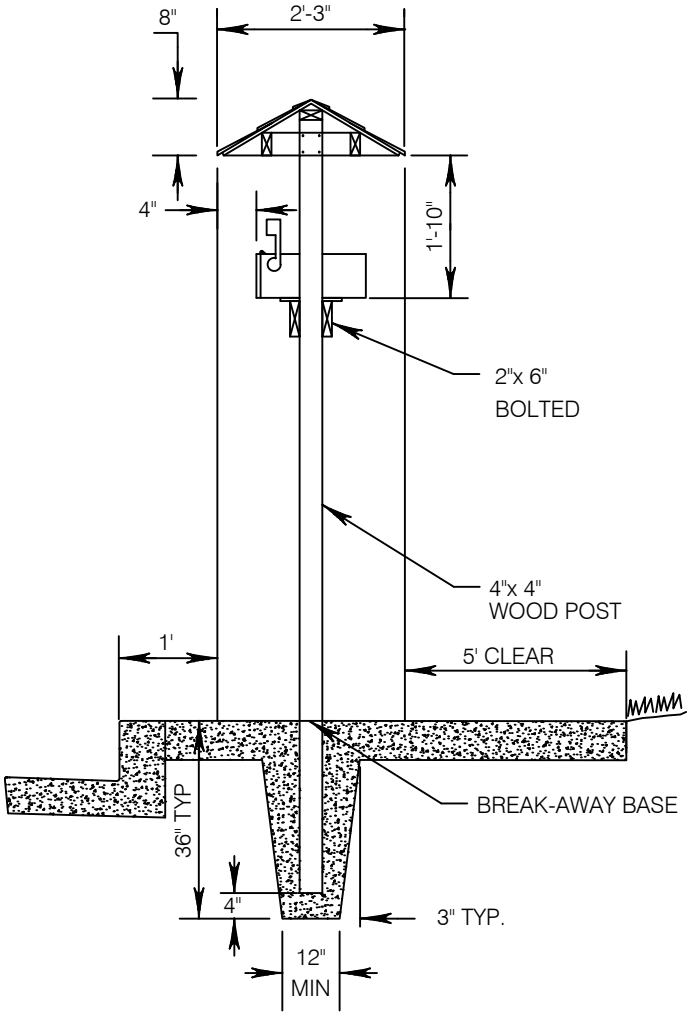

SECTION A-A

NOTES:

1. MAILBOX MUST BE TYPE "APPROVED BY THE POSTMASTER GENERAL" WITH A UNIFORM BOX STYLE AND METHOD OF ADDRESS IDENTIFICATION.

2. LOCATION IS SUBJECT TO APPROVAL BY THE CITY, FOR PROTECTION OF VIEWS, OUTSIDE SIGHT DISTANCE TRIANGLE, ACCESS AND ARE TO BE SHOWNON STREET IMPROVEMENT PLANS.

3. THE SKETCH DEPICTS A MINIMUM STRUCTURAL AND DIMENSIONAL STANDARD. INNOVATIVE DESIGNS MEETING THE MINIMUM DIMENSIONAL AND STRUCTURAL REQUIREMENTS ARE ACCEPTABLE.

4. ALL WOOD TO BE PRESSURE TREATED FIR OR HEMLOCK.

5. CONCRETE PAD FOR CLUSTER BOX SHALL BE 4' X 4' X 12" DEEP

City of Bothell™	**City of Bothell** **PUBLIC WORKS DEPARTMENT**	Approved By: City Engineer	MAILBOX STRUCTURE INSTALLATION	Standard Detail **361** Revision Date Nov, 2013

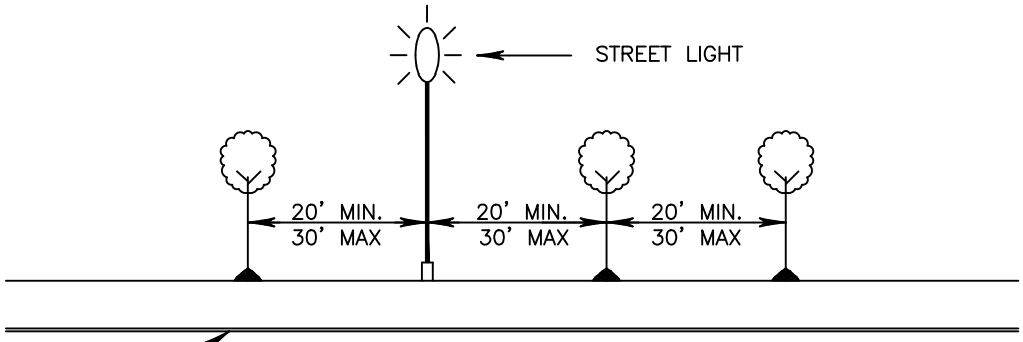

TYPICAL SECTION

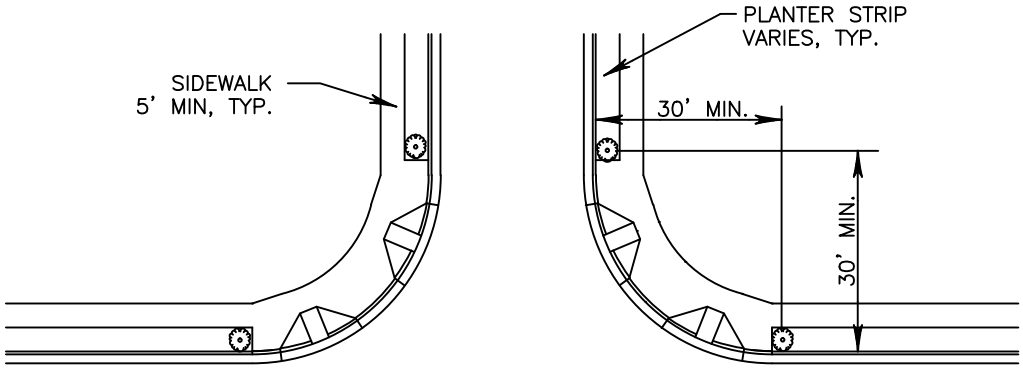

TYPICAL TREE
LOCATION AT
4–WAY INTERSECTION

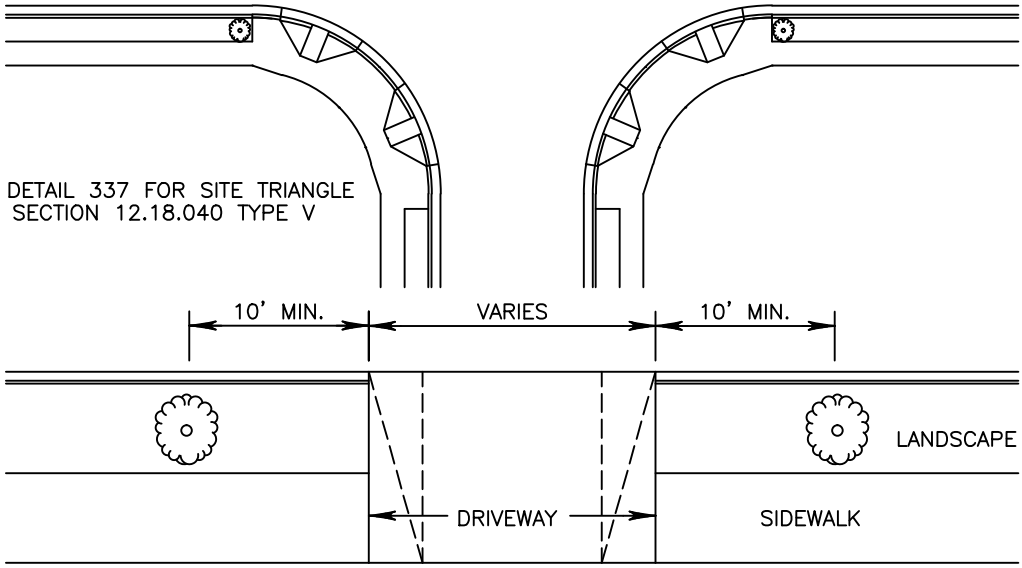

Note:
Street trees in the downtown core – roughly from 96th Ave NE to 104th Ave NE and NE 180th St. and SR 522 to NE 186th St.(NE188th St. along Bothell Way NE) should be planted in a formal pattern, with regular spacing of the same or similar trees along a block face. Outside the downtown core, street trees should be planted in a more naturalistic pattern, with a variety of trees planted in clusters with irregular spacing.

City of Bothell	**City of Bothell** **PUBLIC WORKS DEPARTMENT**	Approved By: City Engineer	STREET TREE LOCATION	Standard Detail **363** Revision Date Feb, 2012

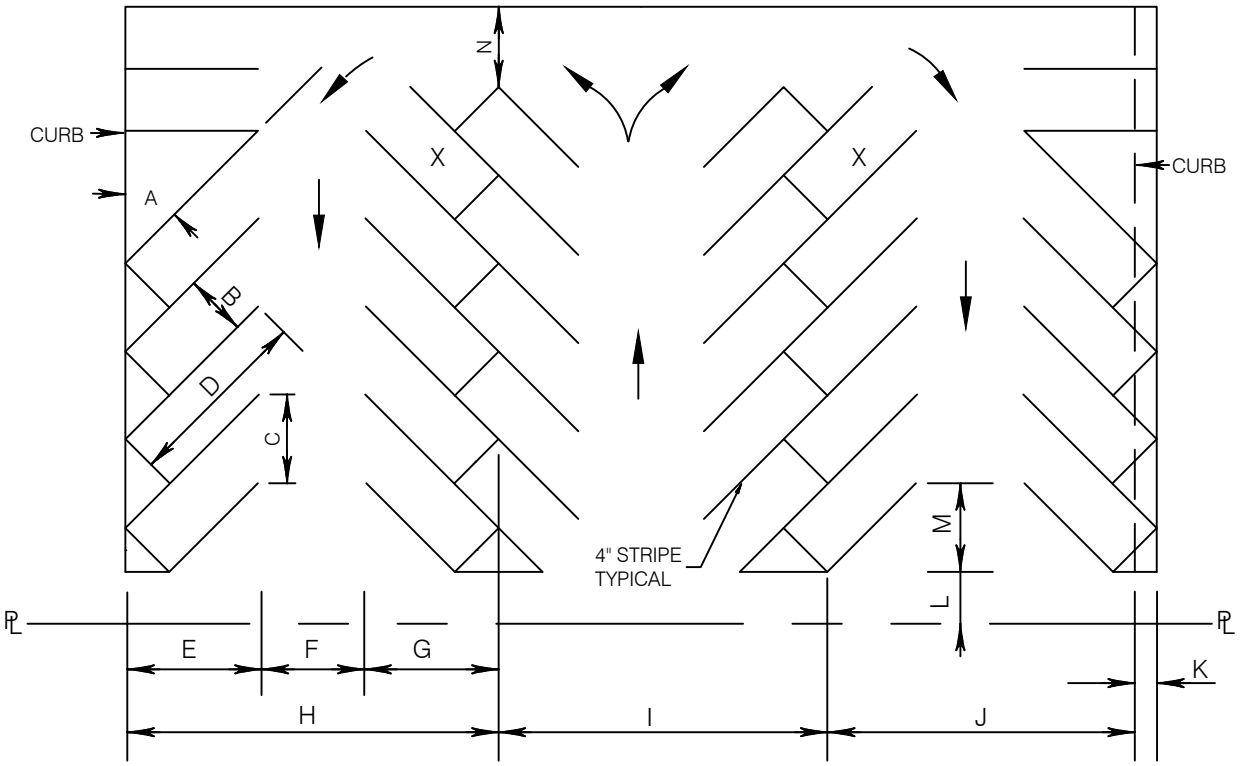

X = STALL NOT ACCESSIBLE IN CERTAIN LAYOUTS.

A = PARKING ANGLE
B = STALL WIDTH, PERPENDICULAR TO STALL LINES
C = STALL WIDTH, PARALLEL TO AISLE
D = LENGTH OF STALL LINE
E = STALL DEPTH,PERPENDICULAR TO AISLE
F = AISLE WIDTH, BETWEEN STALL LINES
G = STALL DEPTH, INTERLOCKING
H = MODULE, WALL TO INTERLOCK
I = MODULE, INTERLOCK TO INTERLOCK
J = MODULE, INTERLOCK TO CURB
K = BUMPER OVERHANG
L = OFFSET
M = SETBACK
N = CROSS AISLE, ONE WAY
N = CROSS AISLE, TWO WAY

PARALLEL PARKING:

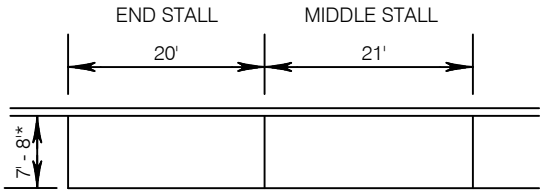

* USE 8' WHERE THERE IS ADEQUATE PAVEMENT WIDTH. 7' MINIMUM ON EXISTING STREETS AND LOTS WITH LIMITED SPACE

NOTE:

SEE SECTION 3 OF DESIGN AND CONSTRUCTION STANDARDS AND SPECIFICATIONS FOR FURTHER CONDITIONS AND RESTRICTIONS.

City of Bothell™	**City of Bothell** **PUBLIC WORKS DEPARTMENT**	Approved By: City Engineer	TYPICAL PARKING LAYOUT	Standard Detail **364** Revision Date Dec, 2016

STALL GEOMETRY

FOR OFF-STREET PARKING

SEE STANDARD DETAIL 364 FOR TYPICAL PARKING LAYOUT

	PARKING ANGLE (DEGREES) A		STALL WIDTH PERPENDICULAR TO STALL LINES B	STALL WIDTH PARALLEL TO AISLE C	LENGTH OF STALL LINE D	STALL DEPTH PERPENDICULAR TO AISLE E	AISLE WIDTH BETWEEN STALL LINES (SEE NOTE 1) F*	STALL DEPTH INTERLOCKING G	MODULE, WALL TO INTERLOCK H	MODULE, INTERLOCK TO INTERLOCK I	MODULE, INTERLOCK TO CURB J	BUMPER, OVERHANG (TYPICAL) K	OFFSET L	SETBACK M	CROSS AISLE (ONE WAY) N	CROSS AISLE (TWO WAY) N
STANDARD	45°		8' 6"	12' 0"	27' 6"	19' 6"	13' 0"	19' 6"	52' 0"	52' 0"	52' 0"	0' 0"	6' 5"	13' 2"	14" 0"	24' 0"
		HS	13' 0"	18' 4"	27' 6"	19' 6"	11' 0"								14" 0"	24' 0"
		VS	16' 0"	22' 6"	32' 0"	22' 7"	12' 0"								14" 0"	24' 0"
	60°		8' 6"	9' 10"	23' 8"	20' 6"	18' 0"	20' 6"	59' 0"	59' 0"	59' 0"	0' 0"	2' 6"	9' 4"	14" 0"	24' 0"
		HS	13' 0"	15' 0"	23' 8"	20' 6"	15' 0"								14" 0"	24' 0"
		VS	16' 0"	18' 0"	26'11"	23' 4"	16' 0"								14" 0"	24' 0"
	90°		8' 6"	8' 6"	18' 0"	18' 0"	24' 0"	18' 0"	60' 0"	60' 0"	60' 0"	0' 0"	0' 0"	0' 0"	14" 0"	24' 0"
		HS	13' 0"	13' 0"	18' 0"	18' 0"	24' 0"								14" 0"	24' 0"
		VS	16' 0"	16' 0"	18' 0"	18' 0"	24' 0"								14" 0"	24' 0"
COMPACT (4)	45°		7' 6"	10' 7"	22' 6"	15' 11"	11' 0"	15' 11"	42' 10"	42' 10"	42' 10"	0' 0"	6' 5"	10' 0"	14" 0"	24' 0"
	60°		7' 6"	8' 8"	19' 4"	16' 9"	14' 0"	16' 9"	47' 6"	47' 6"	47' 6"	0' 0"	2' 6"	7' 5"	14" 0"	24' 0"
	90°		7' 6"	7' 6"	15' 0"	15' 0"	20' 0"	15' 0"	50' 0"	50' 0"	50' 0"	0' 0"	0' 0"	0' 0"	14" 0"	24' 0"

* ONE WAY EXCEPT FOR 90°

NOTES:

1. AISLE WIDTH MAY BE REQUIRED TO BE WIDER IF MULTIPLE UTILITY LINES ARE LOCATED WITHIN THE AISLE CORRIDOR.

2. HS = HANDICAP SPACE, VS = HANDICAP VAN ACCESSIBLE SPACE, (SEE WASHINGTON STATE REGULATIONS FOR BARRIER FREE FACILITIES).

3. COLUMNS MAY ENCROACH UP TO 6" INTO STALL BEFORE STALL WIDENING IS REQUIRED. COLUMNS MAY NOT INTERFERE WITH DOOR SWING OR MANEUVERABILITY IN AND OUT OF THE STALL.

4. COMPACT STALLS ONLY PERMITTED FOR ASSIGNED USAGE. UP TO 50 PERCENT OF PARKING SPACES ARE PERMITTED TO BE COMPACT. IF APPLICANT DESIRES TO IMPLEMENT COMPACT PARKING, A PARKING MANAGEMENT PLAN MUST BE SUBMITTED TO THE CITY FOR REVIEW.

City of Bothell™

City of Bothell

PUBLIC WORKS DEPARTMENT

Approved By:

City Engineer

MINIMUM PARKING LOT STALL AND AISLE DIMENSIONS

Standard Detail

365

Revision Date

Dec, 2016

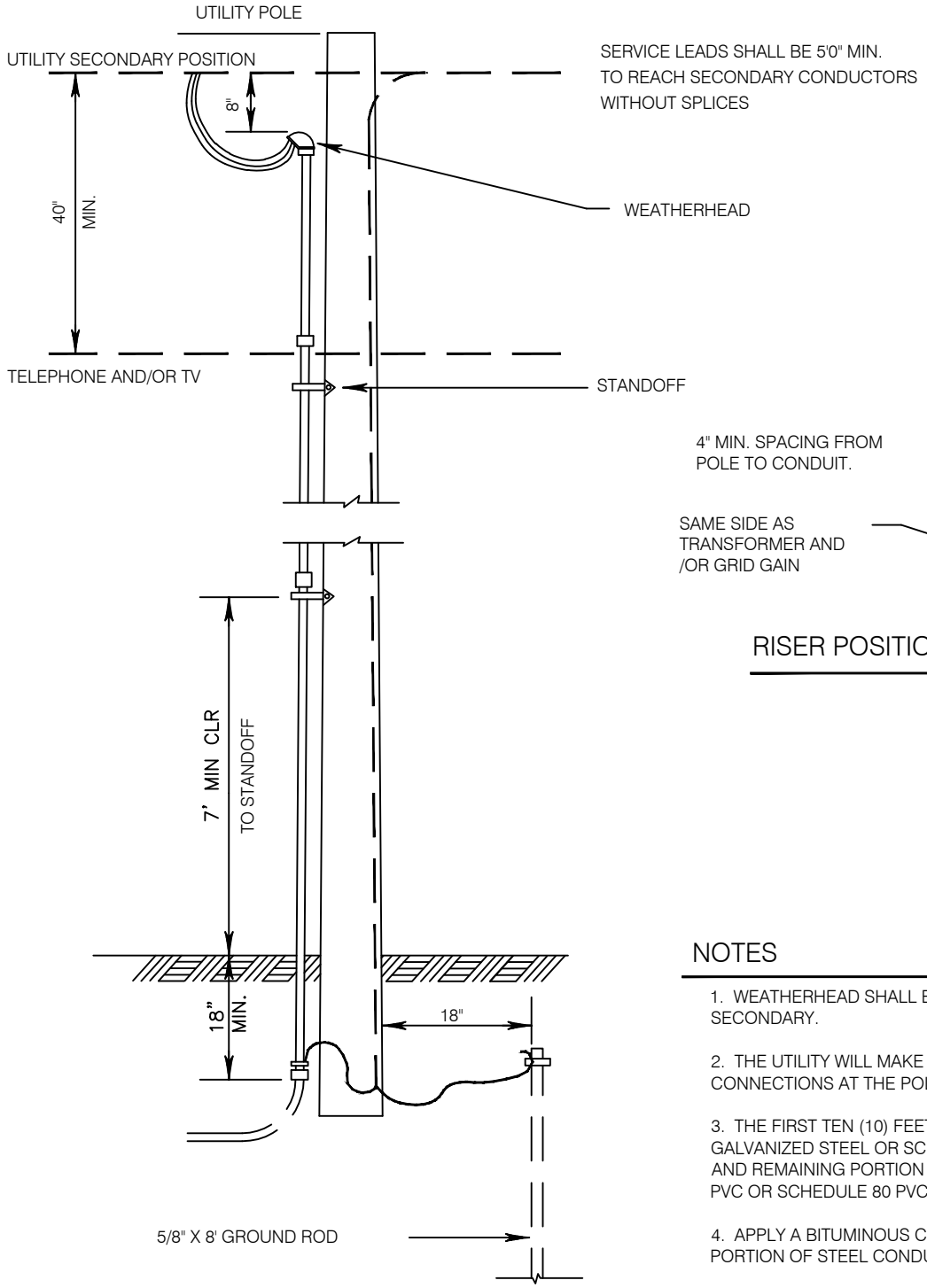

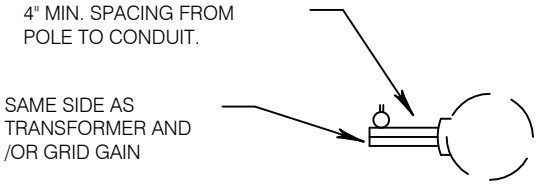

RISER POSITION DETAIL

NOTES

1. WEATHERHEAD SHALL BE LOCATED 8" BELOW SECONDARY.

2. THE UTILITY WILL MAKE ALL SECONDARY SERVICE CONNECTIONS AT THE POLE.

3. THE FIRST TEN (10) FEET OF RISER SHALL BE RIGID GALVANIZED STEEL OR SCHEDULE 80 PVC CONDUIT AND REMAINING PORTION SHALL BE SCHEDULE 40 PVC OR SCHEDULE 80 PVC.

4. APPLY A BITUMINOUS COATING ON BURIED PORTION OF STEEL CONDUIT

5. GROUND CLAMP & TAP TO POLE GROUND REQUIRED WHEN FIRST TEN (10) FEET OF RISER IS RIGID STEEL.

City of Bothell™	**City of Bothell** **PUBLIC WORKS DEPARTMENT**	Approved By: City Engineer	CONDUIT RISER FOR PUD SERVICE DROP	Standard Detail **366** Revision Date Nov, 2013

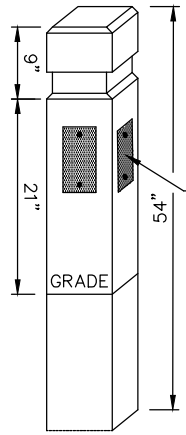

FIXED BOLLARD

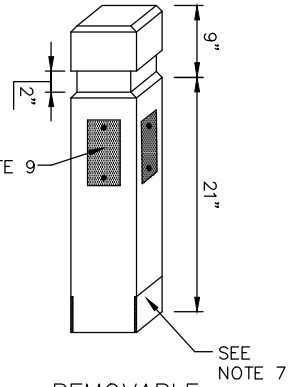

REMOVABLE BOLLARD

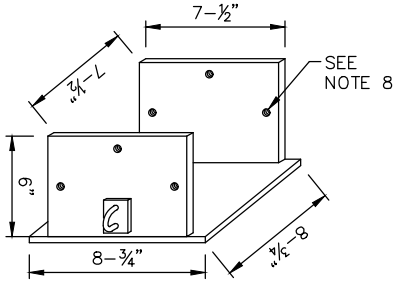

SLIDE–THROUGH POST BRACKET
(FOR REMOVABLE BOLLARD)

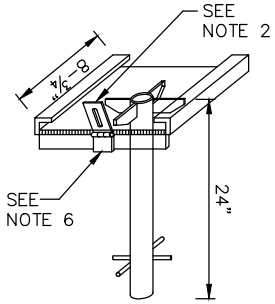

2" SCHEDULE 40
GALVANIZE PIPE
(FOR SUPPORT PLATE)

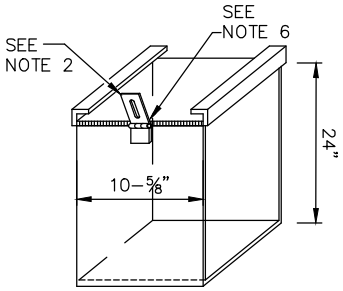

GALVANIZED STEEL PLATE
(FOR SUPPORT PLATE)

ALTERNATE BRACKET SUPPORT
(FOR REMOVABLE BOLLARD)

NOTES:

1. ALL PLATE MATERIALS SHALL BE ⅜" GALVANIZED STEEL.
2. LOCKING HINGE SHALL BE HEAVY DUTY CLASP. PROVIDE ADEQUATE CLEARANCE BETWEEN PAVEMENT & CLASP TO ALLOW CLASP TO LIE FLAT WHEN OPEN.
3. BOLLARD SHALL BE MANUFACTURED FROM 8" X 8" DOUGLAS FIR #2 OR BETTER AND PRESSURE–TREATED WITH LP–22.
4. REMOVABLE BOLLARD INSTALLATION: PIPE BASES ARE SET IN A 12" DIAMETER HOLE, 32" DEEP; PLATE BASES ARE SET IN A HOLE WITH 2" OF CLEARANCE ON ALL SIDES AND BOTH ARE TO BE BACKFILLED WITH CONCRETE. LOCK HASP FACES THE STREET.
5. FIXED BOLLARD INSTALLATION: SET FIXED BOLLARDS IN A IN A 16" DIAMETER HOLE, 24" DEEP, AND BACKFILL WITH CONCRETE.
6. USE ¼" WELD (BOTH SIDES) TO MOUNT CLASP.
7. FOR REMOVABLE BOLLARD BASE BRACKET INCISE ¼" TO FIT BOLLARD BASE.
8. FOR REMOVABLE BOLLARD SLIDE THROUGH POST BRACKET. DRILL THREE HOLES FOR ½" x 1.5" MACHINE SCREWS (STAINLESS STEEL) AS SHOWN.
9. FOR BOLLARD REFLECTIVITY USE HIGH INTENSITY DELINEATOR 4" x 8" ZUMAR OR EQUIVALENT; USE WHITE COLOR ONLY. INSTALL ON ALL SIDES OF THE BOLLARD VISIBLE FROM APPROACHING BICYCLIST. FASTEN WITH STAINLESS STEEL LAG SCREWS.
10. DELINEATORS SHOULD BE ATTACHED TO ALL BOLLARDS THAT ARE LOCATED WITHIN THE CITY OF BOTHELL OR AS SPECIFIED BY ENGINEER.

City of Bothell

City of Bothell
PUBLIC WORKS DEPARTMENT

Approved By:
City Engineer

REMOVABLE AND
FIXED BOLLARD

Standard Detail
367
Revision Date
Feb, 2012

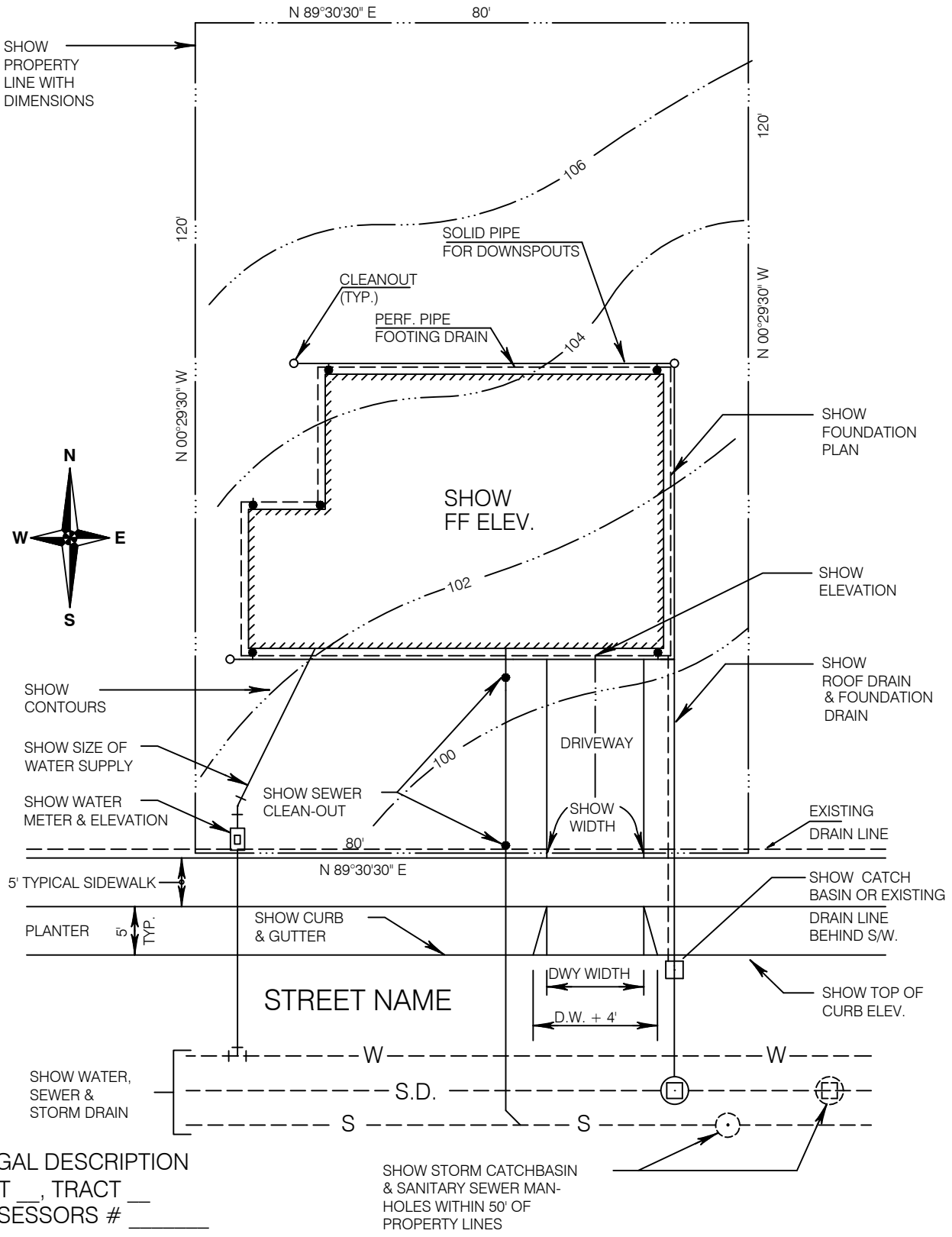

LEGAL DESCRIPTION
LOT __, TRACT __
ASSESSORS # _____

City of Bothell™	**City of Bothell** **PUBLIC WORKS DEPARTMENT**	Approved By: City Engineer	TYPICAL SITE PLAN	Standard Detail **369** Revision Date Nov, 2013

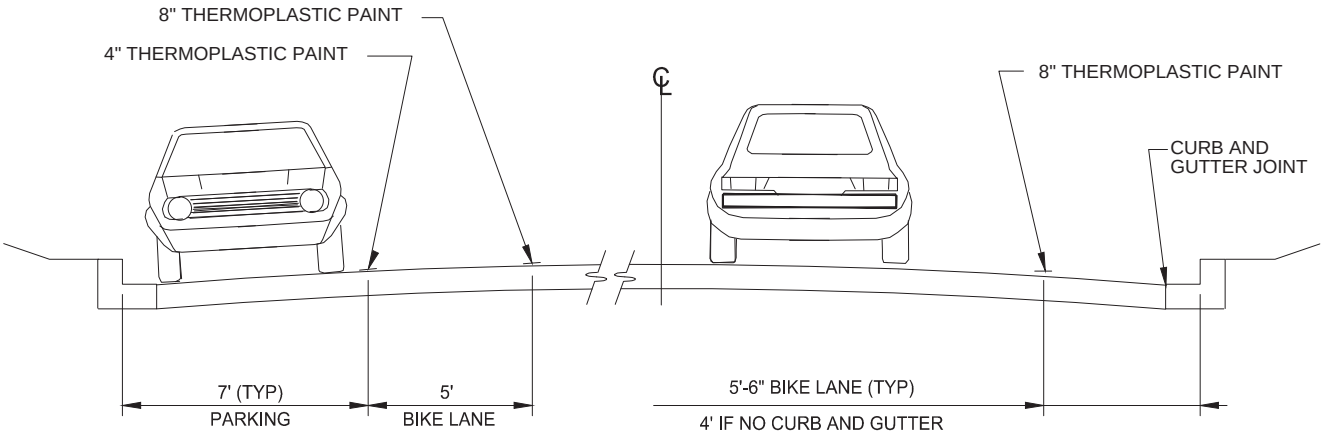

BICYCLE LANE WITH PARKING
NTS

BICYCLE LANE WITHOUT PARKING
NTS

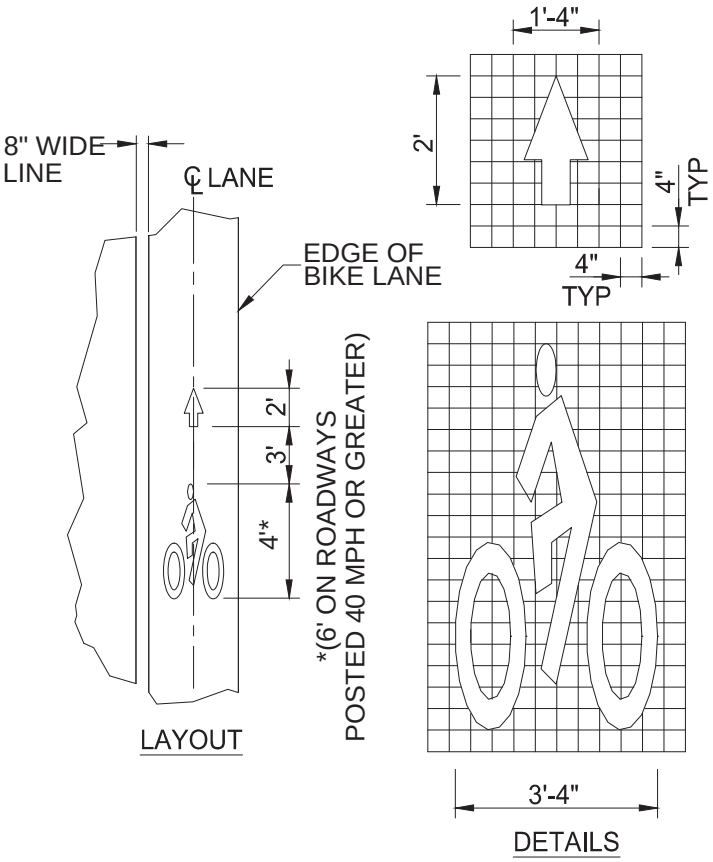

BICYCLE LANE SYMBOL
NTS

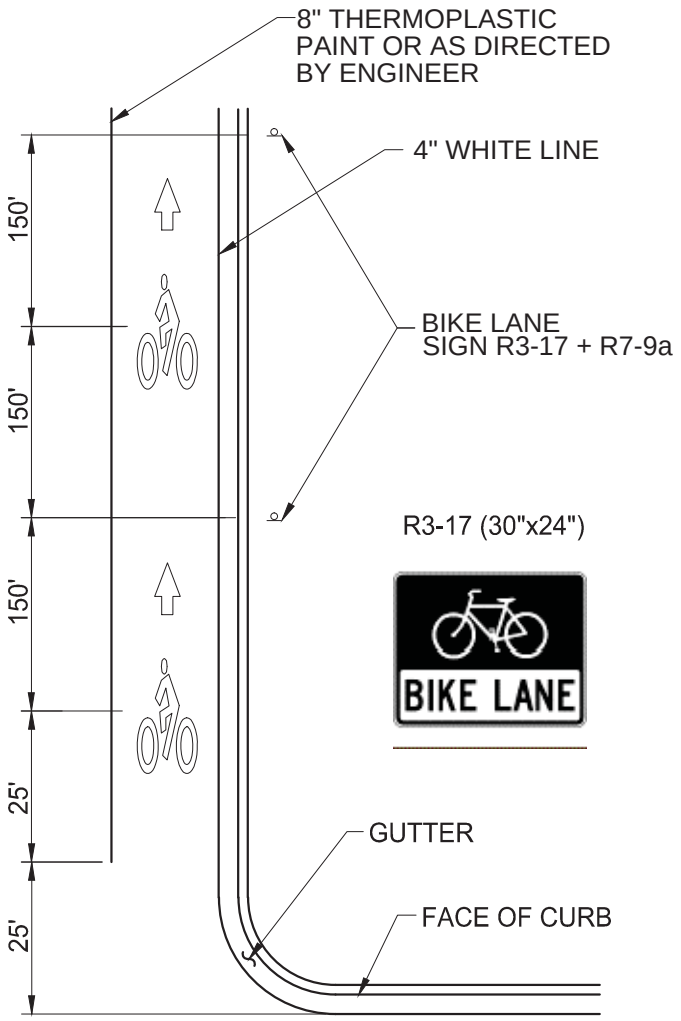

TYPICAL BICYCLE LANE
NTS

NOTE:

USE THERMOPLASTIC EXCEPT FOR BIKE SYMBOL (PAINT ONLY),UNLESS DIRECTED OTHERWISE BY ENGINEER.

City of Bothell	**City of Bothell** **PUBLIC WORKS DEPARTMENT**	Approved By: City Engineer	BICYCLE LANES	Standard Detail **370** Revision Date Nov, 2013

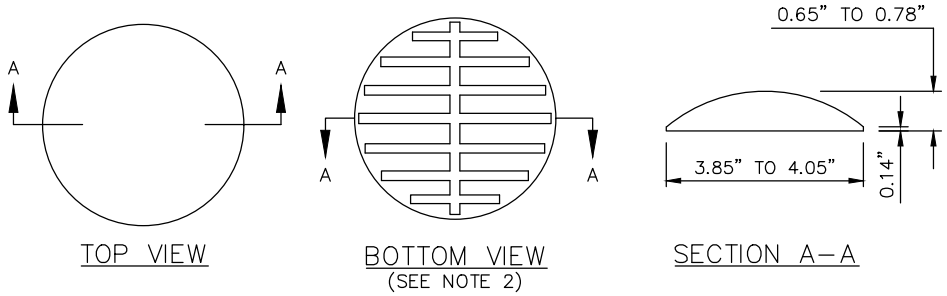

TYPE 1

NOTES:

1. TYPE 1 MATERIAL– MARKER SHALL BE MOLDED OF A HIGH IMPACT, RECYCLED ACRYLONITRILE BUTADIENE STYRENE (ABS), CONFORMING TO ASTM SPEC DI 78888.
2. MARKER BOTTOM SHALL ALLOW UPWARD FLOW OF ADHESIVE AND VENTING TO PREVENT AIR ENTRAPMENT.

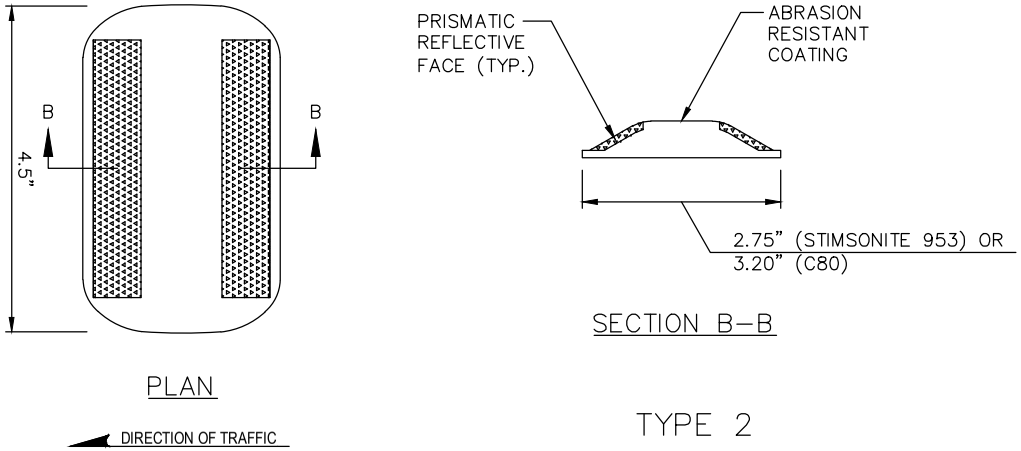

TYPE 2

NOTES:

1. RAISED PAVEMENT MARKERS TYPE 2 SHALL BE STIMSONITE 953 OR C80.
2. SUBSTITUTE PAVEMENT MARKERS SHALL NOT BE ACCEPTED WITHOUT WRITTEN APPROVAL BY ENGINEER, PRIOR TO THE INSTALLATION.
3. ALL MARKERS INSTALLED ON CEMENT CONCRETE PAVEMENT SHALL BE INSTALLED WITH AN EAS–60 TWO PART EPOXY.
4. ALL MARKERS INSTALLED ON HMA PAVEMENTS SHALL BE INSTALLED WITH BITUMINOUS ADHESIVE, CRAFCO STANDARD PAVEMENT MARKER ADHESIVE.

City of Bothell™

City of Bothell

PUBLIC WORKS DEPARTMENT

Approved By:

City Engineer

RAISED PAVEMENT MARKER

Standard Detail

371

Revision Date

Feb, 2012

NOTES:

1. A SINGLE LINE OF TYPE 2 RAISED PAVEMENT MARKERS MAY BE APPROPRIATE FOR CENTER LINE ON LOWER VOLUME STREETS, AS APPROVED BY ENGINEER.
2. FOR RAISED PAVEMENT MARKER DETAIL, SEE STD DETAIL 371.

● TYPE 1 RAISED PAVEMENT MARKER
□ TYPE 2 RAISED PAVEMENT MARKER

SEE STD DETAIL 371

TYPE 2 RPM RAISED FACE COLORS	
TYPE 2YY	YELLOW AND YELLOW
TYPE 2W	WHITE–ONE SIDE ONLY
TYPE 2Y	YELLOW–ONE SIDE ONLY
TYPE 1 RPM COLORS	
TYPE 1W	WHITE
TYPE 1Y	YELLOW

City of Bothell

City of Bothell

PUBLIC WORKS DEPARTMENT

Approved By:

City Engineer

RAISED PAVEMENT LANE MARKING ARTERIAL

Standard Detail

372

Revision Date

Feb, 2012

TYPE 2 RPM RAISED FACE COLORS	
TYPE 2YY	YELLOW AND YELLOW
TYPE 2W	WHITE–ONE SIDE ONLY
TYPE 2Y	YELLOW–ONE SIDE ONLY
TYPE 1 RPM COLORS	
TYPE 1W	WHITE
TYPE 1Y	YELLOW

● TYPE 1 RAISED PAVEMENT MARKER
□ TYPE 2 RAISED PAVEMENT MARKER

NOTES:

MATERIAL SHALL BE THERMOPLASTIC OR RAISED PAVEMENT MARKER. FINAL DETERMINATION TO BE MADE BY ENGINEER.

City of Bothell™

City of Bothell

PUBLIC WORKS DEPARTMENT

Approved By:

City Engineer

LANE DROP AND INTERSECTION CHANNELIZATION LINES

Standard Detail

373

Revision Date

Feb, 2012

NOTE:

MATERIAL SHALL BE THERMOPLASTIC UNLESS OTHERWISE APPROVED BY ENGINEER.

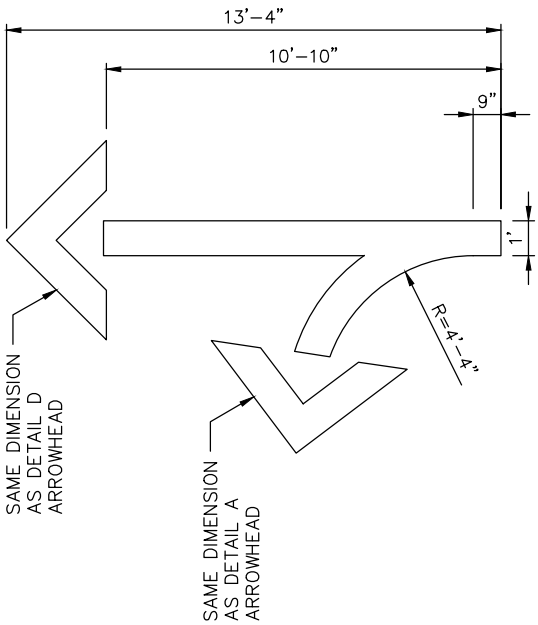

DETAIL E – STRAIGHT/LEFT

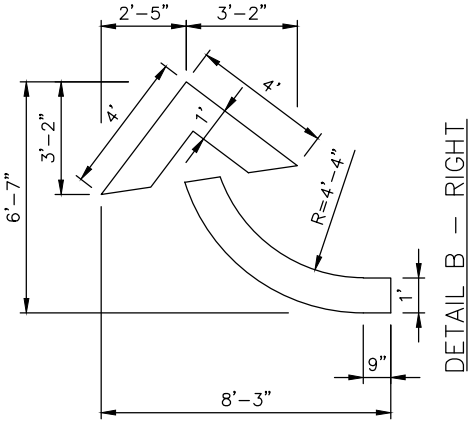

DETAIL B – RIGHT

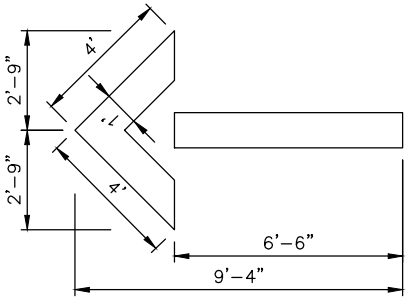

DETAIL D – STRAIGHT

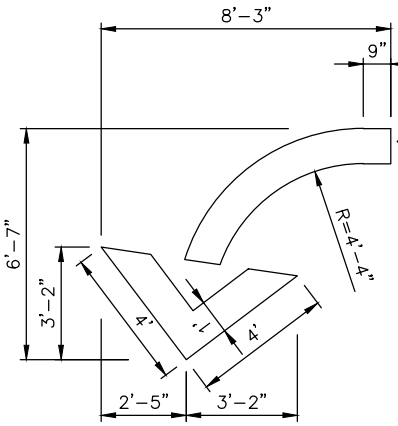

DETAIL A – LEFT

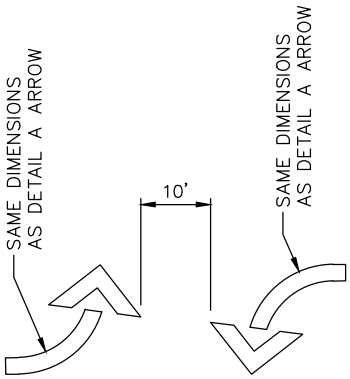

DETAIL C – TWO WAY LEFT TURN

City of Bothell™	**City of Bothell** **PUBLIC WORKS DEPARTMENT**	Approved By: City Engineer	PAVEMENT ARROW MARKINGS	Standard Detail **374** Revision Date Feb, 2012

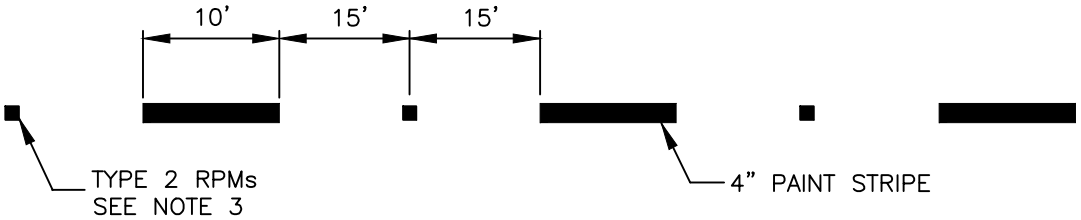

SKIP CENTER & LANE STRIPE

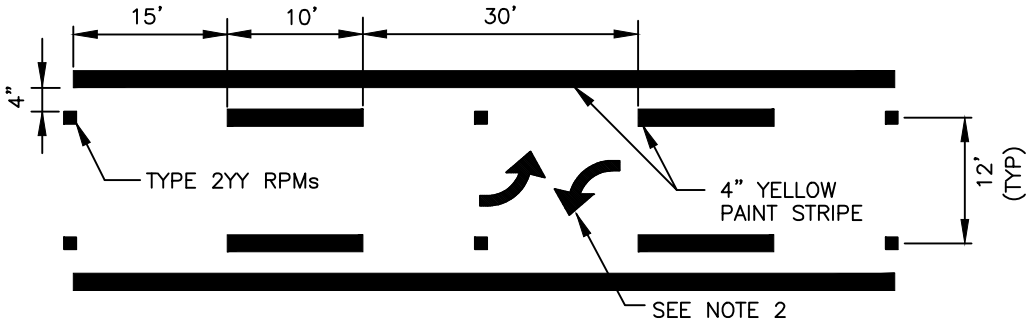

TWO–WAY LEFT TURN

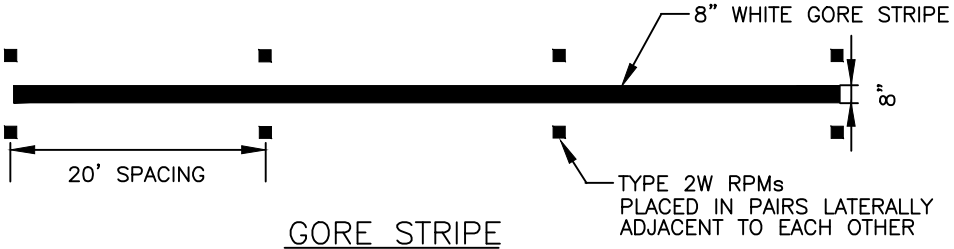

GORE STRIPE

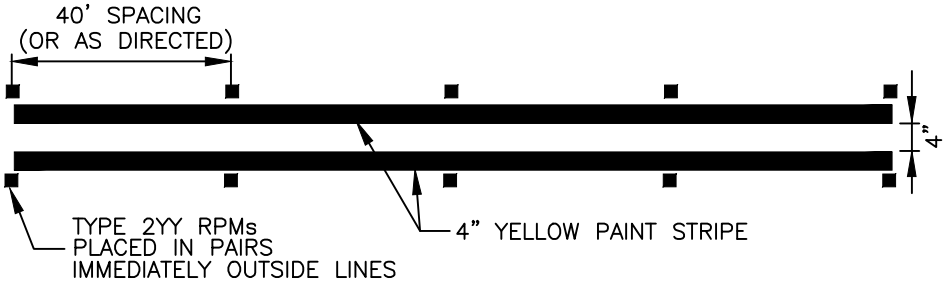

DOUBLE YELLOW CENTER

NOTES:

1. MATCH EXISTING PAVEMENT MARKING DIMENSIONS.
2. SEE STD DETAIL 376 FOR TWO–WAY LEFT TURN ARROW PLACEMENT.
3. RAISED PAVEMENT MARKER COLOR SHALL CONFORM TO THE COLOR OF THE MARKING FOR WHICH THEY SUPPLEMENT, SUBSTITUTE FOR, OR SERVE AS A POSITIONING GUIDE FOR.
4. ALL STRIPING NOTED SHALL BE IN THERMAL PLASTIC.

City of Bothell	**City of Bothell** **PUBLIC WORKS DEPARTMENT**	Approved By: City Engineer	RAISED PAVEMENT LANE MARKING COLLECTOR	Standard Detail **375** Revision Date Feb, 2012

LEFT TURN LANE

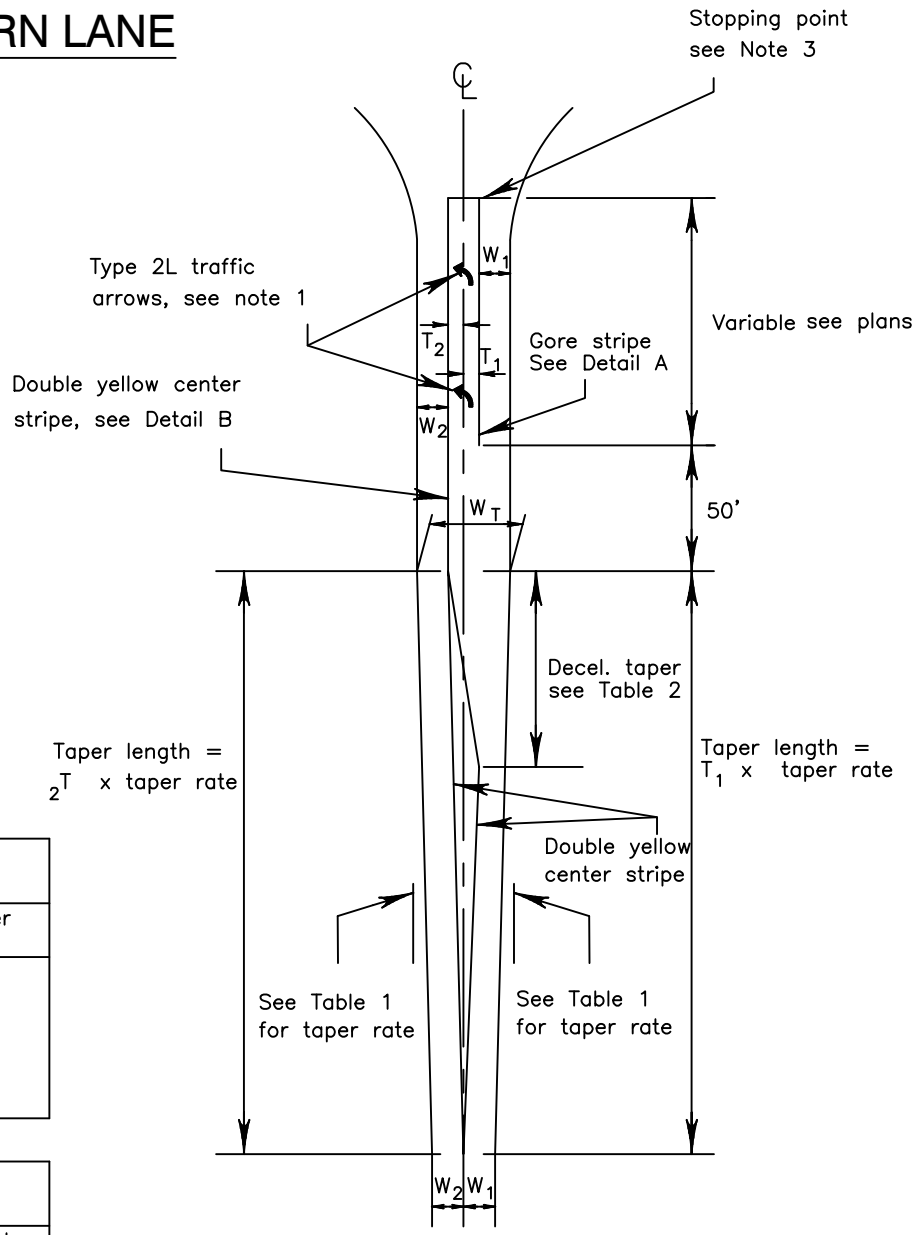

TABLE 1	
Posted Speed	Taper Rate
45 mph	45:1
40 mph	40:1
35 mph	35:1
30 mph	30:1
25 mph	25:1

TABLE 2	
Posted Speed	Decel . Taper Length
45 mph	135'
40 mph	120'
35 mph	105'
30 mph	90'
25 mph	70'

LEGEND

W_1 = Approaching Through Lane

W_2 = Departing Lane

T_1 = Width of Left Turn lane on approach side of ℄

T_2 = Width of Left Turn lane on departure side of ℄

W_1 = Total width of channelization ($W_1 + W_2 + T_1 + T_2$)

NOTES:

1. First Type 2L arrow is installed 50' back of stop bar or crosswalk. Second arrow is located 100' back, or at left turn pocket.
2. Stop bar is to be installed at the stopping point only when mainline movement is controlled by a stop sign or traffic signal.
3. See Std Detail 372 for marker designation.

City of Bothell	**City of Bothell** **PUBLIC WORKS DEPARTMENT**	Approved By: City Engineer	LEFT TURN LANE MARKINGS	Standard Detail **376** Revision Date Jun, 2015

NOTES:

1. DIMENSIONS SHOWN MAY BE MODIFIED TO ACCOMMODATE DRIVEWAYS.
2. SEE ENGINEER FOR POCKET LENGTH AND FOR LAYOUT AND PLACEMENT OF TURN ARROWS.

City of Bothell™	**City of Bothell** **PUBLIC WORKS DEPARTMENT**	Approved By: City Engineer	LEFT TURN AND TWO WAY LEFT TURN LANE MARKINGS	Standard Detail **377** Revision Date Feb, 2012

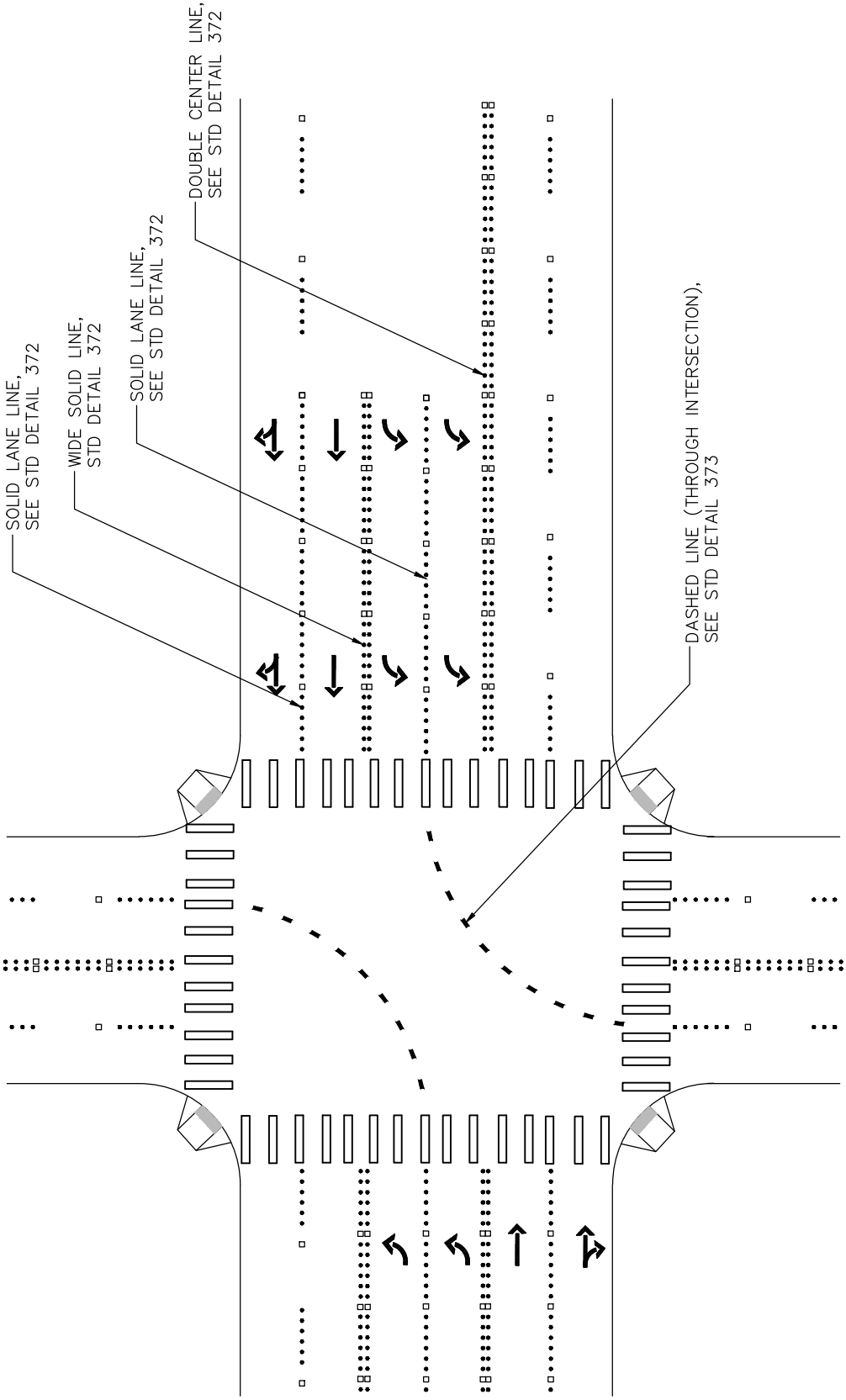

City of Bothell™	**City of Bothell** **PUBLIC WORKS DEPARTMENT**	Approved By: City Engineer	INTERSECTION CHANNELIZATION MARKINGS	Standard Detail **378** Revision Date Feb, 2012

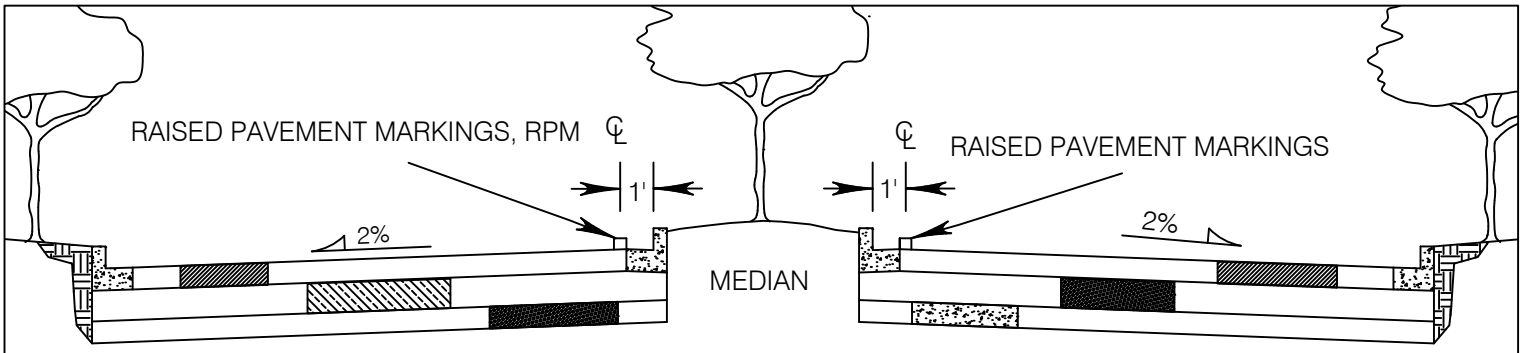

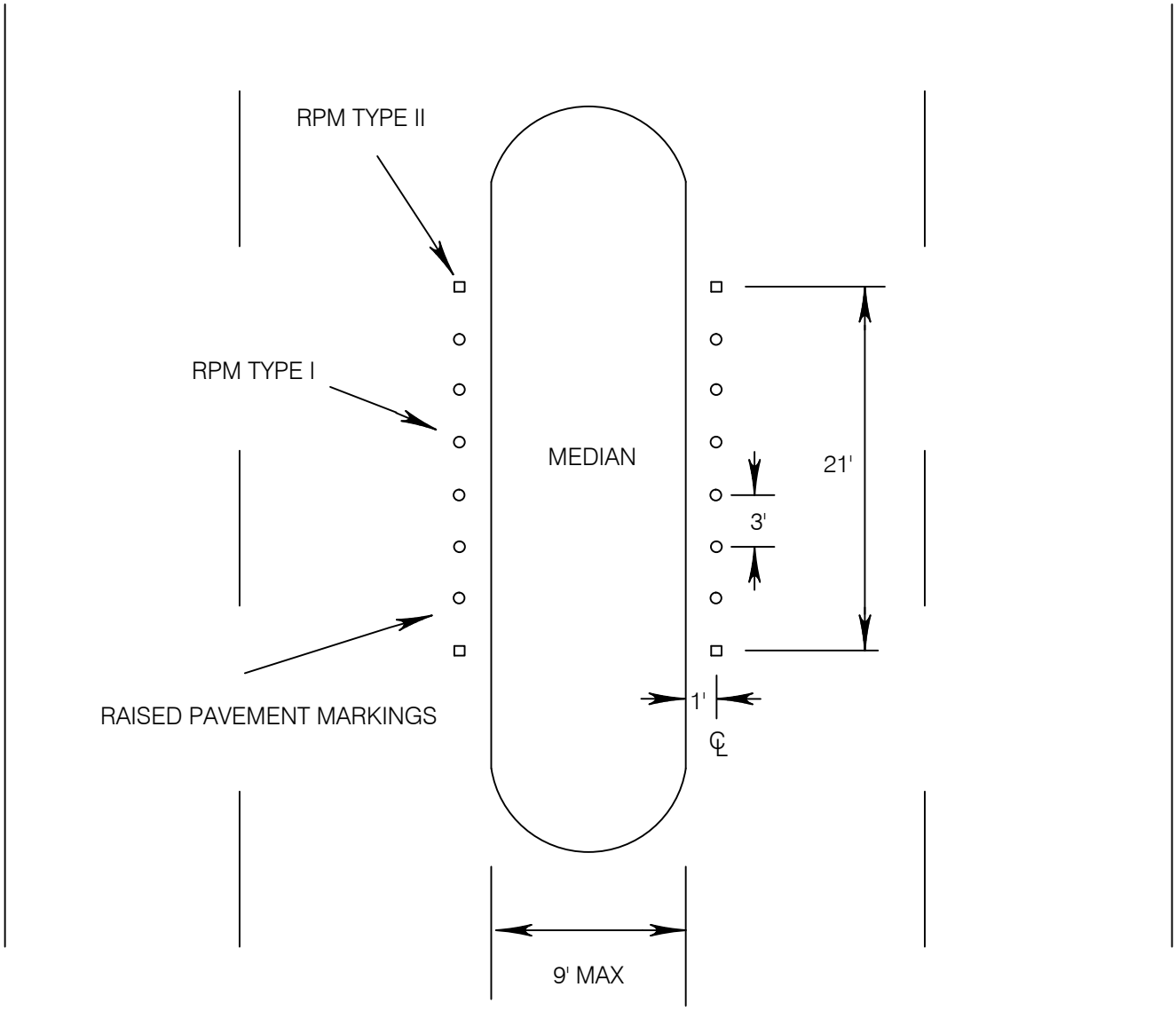

City of Bothell™

City of Bothell

PUBLIC WORKS DEPARTMENT

Approved By:

City Engineer

LOCATION OF RPMs

Standard Detail

379

Revision Date

Dec, 2016

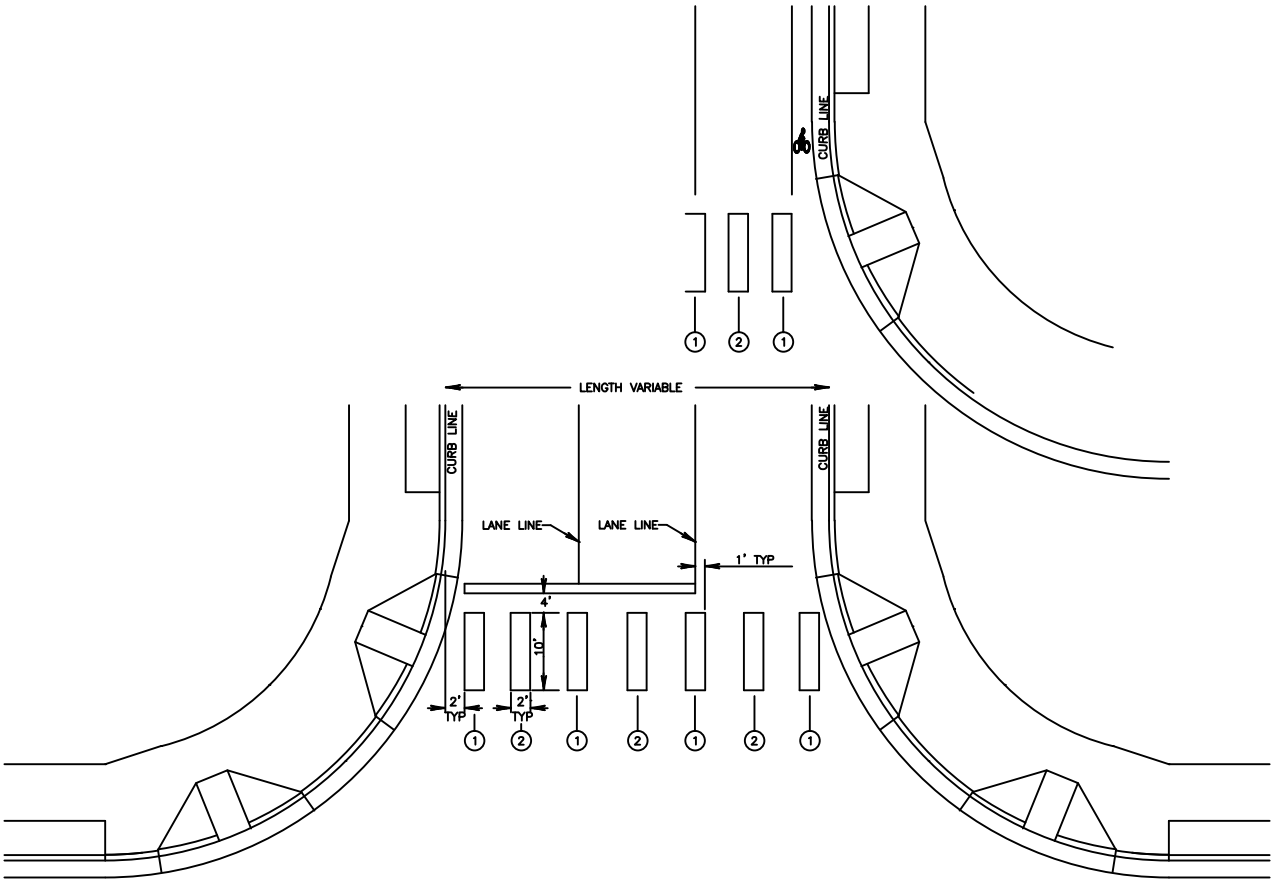

1 LANE LINE STRIP: THIS IS LOCATED IN THE LINE WITH EACH LANE LINE AND HALF THE STRIP ON EACH SIDE.
IF TYPE II OR III BIKE LANES PUT OUTSIDE AND BAR IN ALIGNMENT.

2 MID LINE STRIP: THIS IS LOCATED MID WAY BETWEEN EACH LANE LINE STRIP.

NOTE:
THERMOPLASTIC MATERIALS SHALL BE USED UNLESS OTHERWISE DIRECTED BY ENGINEER.

City of Bothell™	**City of Bothell** **PUBLIC WORKS DEPARTMENT**	Approved By: City Engineer	TYPICAL CROSSWALK STRIPING	Standard Detail **380** Revision Date Feb, 2012

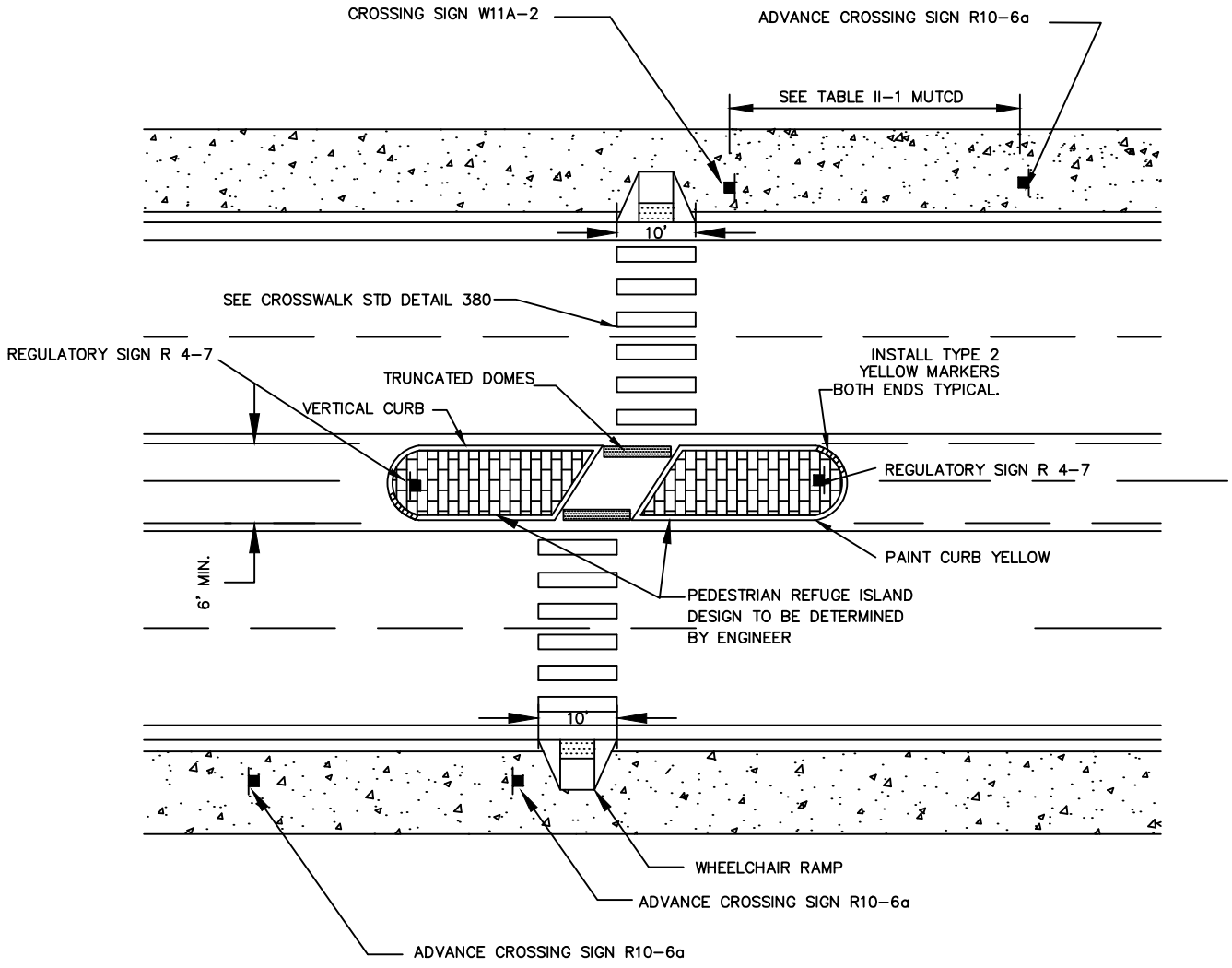

City of Bothell™	**City of Bothell** **PUBLIC WORKS DEPARTMENT**	Approved By: City Engineer	MEDIAN CROSSWALK	Standard Detail **381** Revision Date Feb, 2012

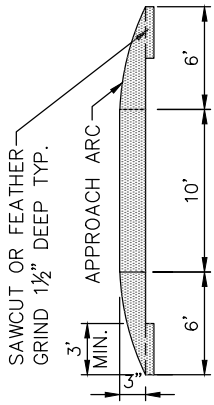

SECTION A–A

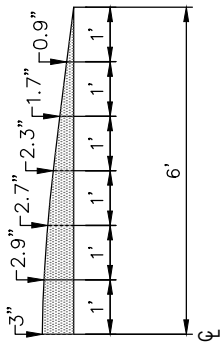

APPROACH ARC DETAIL

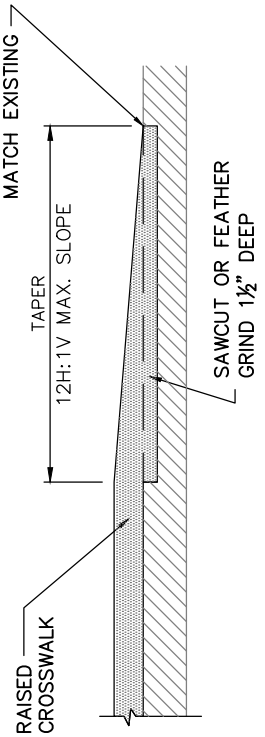

RAISED CROSSWALK/ASPHALT WIDENING SECTION

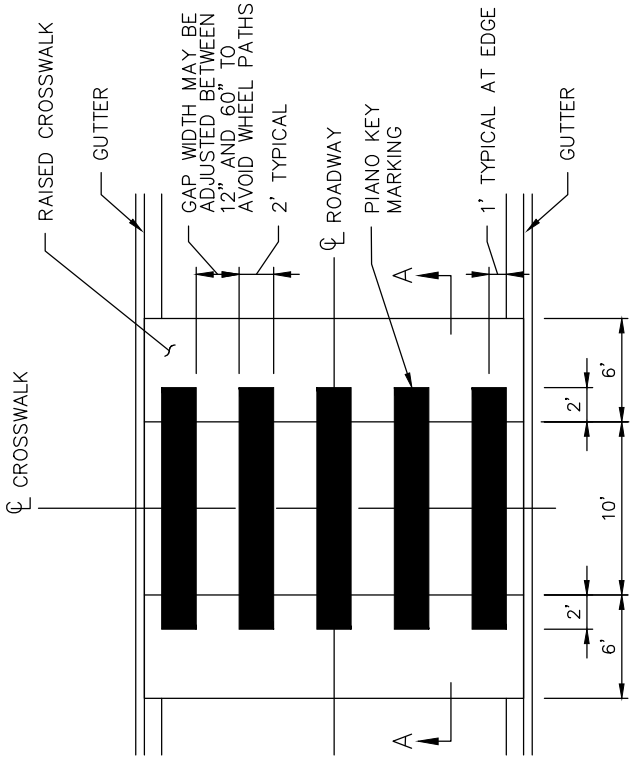

MARKING DETAIL

City of Bothell

City of Bothell

PUBLIC WORKS DEPARTMENT

Approved By:

City Engineer

RAISED CROSSWALK

Standard Detail

382

Revision Date

Feb, 2012

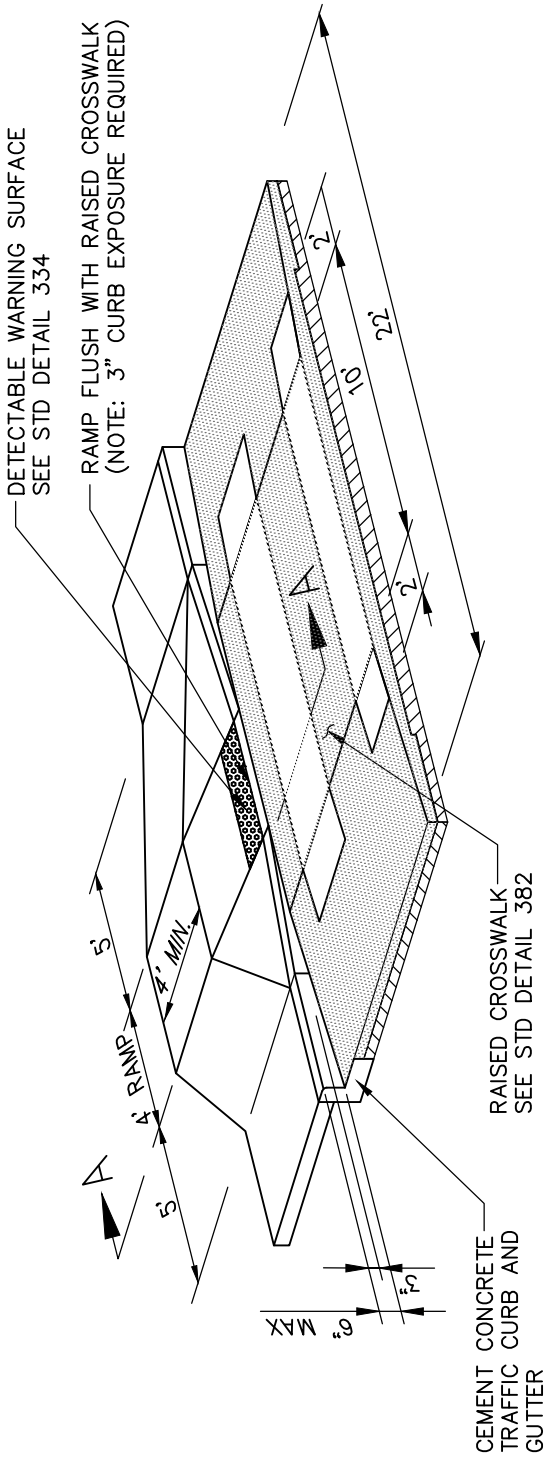

MODIFIED SIDEWALK RAMP TYPE 1

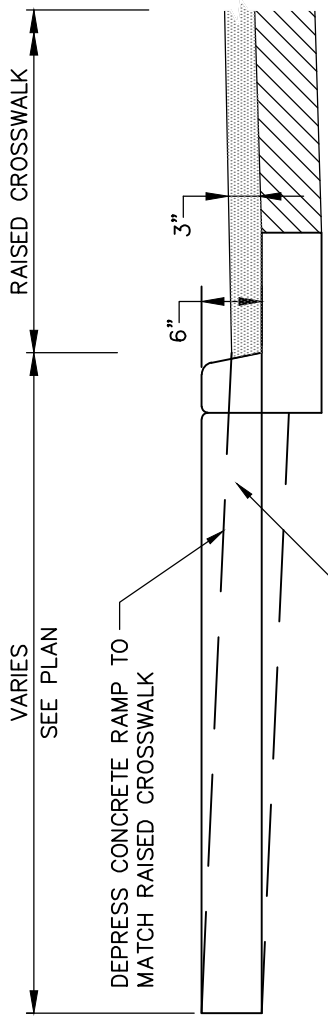

SECTION A–A

City of Bothell	**City of Bothell** **PUBLIC WORKS DEPARTMENT**	Approved By: City Engineer	RAISED CROSSWALK ADJACENT TO SIDEWALK RAMP	Standard Detail **383** Revision Date Feb, 2012

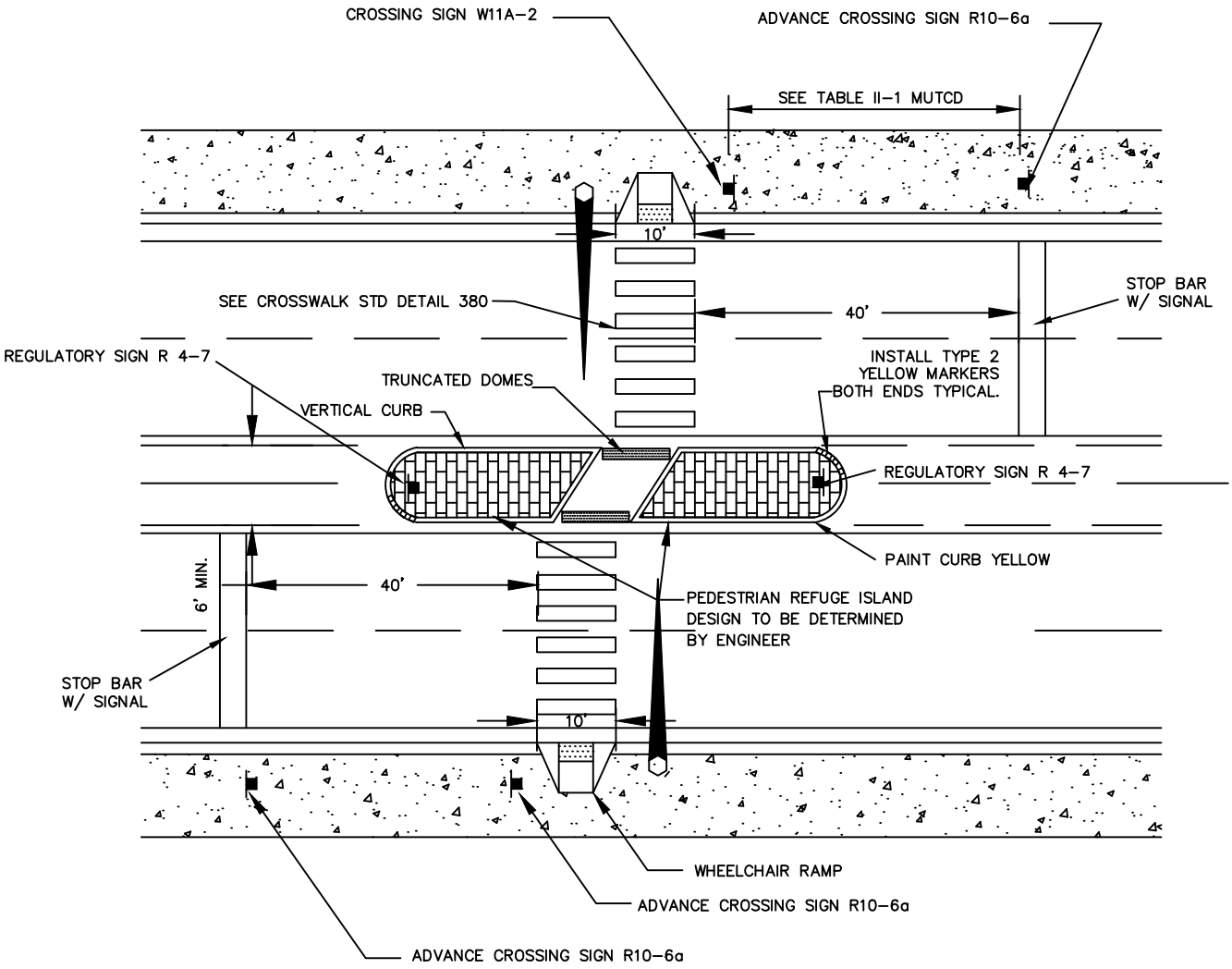

City of Bothell	**City of Bothell** **PUBLIC WORKS DEPARTMENT**	Approved By: City Engineer	MEDIAN CROSSWALK SIGNALIZED	Standard Detail **384** Revision Date Feb, 2012

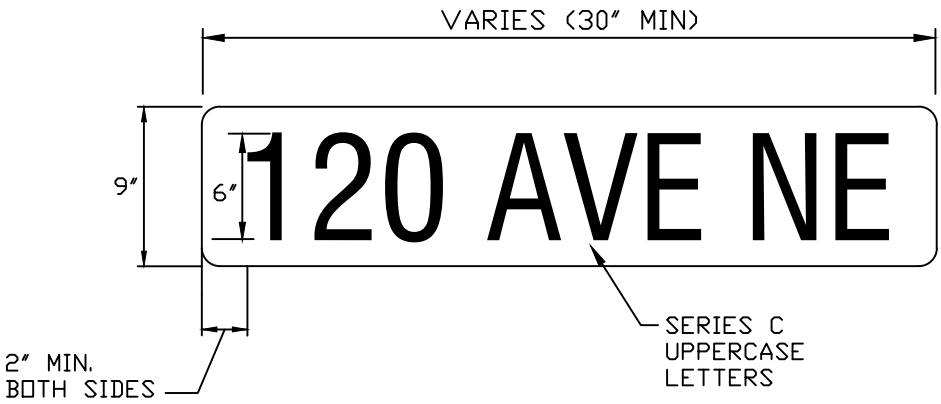

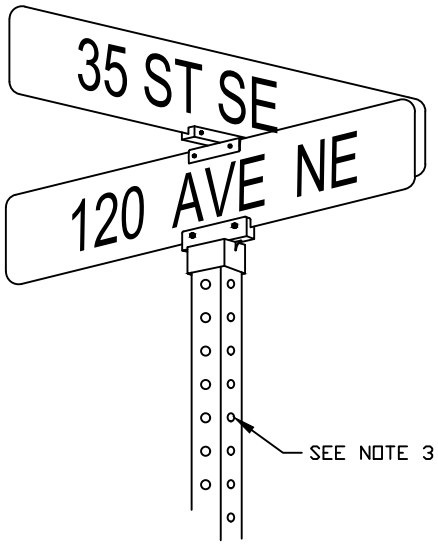

NOTES:

1. SIGN:
   9"x VARIES (MIN. 30"), EXTRUDED ALUMINUM, TREATED.

2. BACKGROUND AND COPY:
   WHITE LETTERS ON GREEN BACKGROUND. USE 3M HIGH INTENSITY PRISMATIC REFLECTIVE, 6" UPPERCASE, C SERIES LETTERS OVER 3M HIGH INTENSITY PRISMATIC REFLECTIVE SHEETING, OR SCREEN WHITE INK ONTO GREEN 3M HIGH INTENSITY PRISMATIC REFLECTIVE SHEETING.

3. POST:
   2"x2" TELESPAR SQUARE METAL POST.

4. HARDWARE:
   SQUARE METAL POST: 850 EXL2 CAP, 850 EX90 CROSSPIECE (ZUMAR OR APPROVED EQUAL).

City of Bothell™	**City of Bothell** **PUBLIC WORKS DEPARTMENT**	Approved By: City Engineer	STREET NAME SIGN POST MOUNTED COLLECTOR AND LOCAL ACCESS STREETS	Standard Detail **385** Revision Date Dec, 2016

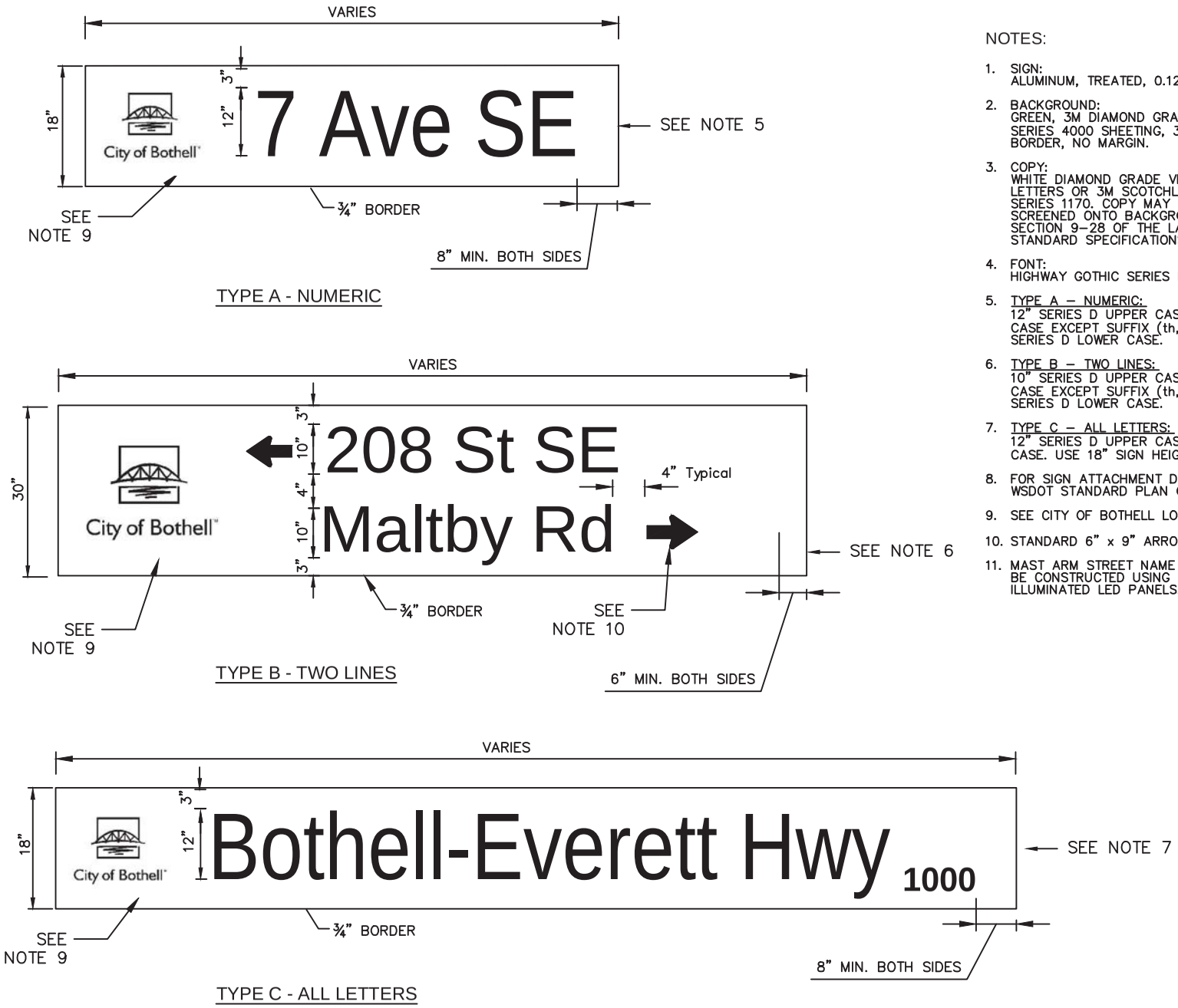

NOTES:

1. SIGN:
   ALUMINUM, TREATED, 0.125 GAUGE.
2. BACKGROUND:
   GREEN, 3M DIAMOND GRADE CUBED SERIES 4000 SHEETING, 3/4" WHITE BORDER, NO MARGIN.
3. COPY:
   WHITE DIAMOND GRADE VIP CUT-OUT LETTERS OR 3M SCOTCHLITE EC FILM SERIES 1170. COPY MAY ALSO BE SCREENED ONTO BACKGROUND, SEE SECTION 9-28 OF THE LATEST WSDOT STANDARD SPECIFICATIONS.
4. FONT:
   HIGHWAY GOTHIC SERIES D.
5. TYPE A - NUMERIC:
   12" SERIES D UPPER CASE AND LOWER CASE EXCEPT SUFFIX (th,st,etc) IS 10" SERIES D LOWER CASE.
6. TYPE B - TWO LINES:
   10" SERIES D UPPER CASE AND LOWER CASE EXCEPT SUFFIX (th,nd,rd.) IS 8" SERIES D LOWER CASE.
7. TYPE C - ALL LETTERS:
   12" SERIES D UPPER CASE AND LOWER CASE. USE 18" SIGN HEIGHT.
8. FOR SIGN ATTACHMENT DETAILS, SEE WSDOT STANDARD PLAN G-9b.
9. SEE CITY OF BOTHELL LOGO GUIDELINES.
10. STANDARD 6" x 9" ARROW.
11. MAST ARM STREET NAME SIGNS SHALL BE CONSTRUCTED USING INTERNALLY ILLUMINATED LED PANELS.

City of Bothell

City of Bothell

PUBLIC WORKS DEPARTMENT

Approved By:

City Engineer

STREET NAME SIGNS
TYPES A,B,C ON
MAST ARM

Standard Detail

386

Revision Date
Feb, 2012

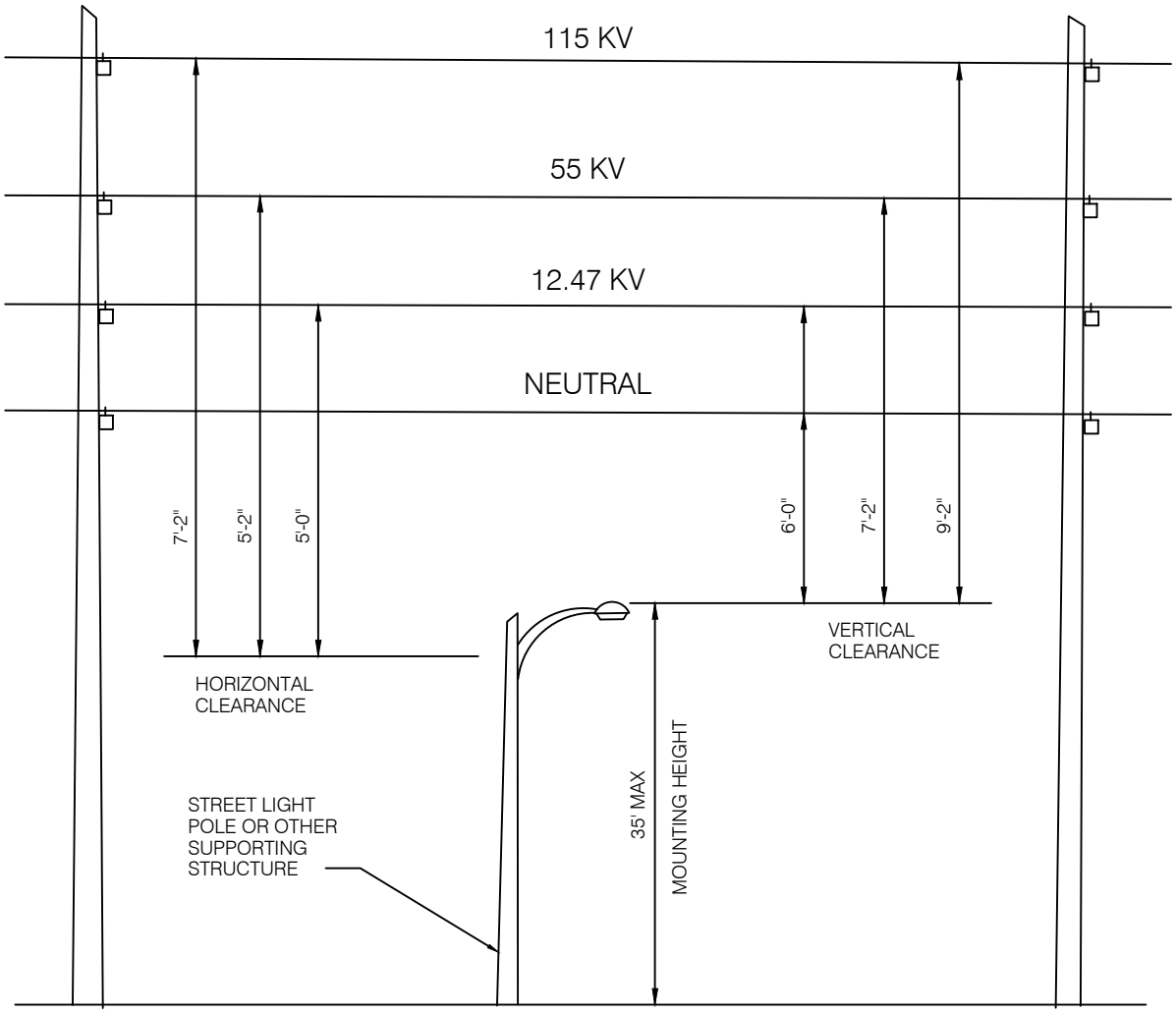

NOTES:

1. FOR ADDITIONAL INFORMATION ON MIN. CLEARANCES REFER TO P.U.D. No. 1 CONSTRUCTION STANDARDS SECTION 4
2. ALL FINAL INSTALLATION CLEARANCES FROM EXISTING UTILITIES MUST BE APPROVED BY THE AFFECTED UTILITY.

City of Bothell™	**City of Bothell** **PUBLIC WORKS DEPARTMENT**	Approved By: City Engineer	LUMINARY MOUNTING HEIGHT AND UTILITY CLEARANCES	Standard Detail **387** Revision Date Nov, 2013

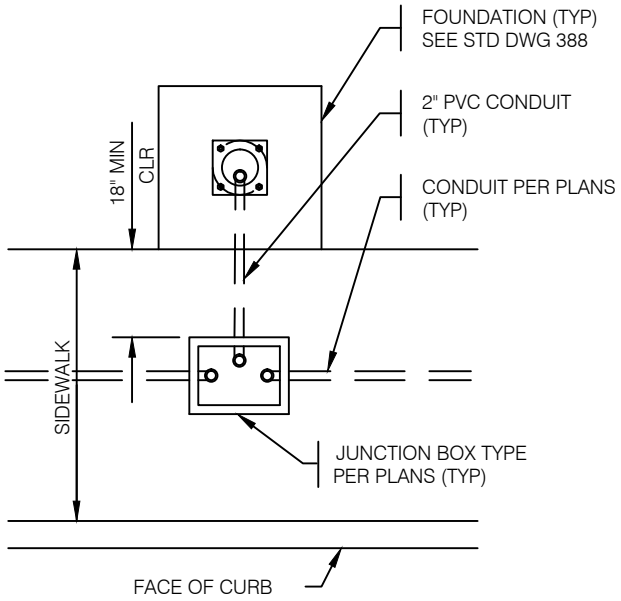

CONDITION 1

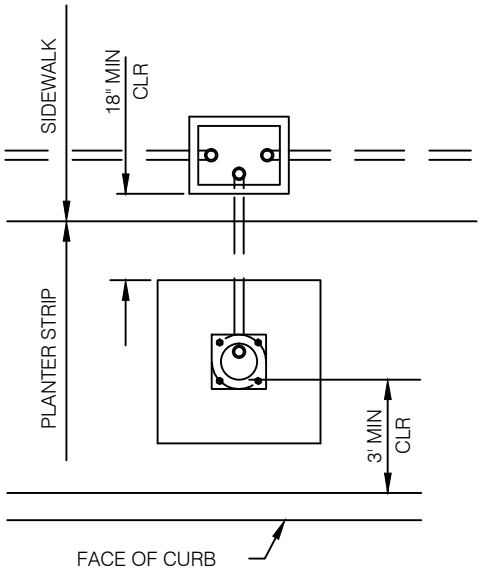

CONDITION 2

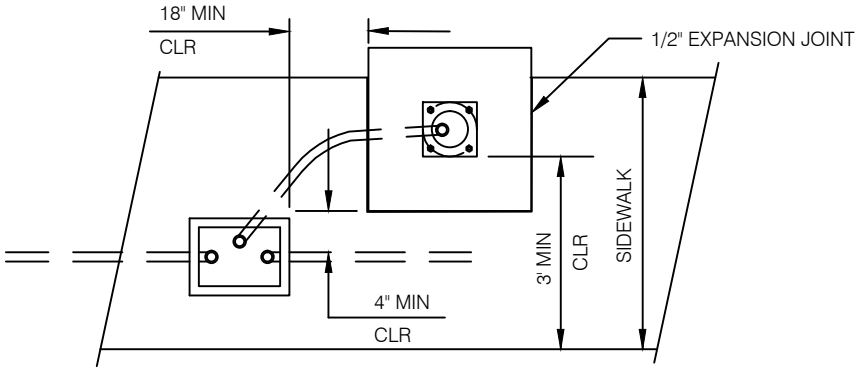

NOTES:

1. IF POLE FOUNDATION FALLS WITHIN SIDEWALK AREA, TOP OF FOUNDATION WILL BE FLUSH WITH FINISHED SIDEWALK AND BE FINISHED IN THE SAME MANNER AS SIDEWALK.

2. 1/2" EXPANSION JOINT WILL BE PLACED BETWEEN FOUNDATION AND SIDEWALK.

CONDITION 3

GENERAL NOTES:

1. CONDITION 1 & 2 ARE NORMAL INSTALLATION OPTIONS DEPENDING ON STREET DESIGN.

2. CONDITION 3 INSTALLATION IS ALLOWED WITH APPROVAL OF DIRECTOR WHERE EXISTING R/W OR PHYSICAL CONDITIONS WARRANT THIS TYPE INSTALLATION.

City of Bothell™	**City of Bothell** **PUBLIC WORKS DEPARTMENT**	Approved By: City Engineer	STREET LIGHT LOCATION ALTERNATES	Standard Detail **388** Revision Date Nov, 2013

SIGN OR PAVEMENT LETTERING REQUIRED, NOT BOTH

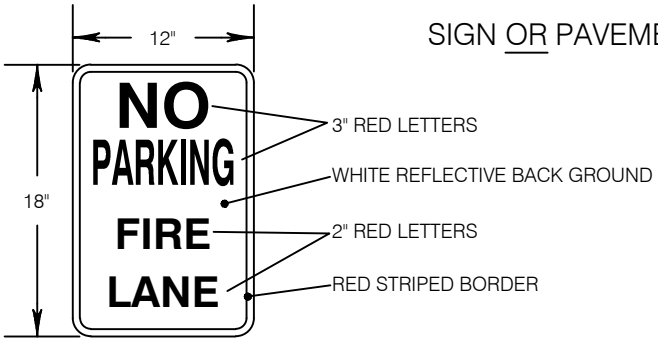

SIGN DETAIL

SIGN TO FACE TRAFFIC-FLOW AND SHALL OCCUR BETWEEN EACH PAVEMENT MARKING AND AT EACH END OF FIRE LANE.

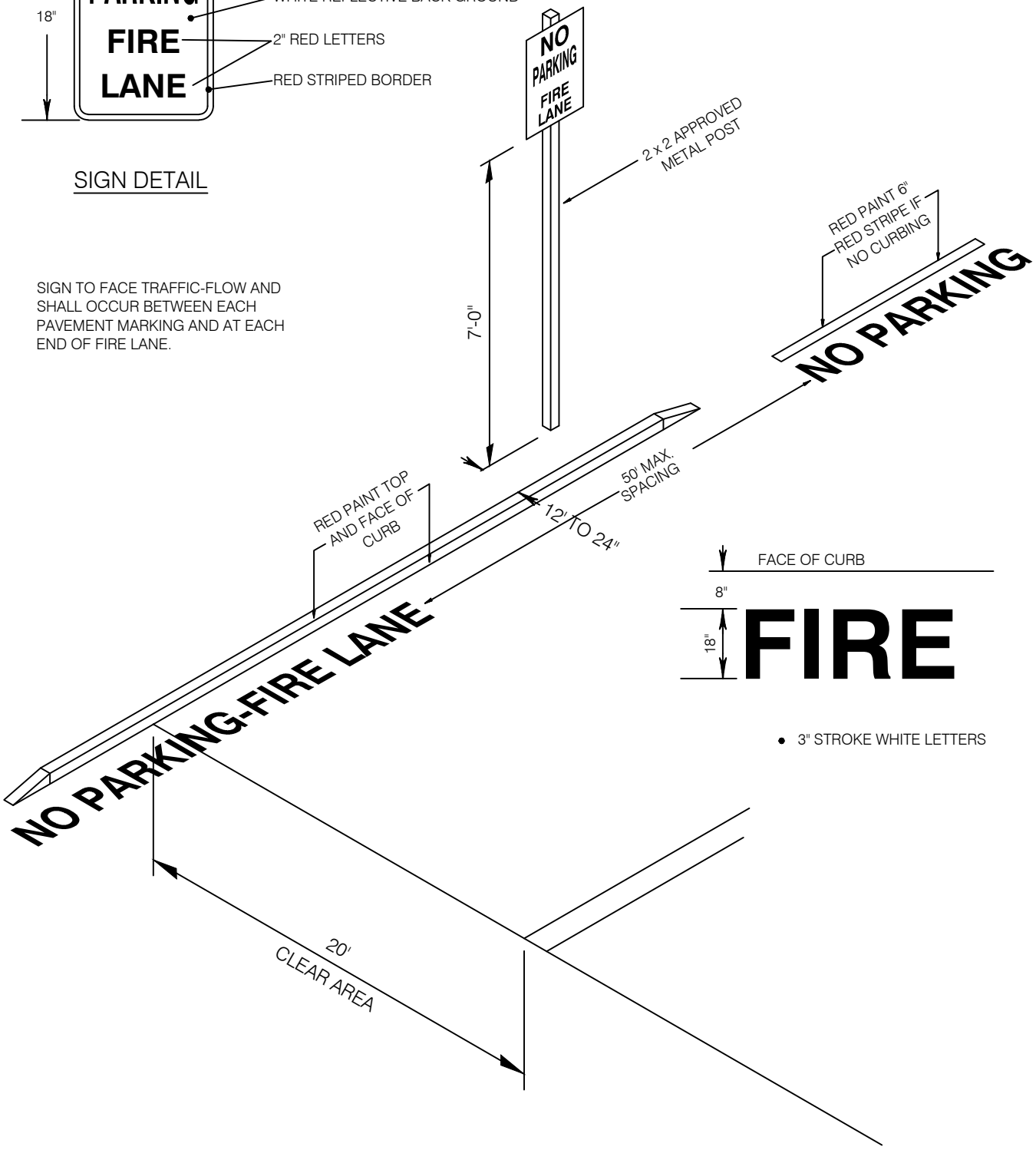

City of Bothell PUBLIC WORKS DEPARTMENT	Approved By: City Engineer	FIRE LANE MARKINGS AND SIGNAGE	Standard Detail **389** Revision Date Nov, 2013

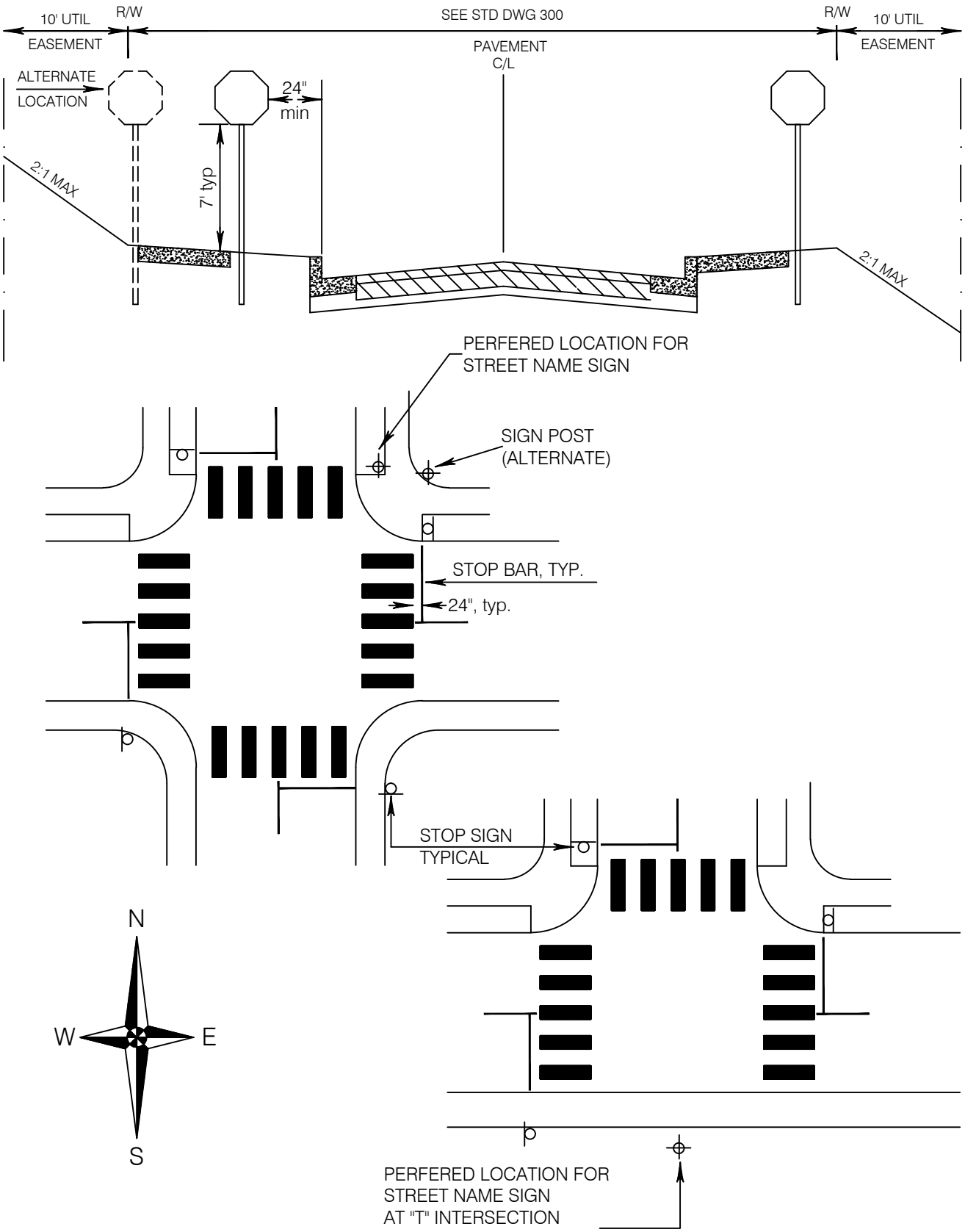

City of Bothell™	**City of Bothell** **PUBLIC WORKS DEPARTMENT**	Approved By: City Engineer	TYPICAL SIGN LOCATION AT INTERSECTION	Standard Detail **390** Revision Date Nov, 2013

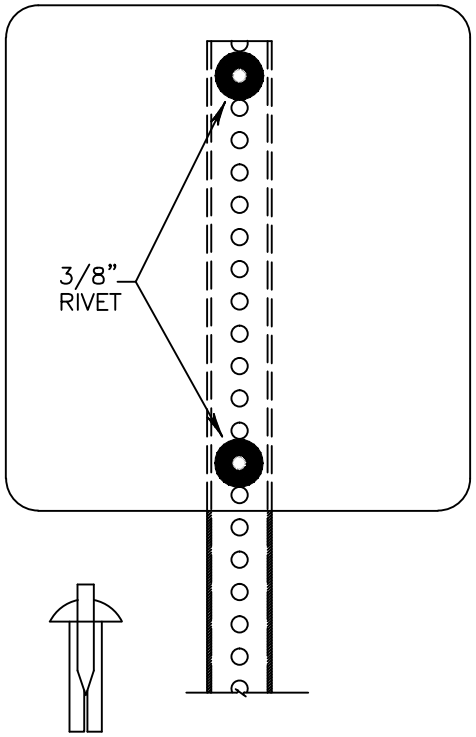

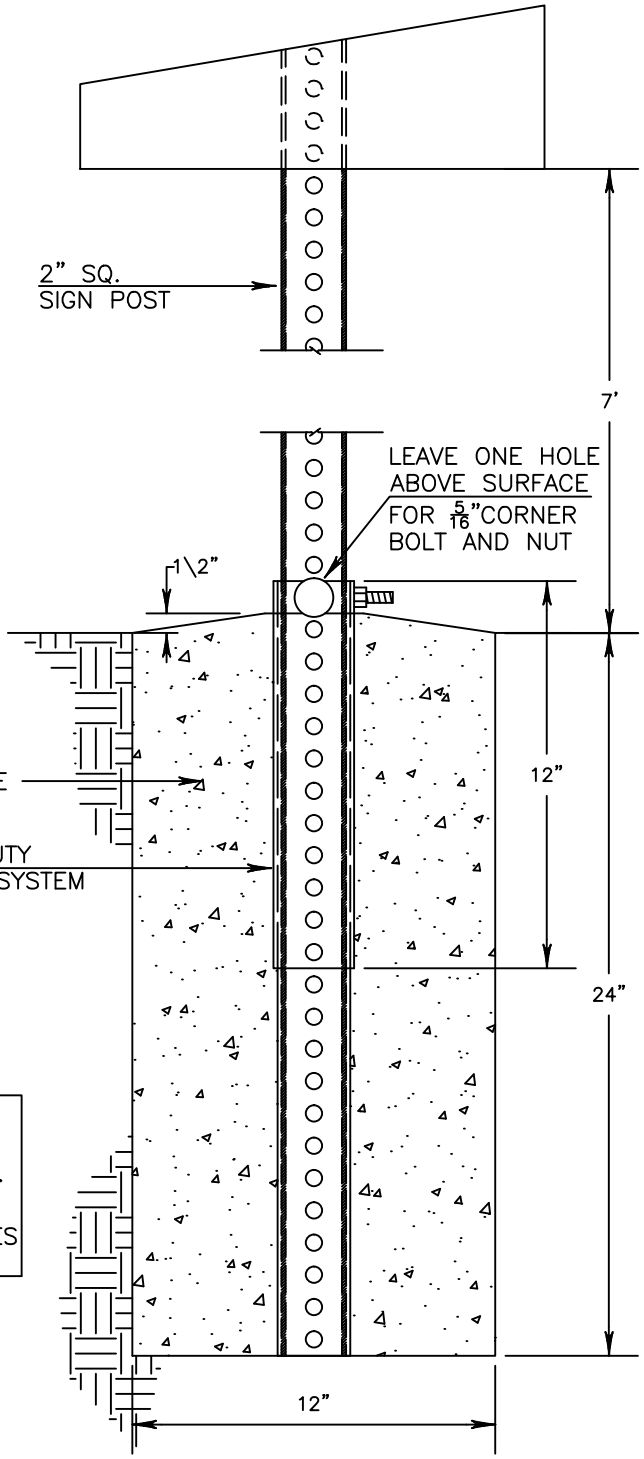

DRIVE RIVET
TL–3806

CORNER BOLT
TL070

JAM NUT
TL062

SQUARE TUBE SIZE	WALL THICKNESS U.S. STD. GAGE AND INCH	WT/FT LBS.	
2" X 2"	12(.105)	2.416	7/16" DIA. HOLES AT 1" O.C. FOUR SIDES
$2\frac{1}{4}$" X $2\frac{1}{4}$"	12(.105)	2.773	
$2\frac{1}{2}$" X $2\frac{1}{2}$"	12(.105)	3.141	

NOTES

1 ALL TUBE STEEL TO BE GALVANIZED AND UNPAINTED.
2 THE POST SHALL BE CENTERED.
3 WRAP DUCT TAPE AROUND 2' AND 1" LONG ANCHORS AND COVER BOTTOM OF 2' ANCHOR WITH TAPE.

City of Bothell

City of Bothell

PUBLIC WORKS DEPARTMENT

Approved By:
City Engineer

SIGN POST INSTALLATION

Standard Detail
391
Revision Date
Feb, 2012

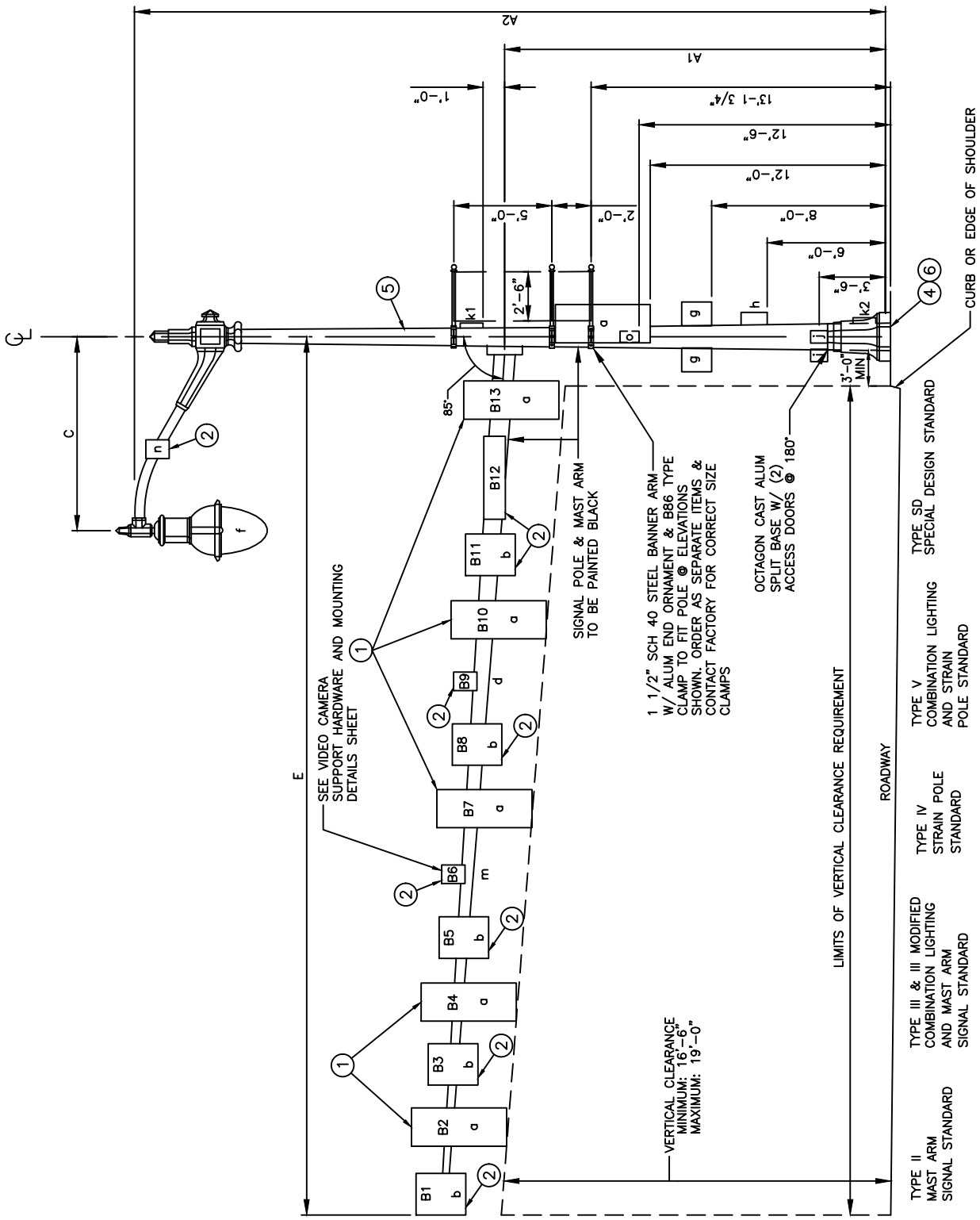

City of Bothell

City of Bothell

PUBLIC WORKS DEPARTMENT

Approved By:

City Engineer

SIGNAL POLE DETAILS - 1

Standard Detail

392

Revision Date

Feb, 2012

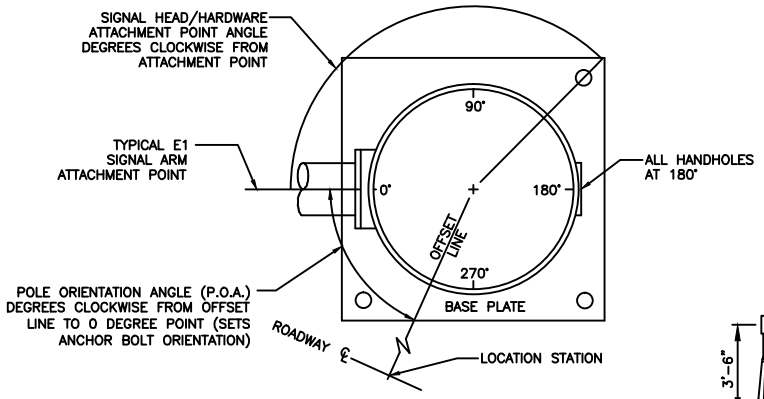

POLE ORIENTATION &
ATTACHMENT POINT DETAIL
PLAN VIEW

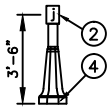

TYPE PPB
PPB POST

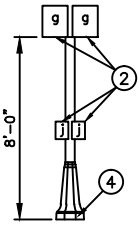

TYPE PS
PED. HEAD
STANDARD

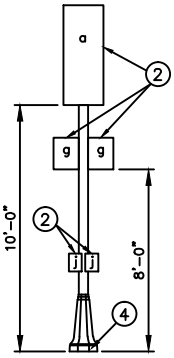

TYPE I
VEHICLE HEAD
STANDARD

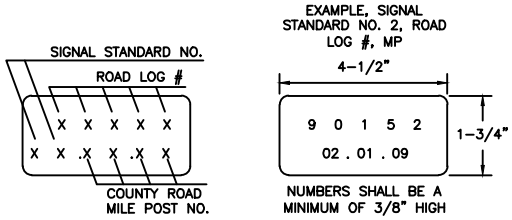

SIGNAL STANDARD IDENTIFICATION TAG DETAIL

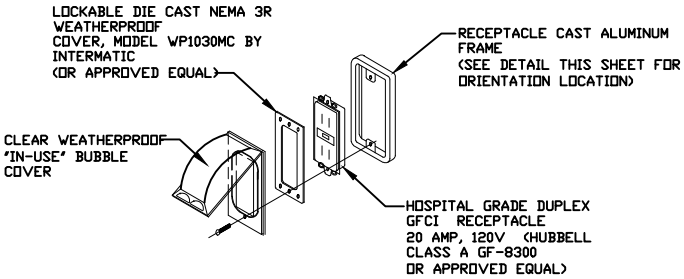

POLE RECEPTACLE DETAIL

LEGEND

a. VEHICLE SIGNAL HEAD
b. SIGN, WSDOT STD. PLAN G-30.10-00
c. LUMINAIRE ARM (SEE IP SHEETS)
d. PRE-EMPT DETECTOR
e. SIGNAL MAST ARM
f. LUMINAIRE
g. PEDESTRIAN SIGNAL HEAD
h. TERMINAL CABINET
j. PEDESTRIAN PUSHBUTTON ASSEMBLY, WSDOT STD. PLAN J-20.26-00
k. HANDHOLE, WSDOT STD. PLAN J-7c OR J-28.50-00
m. VIDEO CAMERA
n. PAN-TILT-ZOOM (PTZ) CAMERA
o. POLE RECEPTACLE

NOTES:

1. MOUNTING TENON TO BE INSTALLED BY FABRICATOR AT OFFSET DISTANCES INDICATED IN CHART. IF TYPE "N" MOUNTING IS USED, DRILL 1" HOLE IN MAST ARM AND INSTALL PLASTIC SPLIT BUSHING FOR CABLE ENTRANCE.
2. FIELD INSTALLED.
3. NOT USED THIS SHEET.
4. FOUNDATIONS SHALL CONFORM TO THE MOST RECENT SNOHOMISH COUNTY DETAILS
5. ALL TYPE III SIGNAL STANDARDS AND STREET LIGHT STANDARDS SHALL HAVE BOLT ON LUMINAIRE ARMS. THE BOLTS AND/OR NUTS SHALL BE FIELD INSTALLED AND BE ACCESSIBLE AFTER INSTALLATION FROM OUTSIDE OF POLE.
6. ANCHOR BOLTS AND ANCHOR PLATE SUPPLIED BY SIGNAL POLE MANUFACTURER.

* INSTALL TENON FOR FUTURE DISPLAY.
** TOP OF POLE FOUNDATION ELEVATION IS TO BE VERIFIED BY ENGINEER AFTER SIDEWALK GRADES ARE SET.
\+ WIND LOAD CALCULATIONS BASED ON FUTURE LOADINGS.

City of Bothell™	**City of Bothell** **PUBLIC WORKS DEPARTMENT**	Approved By: City Engineer	SIGNAL POLE DETAILS - 2	Standard Detail **393** Revision Date Jun, 2015

SIGNAL STANDARD DETAIL CHART

SIGNAL STD. NO.	FIELD LOCATION			TYPE	MOUNTING HEIGHT (FT)		ARM LENGTH (FT)		OFFSET DISTANCES (FT) (Z) (POLE CL TO ATTACHMENT POINT)											
	STATION	OFFSET (FT)	P.O.A.		A1	A2	E	C	B1	B2	B3	B4	B5	B6	B7	B8	B9	B10	B11	B12
1	15+69.3	39.3' (RT)	90°	III	17.5	25, 25	55	6, 6		52		42								12
2	15+70.2	54.2' (LT)	0°	III	17.5	25, 25	45	6, 6		41.5		28.5					6,34	38.5		13
3	16+76.5	40.9' (RT)	0°	III	17.5	25, 25	40	6, 6		37		25			13					8
4	15+93.4	65.2' (LT)	0°	LT.STD.		25, 25		6, 6												
5	16+57.5	62.6' (LT)	0°	LT.STD.		25, 25		6, 6												
6	16+77.7	44.4' (LT)	0°	LT.STD.		25, 25		6, 6									0,0			

SIGNAL STD. NO.	(X)(Y)(Z) TOTAL (FT^3)	POLE ATTACHMENT POINT ANGLES (DEG.)										FOUNDATION DEPTH (FT)			BOTTOM OF FLANGE ELEVATION	TOP OF FOUNDATION ELEVATION	REMARKS
		a/b	c	d	e	g	h	j1	j2	k1	k2	3' RD	3' SQ	4' RD			
1	960.8		45°,315°		0°	180°	90°	90°		180°	180°	10					
2	1102.2	180°	45°,315°	90°,285°	0°	90°	180°	270°		180°	180°	13					
3	754.0		45°,315°		0°	270°	180°	270°		180°	180°	15					
4			45°,315°			90°		90°			180°						PER WSDOT STD. PLAN J-28.30-01
5		85°	45°,315°			270°		270°			180°						PER WSDOT STD. PLAN J-28.30-01
6			75°,135°	75°,135°		90°		90°			180°						PER WSDOT STD. PLAN J-28.30-01

SIGNAL STD. NO.	WINDLOAD AREAS (FT) (X)(Y)										
	B1	B2	B3	B4	B5	B7	B8	B10	B11	B12	B13
1		9.2		9.2						8	
2		9.2		9.2				9.2		8	
3		9.2		9.2		9.2				8	
4											
5											
6											

* INSTALL TENON FOR FUTURE DISPLAY.

** TOP OF FOUNDATION ELEVATION IS TO BE VERIFIED BY ENGINEER AFTER SIDEWALK GRADES ARE SET

\+ WIND LOAD CALCULATIONS BASED ON FUTURE LOADINGS.

City of Bothell

City of Bothell

PUBLIC WORKS DEPARTMENT

Approved By:

City Engineer

SIGNAL POLE DETAILS - 3

Standard Detail

394

Revision Date

Feb, 2012

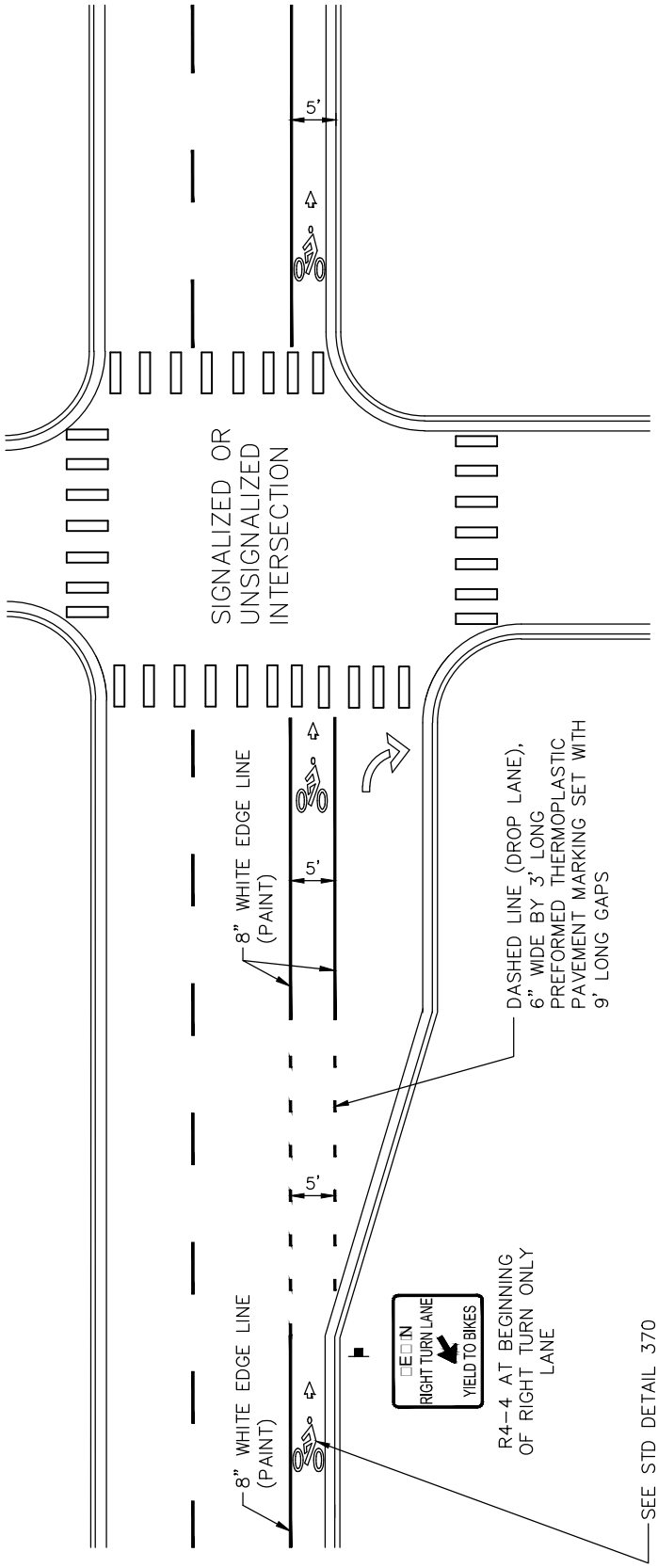

City of Bothell™	**City of Bothell** **PUBLIC WORKS DEPARTMENT**	Approved By: City Engineer	BIKE LANE TREATMENT AT RIGHT TURN POCKET	Standard Detail **395** Revision Date Nov, 2013

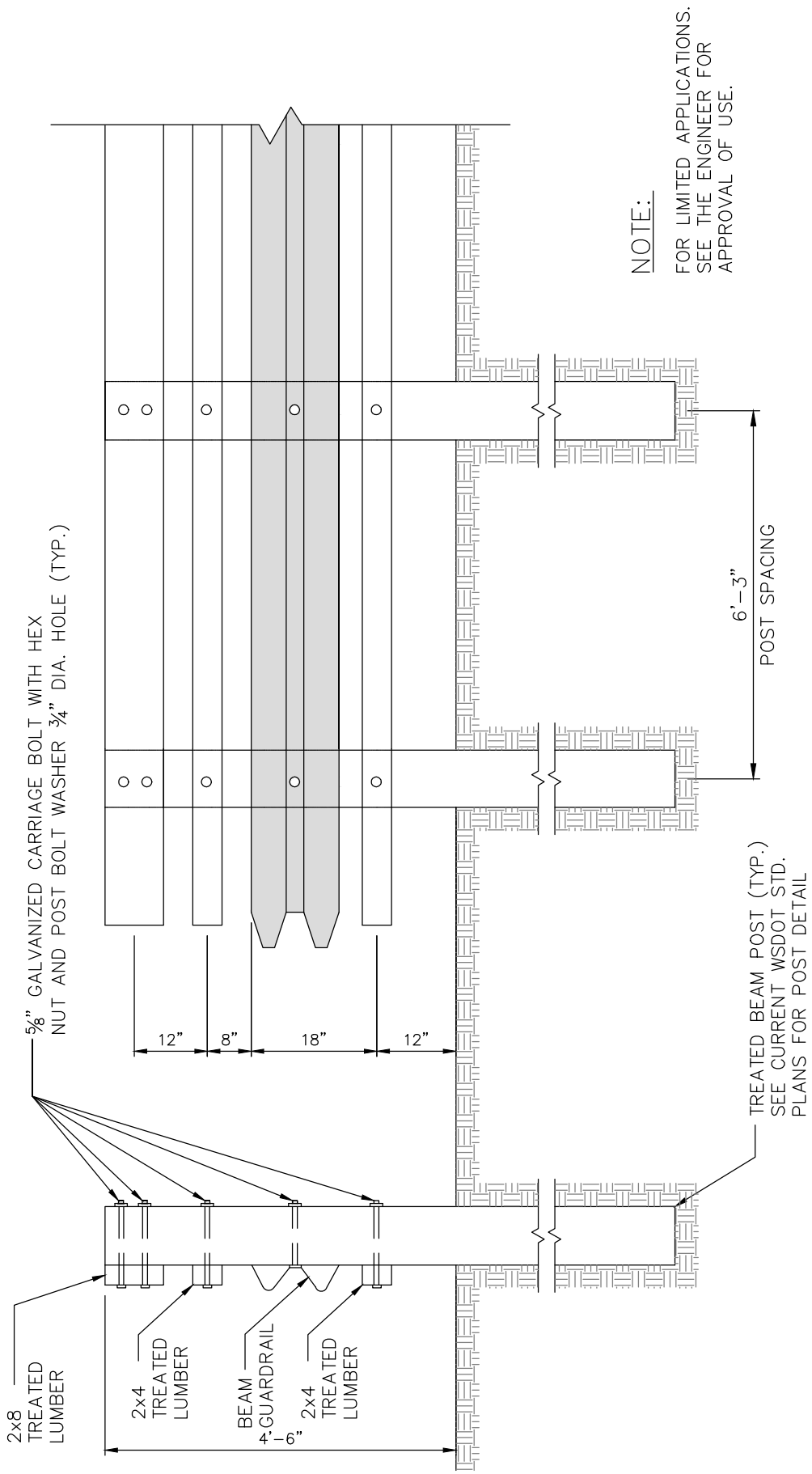

City of Bothell™

City of Bothell

PUBLIC WORKS DEPARTMENT

Approved By:

City Engineer

COMBINATION GUARDRAIL & HANDRAIL

Standard Detail

396

Revision Date

Nov, 2013

R7-1

12" x 18"

PLACE 50 FEET ON CENTER ON PUBLIC STREETS FLUSH
WITH CURB SET BACK 12" - 14" FROM CURB FACE

City of Bothell™	**City of Bothell** **PUBLIC WORKS DEPARTMENT**	Approved By: City Engineer	NO PARKING FIRE LANE PUBLIC STREETS	Standard Detail **397** Revision Date Nov, 2013

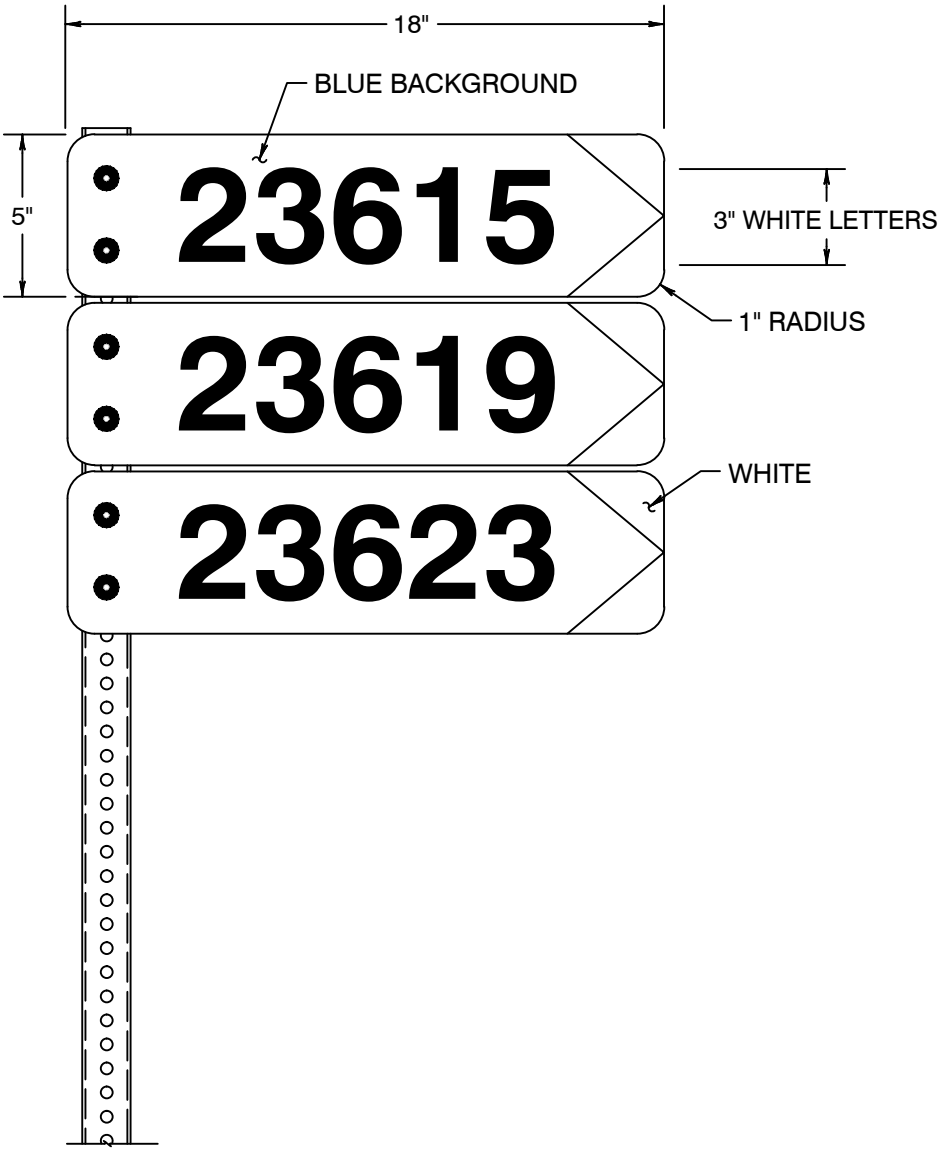

NOTES:

1. ALL ADHESIVE MATERIALS TO BE SUPER ENGINEERING GRADE.

2. MATERIAL SHALL BE 10 GA. ANODIZED ALUMINUM SHEET STOCK UNLESS OTHERWISE SPECIFIED.

3. ADDRESS ON BOTH SIDES.

4. MOUNT ON 2" SQ. SIGN POST - SEE STD 391.

City of Bothell™	**City of Bothell** **PUBLIC WORKS DEPARTMENT**	Approved By: City Engineer	POST MOUNTING ADDRESS SIGNS	Standard Detail **398** Revision Date Nov, 2013

32615

Distance	Size
0 - 50 feet	6
51 - 100 feet	8
101 - 150 feet	10
151 - 200 feet	12
over 200 feet	14

1. DISTANCE IS MEASURED FROM THE FACE OF THE BUILDING TO THE FACE OF CURB ON ADDRESSED STREET

2. NUMBERS SHALL BE CONTRASTING COLOR TO BACKGROUND

3. NUMBER SIZE EQUATES TO LETTER HEIGHT 6"-10" SHALL BE 1"STROKE AND 12" - 14" NUMBERS SHALL BE 1 1/2" STROKE

City of Bothell™	**City of Bothell** **PUBLIC WORKS DEPARTMENT**	Approved By: City Engineer	BUILDING ADDRESS NUMBERS	Standard Detail **399** Revision Date Nov, 2013

TABLE 1 - REQUIREMENTS BY ROADWAY LOCATION					
Location	ROW	Parking Requirement	Travelway Width	Sidewalk Width	Landscape Area
185th (East of Bothell Way NE)	57'	7' Both Sides	24'	9' Both Sides	None
183rd, 101st, 102nd, 103rd, 104th	50-52'	7' Both Sides	18-20'	8.5' Both Sides	None
183rd (Bothell Way NE - 101st) See Note: 7	50'	7' North Side Only	32'	8.5' Both Sides	None
183rd (West of Bothell Way NE)	52-54'	7' Both Sides	20-22'	8.5' Both Sides	None
Main St / 182nd (West of 98th)	50'	7' North Side Only, Adjacent to Library	23'	5' South Side, 9' North Side	5' South Side

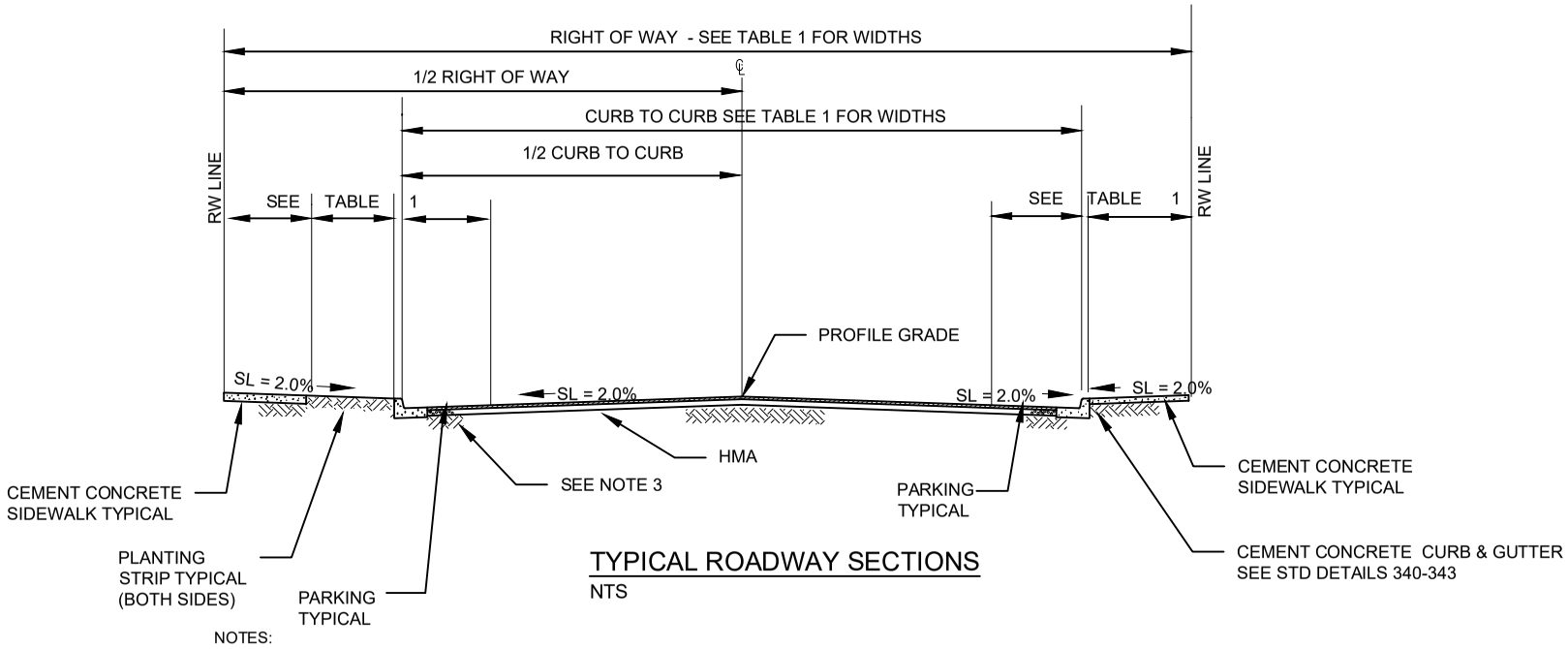

TYPICAL ROADWAY SECTIONS

NTS

NOTES:

1. PAVEMENT DEPTHS FROM STD DETAIL 310.
2. 4 INCH OF 1-1/4 INCH MINUS CRUSHED ROCK BASE COURSE PER WSDOT STANDARD SPEC 9-03.9(3).
3. SUBGRADE SHALL BE COMPACTED TO 95% DENSITY AS DETERMINED BY MODIFIED PROCTOR ASTM D 1557.
4. GRAVEL BASE MAY BE REQUIRED PENDING SOIL CONDITIONS. A SOILS REPORT PREPARED BY A REGISTERED PROFESSIONAL ENGINEER SHALL CERTIFY THAT THE ABOVE SECTION IS ACCEPTABLE.
5. ASPHALT PAVEMENT SHALL MEET WSDOT STANDARD SPEC 5-04.
6. FRANCHISE UTILITIES SHOULD BE LOCATED IN EASEMENTS OUTSIDE RIGHT-OF-WAY.
7. PLANTING STRIP DETERMINED BY ENGINEER.
8. NE 185TH ST IS INTENDED FOR TRANSIT USAGE. AS SUCH: A. PARKING SHALL BE MARKED, B. NO COMMERCIAL PARKING OR LOADING SHALL BE ALLOWED UNLESS ADEQUATE WIDTH IS PROVIDED TO MAINTAIN REQUIRED TRAVELWAY WIDTH, C. MINIMUM VERTICAL CLEARANCE OVER TRAVELWAY OF 16'-0" SHALL BE MAINTAINED.

City of Bothell™

City of Bothell

PUBLIC WORKS DEPARTMENT

Approved By:

City Engineer

TYPICAL ROADWAY SECTION DOWNTOWN

Standard Detail

D300

Revision Date

Dec, 2016

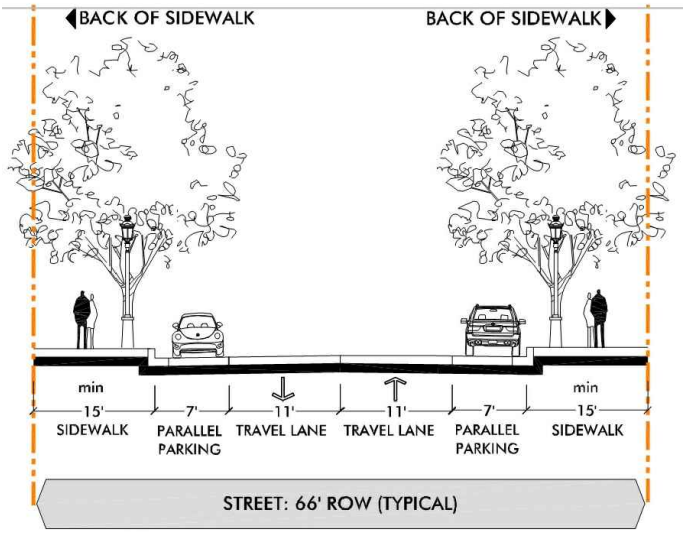

NOTES:

1. PAVEMENT DEPTHS FROM STD DETAIL 310.
2. 4 INCH OF 1-1/4 INCH MINUS CRUSHED ROCK BASE COURSE PER WSDOT STANDARD SPEC 9-03.9(3).
3. SUBGRADE SHALL BE COMPACTED TO 95% DENSITY AS DETERMINED BY MODIFIED PROCTOR ASTM D 1557.
4. GRAVEL BASE MAY BE REQUIRED PENDING SOIL CONDITIONS. A SOILS REPORT PREPARED BY A REGISTERED PROFESSIONAL ENGINEER SHALL CERTIFY THAT THE ABOVE SECTION IS ACCEPTABLE.
5. ASPHALT PAVEMENT SHALL MEET WSDOT STANDARD SPEC 5-04.
6. FRANCHISE UTILITIES SHOULD BE LOCATED IN EASEMENTS OUTSIDE RIGHT-OF-WAY.
7. MEDIAN DETAILS DETERMINED BY ENGINEER.

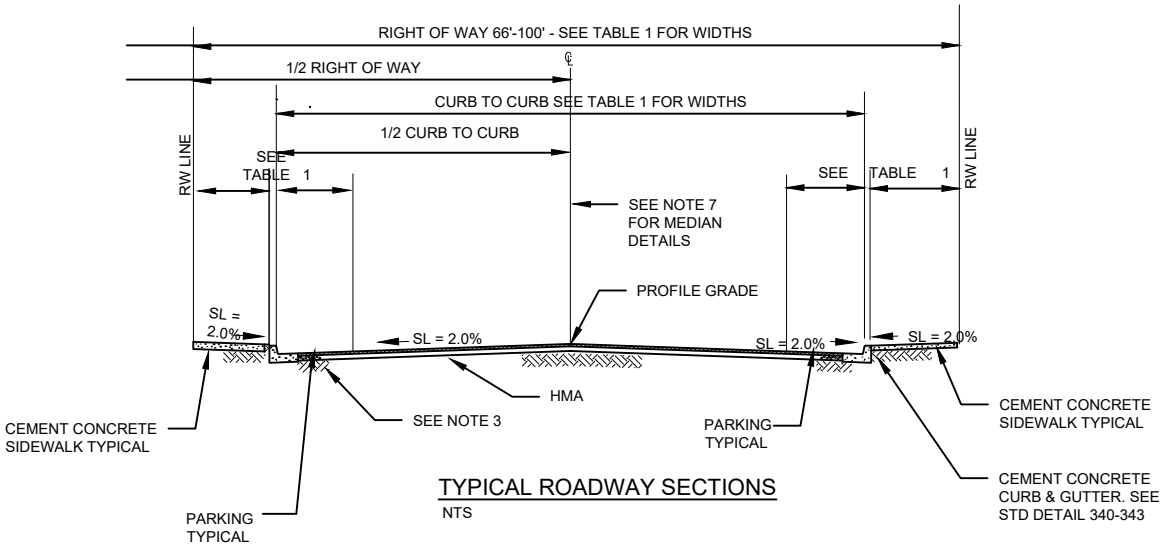

TYPICAL ROADWAY SECTIONS

NTS

TABLE 1					
ROW Width (ft)	Sidewalk Width (ft)	Parking Width (ft)	Type of Parking	Median (ft)	Travel Lane Width (ft)
66	15	7	Parallel	None	11
68	12	7	Parallel	8	11
90	15	18	Angled	None	12
100	12	7	Parallel	40	11
Note: 100' ROW with 40' park between travel lanes (Fountain: Optional)					

City of Bothell™

City of Bothell

PUBLIC WORKS DEPARTMENT

Approved By:

City Engineer

TYPICAL SECTION DOWNTOWN CITY STREET

Standard Detail

D301

Revision Date

Dec, 2016

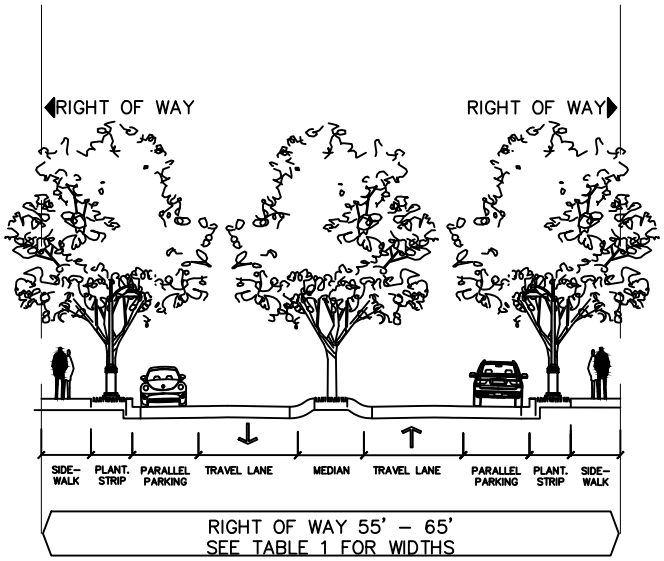

NOTES:

1. PAVEMENT DEPTHS FROM STD DETAIL 310.
2. 4 INCH OF 1-1/4 INCH MINUS CRUSHED ROCK BASE COURSE PER WSDOT STANDARD SPEC 9-03.9(3).
3. SUBGRADE SHALL BE COMPACTED TO 95% DENSITY AS DETERMINED BY MODIFIED PROCTOR ASTM D 1557.
4. GRAVEL BASE MAY BE REQUIRED PENDING SOIL CONDITIONS. A SOILS REPORT PREPARED BY A REGISTERED PROFESSIONAL ENGINEER SHALL CERTIFY THAT THE ABOVE SECTION IS ACCEPTABLE.
5. ASPHALT PAVEMENT SHALL MEET WSDOT STANDARD SPEC 5-04.
6. FRANCHISE UTILITIES SHOULD BE LOCATED IN EASEMENTS OUTSIDE RIGHT-OF-WAY.
7. MEDIAN DETAILS DETERMINED BY ENGINEER.
8. WHERE TREES ARE LOCATED IN PARKING LANES, TREES WITHIN THE PLANTING STRIPS ARE ENCOURAGED TO BE STAGGERED BETWEEN THE TREES IN PARKING LANES. (ALLOWED WITH AN APPROVED MAINTENANCE PLAN.)
9. PLANTING STRIP DETERMINED BY ENGINEER.

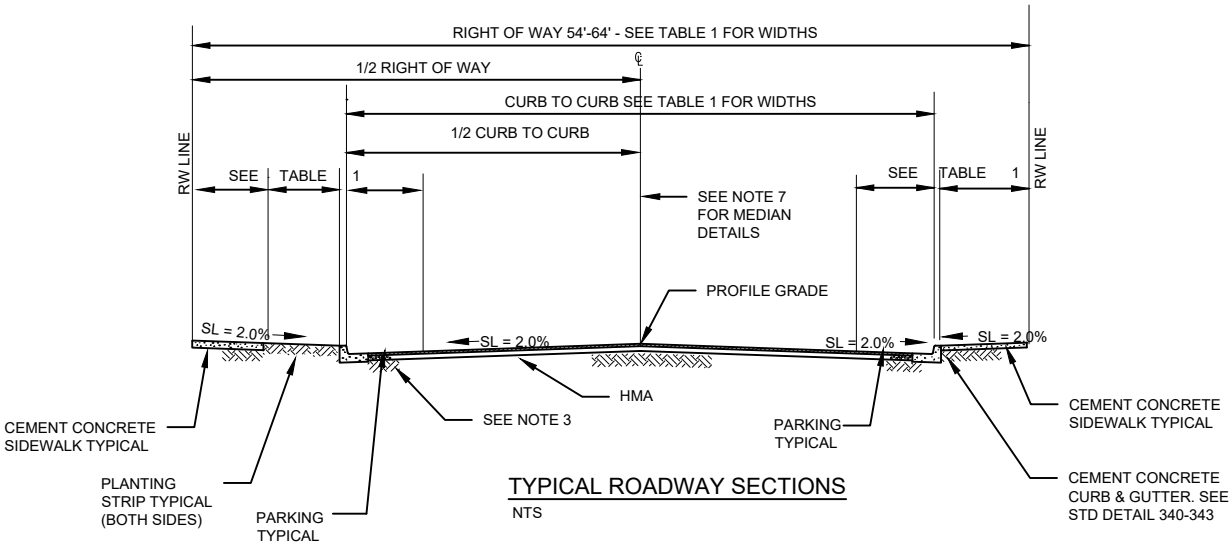

TYPICAL ROADWAY SECTIONS

NTS

TABLE 1						
ROW Width (ft)	Sidewalk Width (ft)	Plant Strip Width (ft)*	Parking Width (ft)	Type of Parking	Travel Lane Width (ft)	Median Width (ft)
55	6	5	7	Parallel	20	None
65	6	5	7	Parallel	22	8
Note: Additional option of 54' ROW see note 8						

* includes curb

City of Bothell™

City of Bothell

PUBLIC WORKS DEPARTMENT

Approved By:

City Engineer

TYPICAL SECTION DOWNTOWN NEIGHBORHOOD AVE

Standard Detail

D302

Revision Date

Dec, 2016

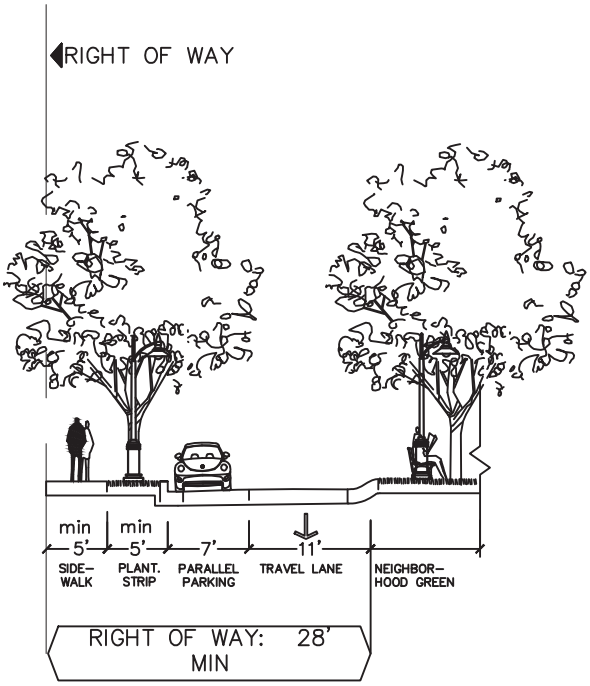

NOTES:

1. PAVEMENT DEPTHS FROM STD DETAIL 310.
2. 4 INCH OF 1-1/4 INCH MINUS CRUSHED ROCK BASE COURSE PER WSDOT STANDARD SPEC 9-03.9(3).
3. SUBGRADE SHALL BE COMPACTED TO 95% DENSITY AS DETERMINED BY MODIFIED PROCTOR ASTM D 1557.
4. GRAVEL BASE MAY BE REQUIRED PENDING SOIL CONDITIONS. A SOILS REPORT PREPARED BY A REGISTERED PROFESSIONAL ENGINEER SHALL CERTIFY THAT THE ABOVE SECTION IS ACCEPTABLE.
5. ASPHALT PAVEMENT SHALL MEET WSDOT STANDARD SPEC 5-04.
6. FRANCHISE UTILITIES SHOULD BE LOCATED IN EASEMENTS OUTSIDE RIGHT-OF-WAY.
7. SEE ENGINEER FOR DETAILS OF NEIGHBORHOOD GREEN.
8. PLANTING STRIP DETERMINED BY ENGINEER.

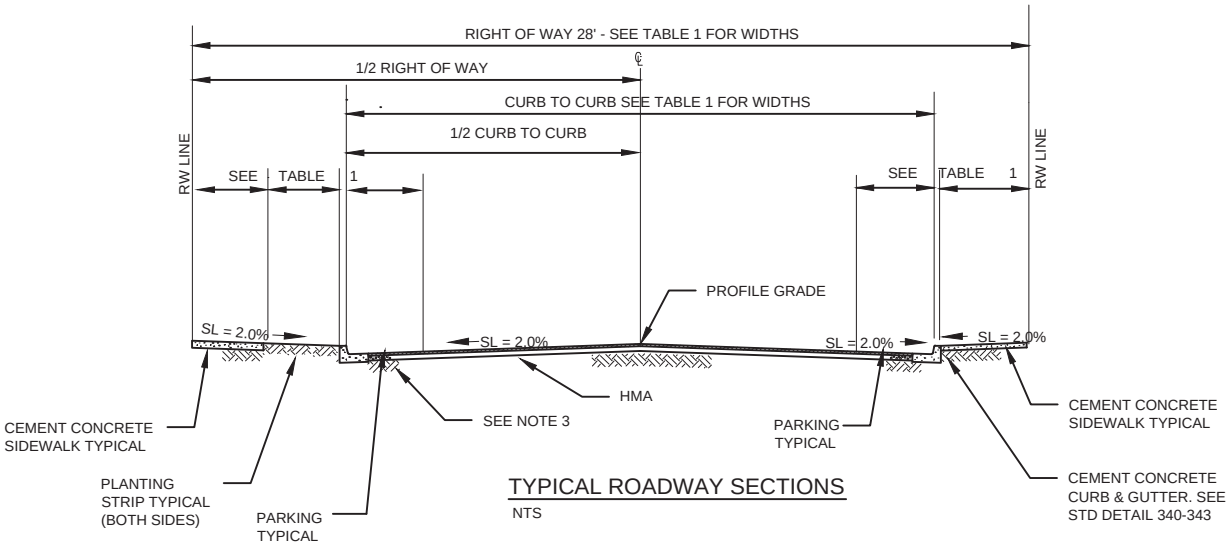

TYPICAL ROADWAY SECTIONS

NTS

TABLE 1					
ROW Width (ft)	Sidewalk Width (ft)	Planting Strip Width (ft)	Parking Width (ft)	Type of Parking	Travel Lane Width (ft)
28	5	5	7	Parallel	11 (One lane only)

City of Bothell

City of Bothell

PUBLIC WORKS DEPARTMENT

Approved By:

City Engineer

TYPICAL SECTION DOWNTOWN NEIGHBORHOOD GREEN STREET

Standard Detail

D303

Revision Date

Feb, 2012

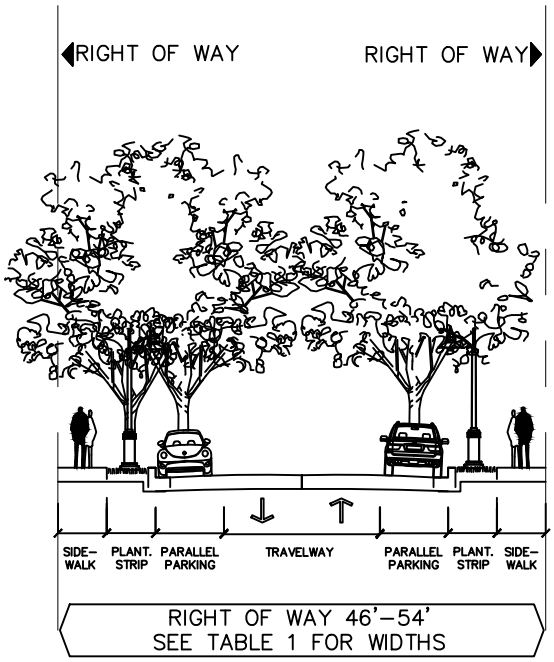

NOTES:

1. PAVEMENT DEPTHS FROM STD DETAIL 310.
2. 4 INCH OF 1-1/4 INCH MINUS CRUSHED ROCK BASE COURSE PER WSDOT STANDARD SPEC 9-03.9(3).
3. SUBGRADE SHALL BE COMPACTED TO 95% DENSITY AS DETERMINED BY MODIFIED PROCTOR ASTM D 1557.
4. GRAVEL BASE MAY BE REQUIRED PENDING SOIL CONDITIONS. A SOILS REPORT PREPARED BY A REGISTERED PROFESSIONAL ENGINEER SHALL CERTIFY THAT THE ABOVE SECTION IS ACCEPTABLE.
5. ASPHALT PAVEMENT SHALL MEET WSDOT STANDARD SPEC 5-04.
6. FRANCHISE UTILITIES SHOULD BE LOCATED IN EASEMENTS OUTSIDE RIGHT-OF-WAY.
7. WHERE TREES ARE LOCATED IN PARKING LANES, TREES WITHIN THE PLANTING STRIPS ARE ENCOURAGED TO BE STAGGERED BETWEEN THE TREES IN PARKING LANES. (ALLOWED WITH AN APPROVED MAINTENANCE PLAN.)

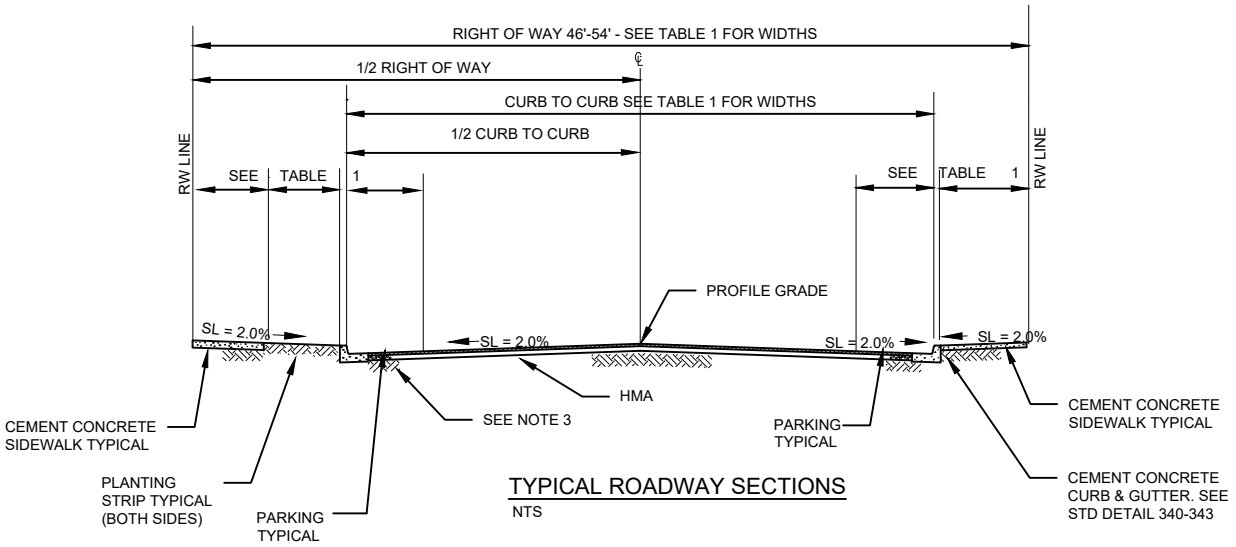

TYPICAL ROADWAY SECTIONS
NTS

TABLE 1						
ROW Width (ft)	Sidewalk Width (ft)	Planting Strip Width (ft)*	Parking Width (ft)	Type of Parking	Travel Lane Width (ft)	Median Width (ft)
46	6	5.5	7	Parallel (one side only)	16**	None
54	6	5	7	Parallel	16**	8
Note: Additional option of 54' ROW see note 8						

* includes curb width

** minimum allowed with low volume. 20' preferred.

City of Bothell™

City of Bothell

PUBLIC WORKS DEPARTMENT

Approved By:

City Engineer

TYPICAL SECTION DOWNTOWN NEIGHBORHOOD STREET

Standard Detail

D304

Revision Date

Dec, 2016

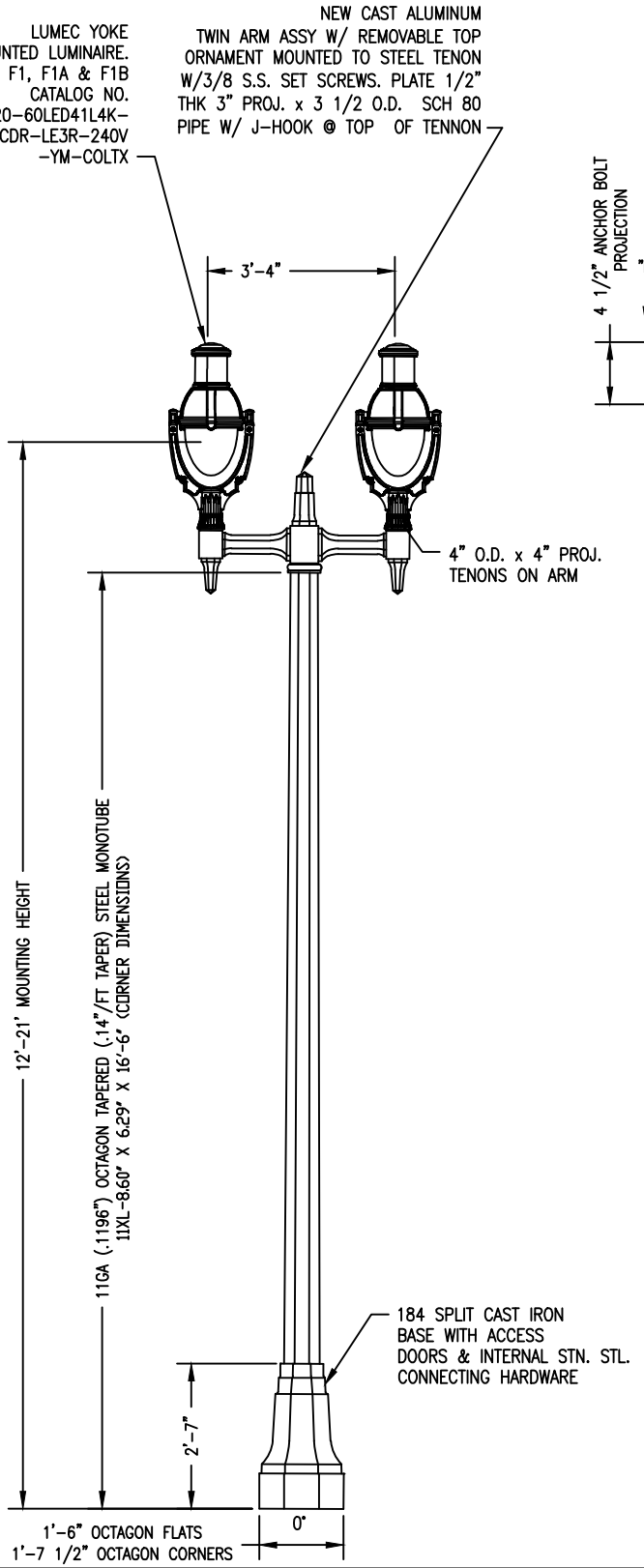

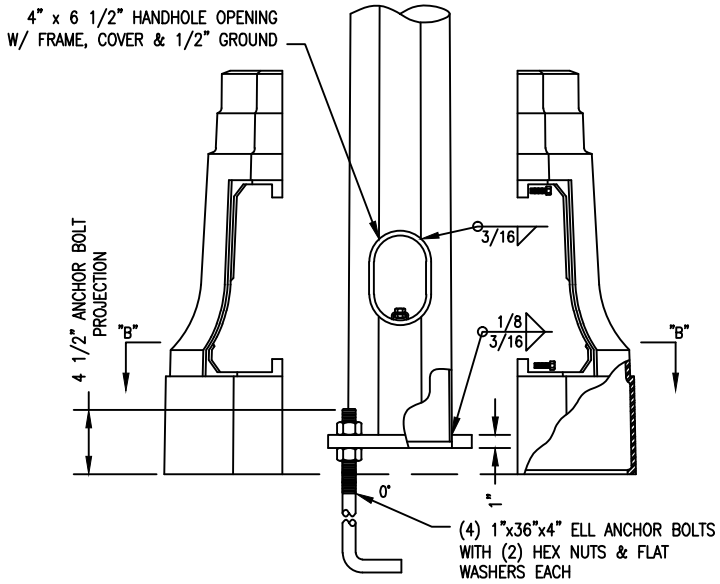

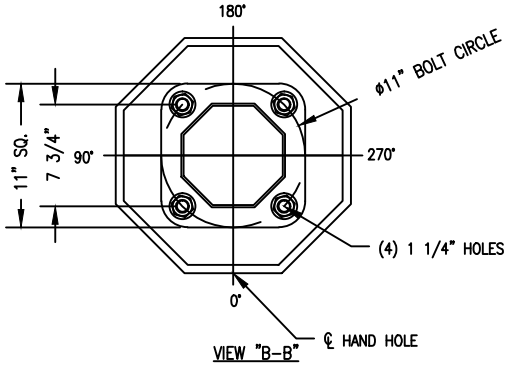

NOTE:
STRUCTURE DESIGNED IN ACCORDANCE WITH THE MOST CURRENT AASHTO STANDARD SPECIFICATIONS FOR STRUCTURAL SUPPORTS FOR HIGHWAY TRAFFIC SIGNS, LUMINAIRES & TRAFFIC SIGNALS FOR 80 MPH WIND ZONE.

City of Bothell™	**City of Bothell** **PUBLIC WORKS DEPARTMENT**	Approved By: City Engineer	TWIN-HEAD POST TOP	Standard Detail **D310** Revision Date Feb, 2012

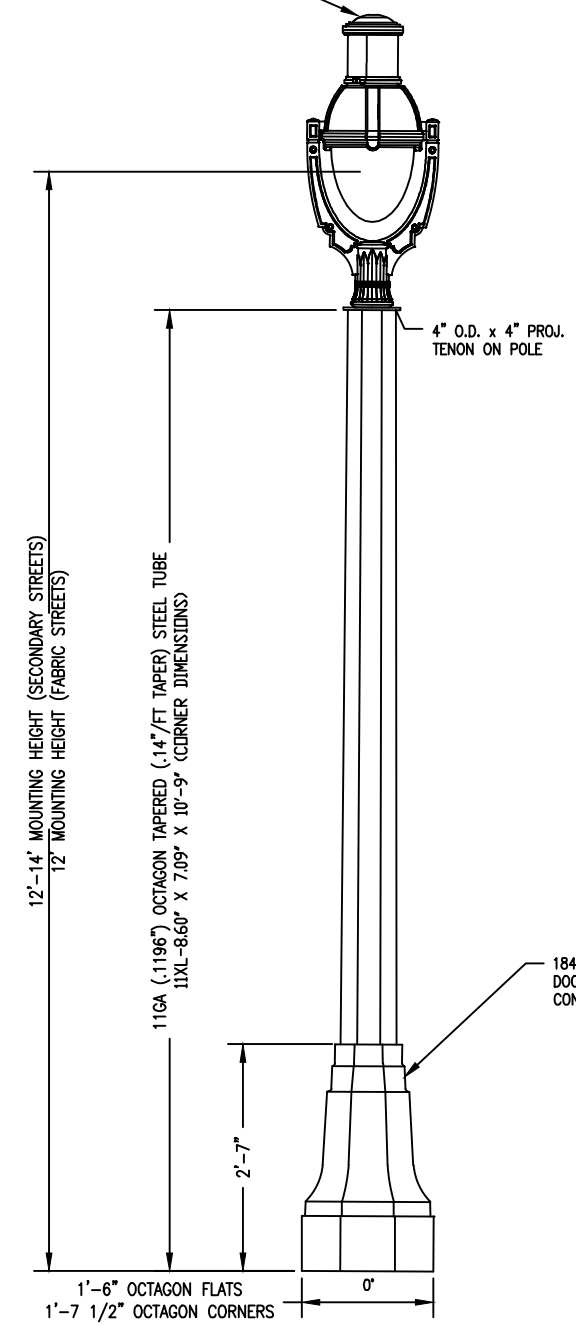

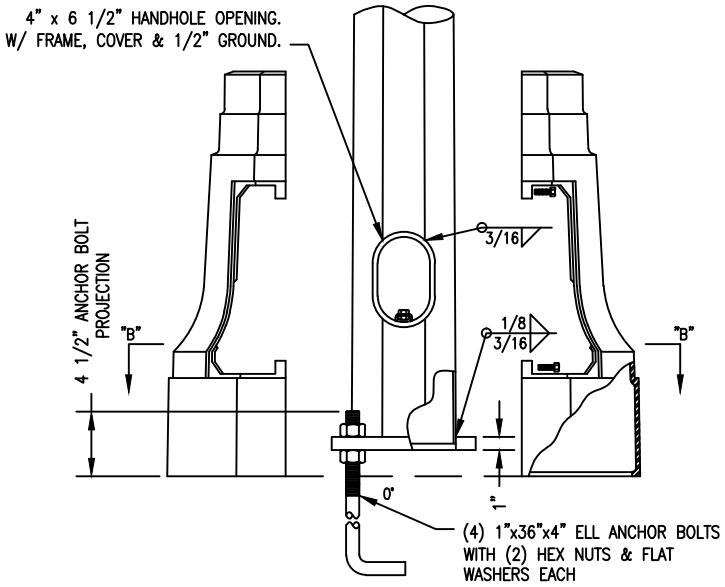

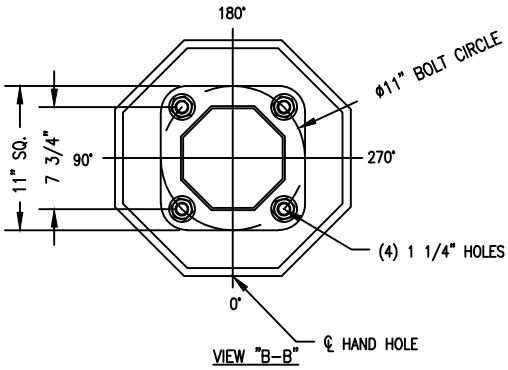

NOTE:
STRUCTURE DESIGNED IN ACCORDANCE WITH THE MOST CURRENT AASHTO STANDARD SPECIFICATIONS FOR STRUCTURAL SUPPORTS FOR HIGHWAY TRAFFIC SIGNS, LUMINAIRES & TRAFFIC SIGNALS FOR 80 MPH WIND ZONE.

City of Bothell™	**City of Bothell** **PUBLIC WORKS DEPARTMENT**	Approved By: City Engineer	SINGLE-HEAD POST TOP	Standard Detail **D311** Revision Date Nov, 2013

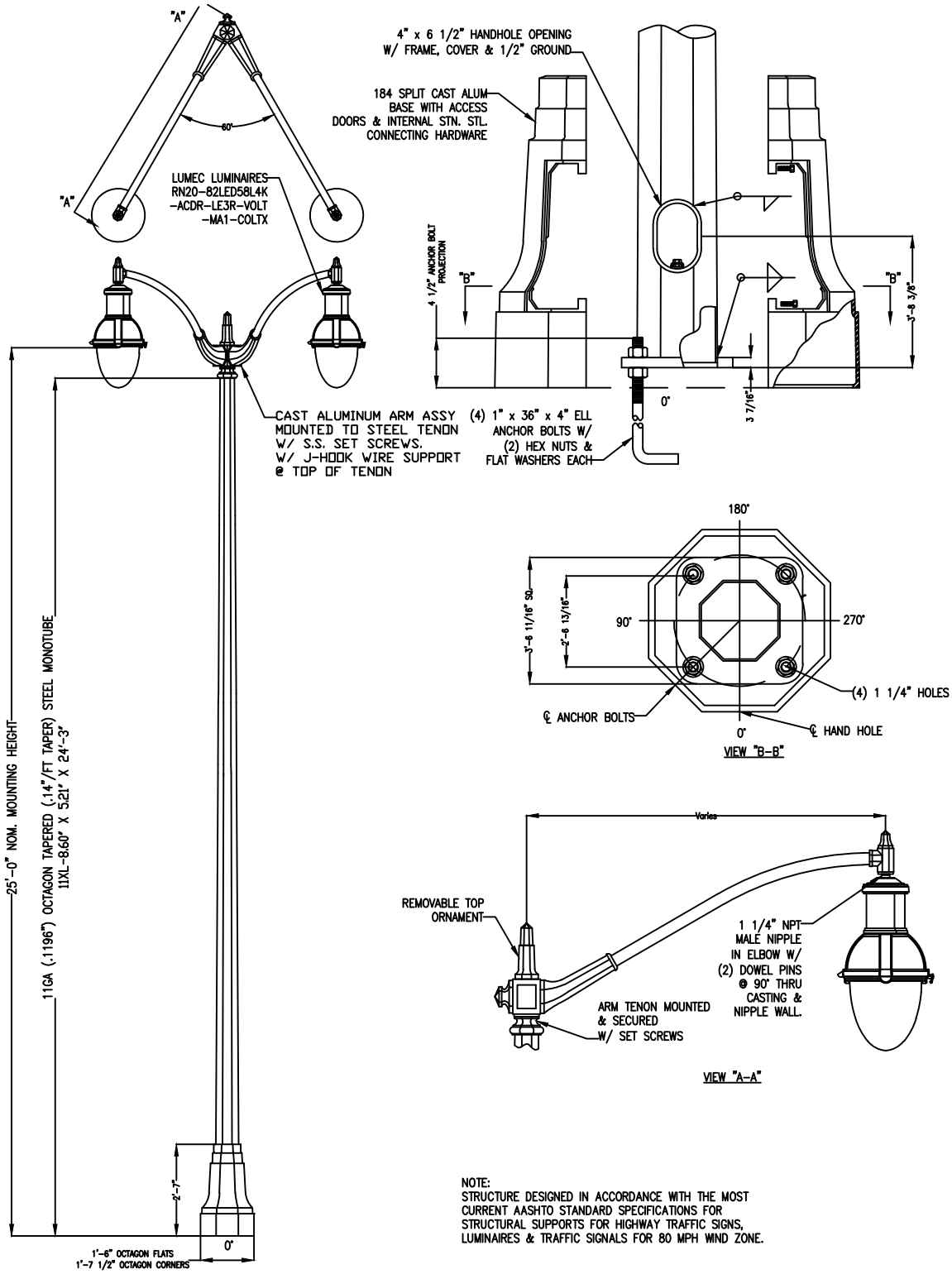

NOTE:
STRUCTURE DESIGNED IN ACCORDANCE WITH THE MOST CURRENT AASHTO STANDARD SPECIFICATIONS FOR STRUCTURAL SUPPORTS FOR HIGHWAY TRAFFIC SIGNS, LUMINAIRES & TRAFFIC SIGNALS FOR 80 MPH WIND ZONE.

City of Bothell	**City of Bothell** **PUBLIC WORKS DEPARTMENT**	Approved By: City Engineer	TWIN ARM PENDANT	Standard Detail **D312** Revision Date Feb, 2012

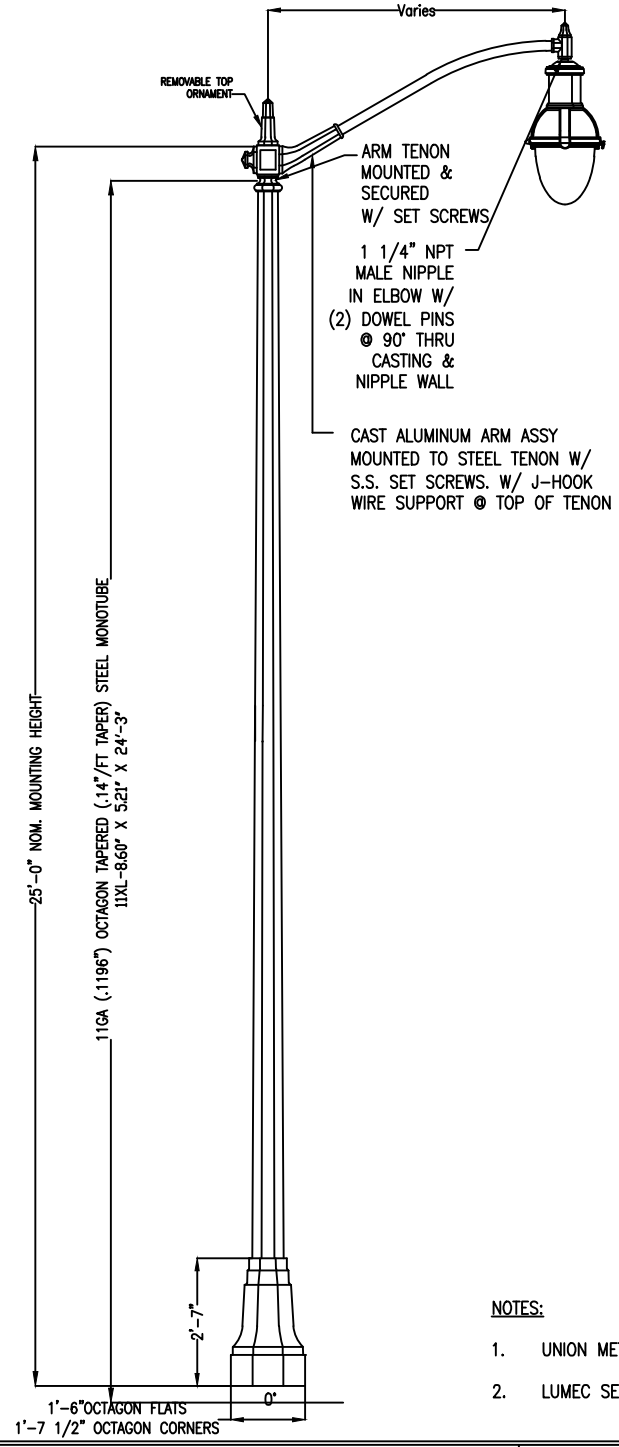

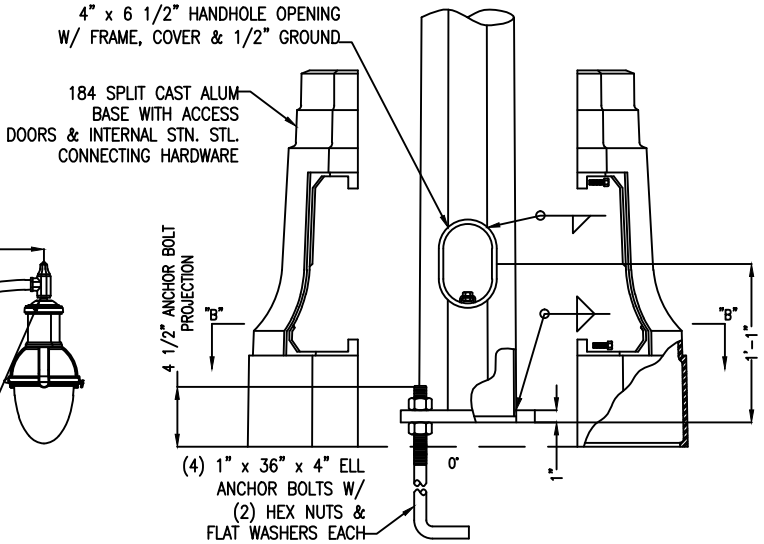

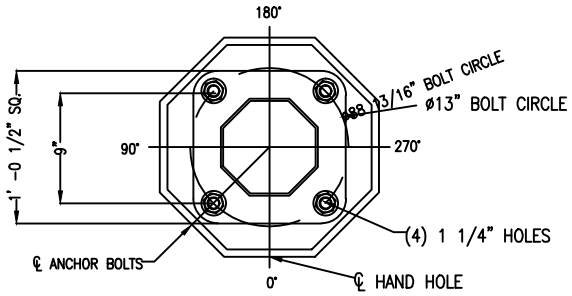

VIEW "B-B"

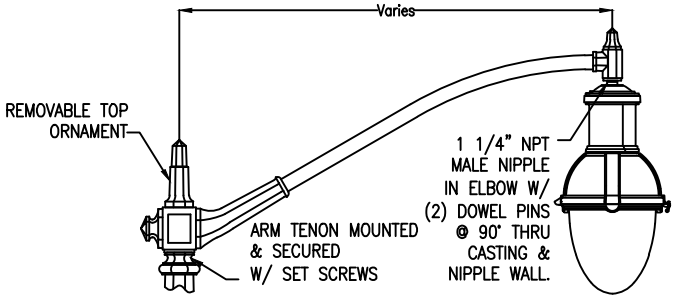

VIEW "A-A"

NOTES:

1. UNION METAL PRODUCT OR COMPARABLE FOR POLES AS APPROVED BY ENGINEER.
2. LUMEC SERIES LUMINAIRE PRODUCTS ONLY.

City of Bothell™	**City of Bothell** **PUBLIC WORKS DEPARTMENT**	Approved By: City Engineer	SINGLE ARM PENDANT	Standard Detail **D313** Revision Date Feb, 2012

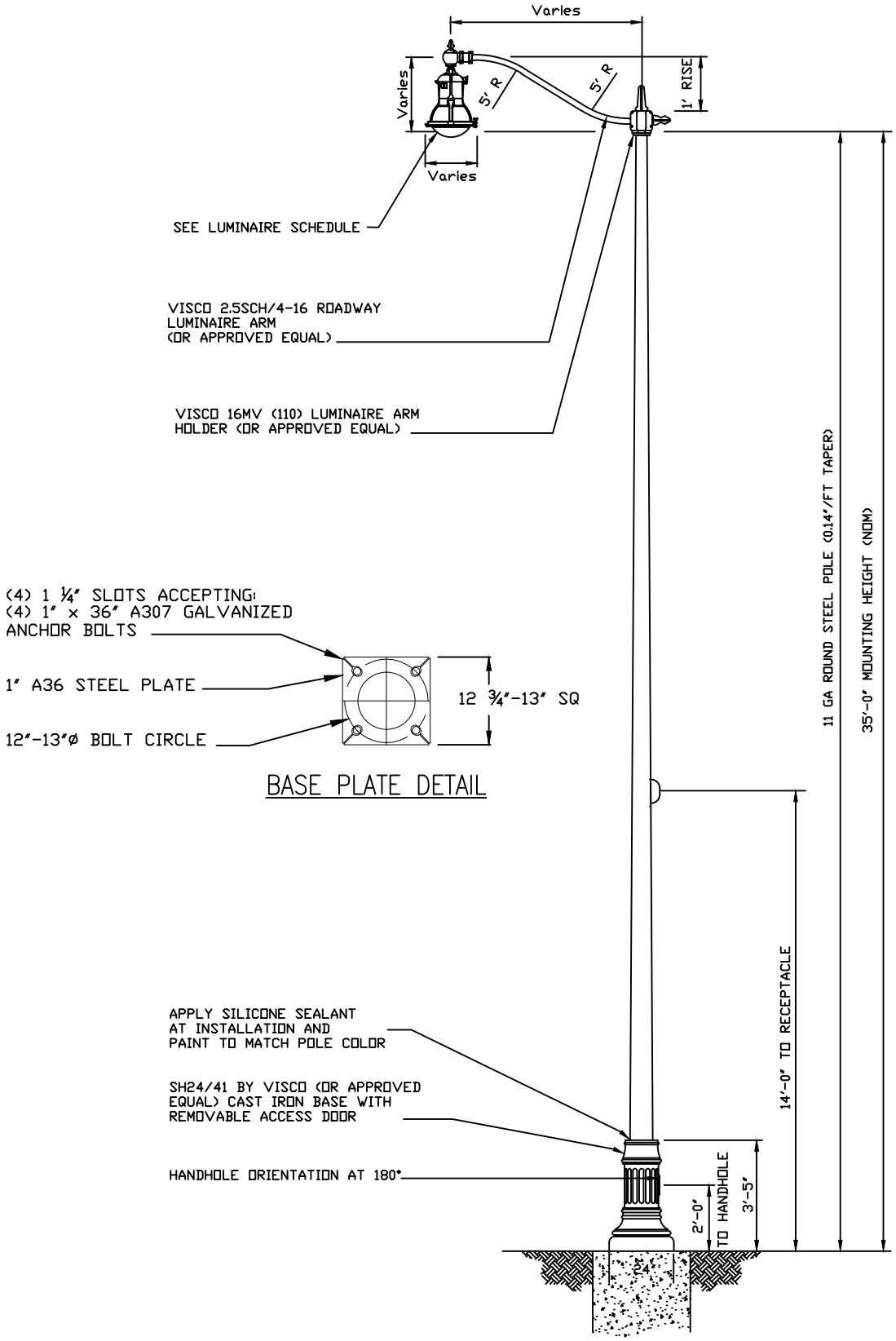

LUMINAIRE SCHEDULE

TYPE	DESCRIPTION	MANUFACTURER / CATALOG #	LAMPING / PHOTOMETRICS	POLE (SEE GENERAL NOTES)	NOTES
A	ARM-MOUNTED DOUBLE HEADED LED STREET LIGHT	LUMEC / RN20-B2LED58L4K-ACDR-LE3R-240-MAI-COLTX/COLOR PER SPEC	90 WATT, 82 WARM WHITE LED, 6300 LUMENS, 70000 HRS RATED LIFE, 4000K, 65 CRI / TYPE III DISTRIBUTION	UNION METAL - OCTAGON STEEL POLE, TAPERED 0.14"/FT	ROTATE FIXTURE HEAD OPTICS SUCH THAT PHOTOMETRIC DISTRIBUTION IS PARALLEL TO THE STREET
B	ARM MOUNTED SAG GLASS STREET LIGHT	CYCLONE CP2824-R13-LSC-250HPS-240-SC-COLOR PER SPEC	250 WATT HIGH PRESSURE SODIUM / TYPE III, MEDIUM, CUTOFF	VISCO - ROUND STEEL POLE, TAPERED 0.14"/FT	MATCH EXISTING FIXTURES FOR WAYNE CURVE PROJECT
C	YOKE-MOUNTED SINGLE HEAD LED STREET LIGHT	LUMEC / RNS20-40V30LED4K-ACDR-LE3R-240-YM-SCITX/COLOR PER SPEC	40 WATT, 30 WARM WHITE LED, 2975 LUMENS, 70000 HRS RATED LIFE, 4000K, 65 CRI / TYPE V DISTRIBUTION	UNION METAL - ROUND STEEL POLE, TAPERED 0.14"/FT	

City of Bothell™

City of Bothell

PUBLIC WORKS DEPARTMENT

Approved By:

City Engineer

VICTORIAN
SINGLE ARM
PENDANT

Standard Detail

D314

Revision Date
Feb, 2012