City of Bothell™

CITY OF BOTHELL
Wastewater Comprehensive Plan Update

G&O #16521
October 2018

Gray & Osborne, Inc.

CITY OF BOTHELL

KING/SNOHOMISH COUNTY **WASHINGTON**

City of Bothell™

WASTEWATER COMPREHENSIVE PLAN UPDATE

G&O #16521
OCTOBER 2018

Gray & Osborne, Inc.
CONSULTING ENGINEERS

TABLE OF CONTENTS

EXECUTIVE SUMMARY

CHAPTER 1 – INTRODUCTION

WASTEWATER SYSTEM OWNERSHIP AND MANAGEMENT 1-1
PURPOSE 1-1
SCOPE 1-2
BACKGROUND INFORMATION 1-3
History of Wastewater System Development 1-3
Sewer System Facility 1-3
Date of Installation 1-3
Wastewater System Ordinance 1-4
INVENTORY OF EXISTING FACILITIES 1-4
RELEVANT PLANNING DOCUMENTS 1-5
City of Bothell Documents 1-5
Other Relevant Documents 1-5
INTERLOCAL AGREEMENTS 1-5
COMPLETED CAPITAL IMPROVEMENT PROJECTS 1-5

CHAPTER 2 – BASIC PLANNING CRITERIA

INTRODUCTION 2-1
STUDY AREA 2-1
ADJACENT WASTEWATER SYSTEMS 2-1
WATER SYSTEM 2-2
Water Wells 2-2
GROWTH MANAGEMENT ACT 2-2
PLANNING PERIOD 2-2
ZONING AND LAND USE 2-2
SERVICE AREA CHARACTERISTICS 2-4
Topography 2-4
Climate 2-5
Surface Water 2-5
Geology 2-5
Soils 2-6
Critical Areas 2-6
Erosion Hazard Areas 2-7
Seismic Hazard Areas 2-7
Wetlands 2-7
Flood Hazard Areas 2-7
Slide Hazard Areas 2-7
Water Bodies 2-8
EXISTING SERVICE AREA 2-8
Industrial Wastewater 2-8
On-Site Sewage Systems 2-9

FUTURE SERVICE AREA 2-9
Population 2-10
Existing Population 2-10
Projected Population 2-11

CHAPTER 3 – REGULATORY REQUIREMENTS

INTRODUCTION 3-1
LEGISLATION, REGULATIONS, AND PERMITS 3-1
Federal Clean Water Act 3-2
Capacity, Management Operation and Maintenance 3-3
Endangered Species Act 3-4
National Environmental Policy Act 3-4
Federal Clean Air Act 3-4
State Water Pollution Control Act 3-5
State Environmental Policy Act 3-5
Growth Management Act 3-5
Shoreline Management Act Permit 3-5
Floodplain Development Permit 3-6
Hydraulic Project Approval 3-6
Local Permits 3-6
Regulatory Agencies 3-6
United States Environmental Protection Agency 3-7
National Marine Fisheries Service 3-7
United States Army Corps of Engineers 3-7
Washington State Department of Ecology 3-7
Washington State Department of Fish and Wildlife 3-8
State and Local Health Departments 3-8
City and County Planning Policies 3-8
DESIGN, CONSTRUCTION, OPERATION, AND MAINTENANCE 3-9
STANDARDS 3-9
Pretreatment Requirements 3-9
Gravity System 3-10
Lift Stations 3-10
On-Site Systems 3-11
RECLAIMED WATER STANDARDS 3-11
Brightwater Wastewater Treatment Facility 3-11
Permitted Uses of Reclaimed Municipal Wastewater 3-12
Groundwater Recharge and Streamflow Augmentation 3-13
Other Uses 3-14
Reuse Area Requirements 3-14
Potential for Irrigation Water Reuse 3-14
Potential for Industrial Water Reuse 3-15
Flushing of Sanitary Sewer Lines 3-15
Reclaimed Water Conclusion 3-15

CHAPTER 4 – SYSTEM DESIGN CRITERIA

INTRODUCTION 4-1
DEFINITION OF TERMS 4-1
Wastewater 4-1
Domestic Wastewater 4-1
Infiltration 4-2
Inflow 4-2
Average Dry Weather Flow (ADWF) 4-2
Peak Domestic Flow 4-2
Maximum Winter Month Flow 4-2
Peak Wet Weather Flow (PWWF) 4-3
WASTEWATER FLOW DESIGN CRITERIA 4-3
Average Domestic Flow 4-3
Wastewater Equivalent Residential Unit (ERU) 4-5
Domestic Flow Peaking Factor 4-5
Infiltration and Inflow 4-6
SUMMARY OF WASTEWATER FLOW DESIGN CRITERIA 4-9

CHAPTER 5 – EXISTING FACILITIES

INTRODUCTION 5-1
Regional Sewer System 5-1
EXISTING WASTEWATER COLLECTION SYSTEM 5-1
Drainage Basins 5-1
Sewage Lift Stations 5-1
Lift Station 1 5-1
Lift Station 2 5-2
Lift Station 3 5-2
Lift Station 4 5-2
Odor Control 5-2
Force Mains 5-4
Gravity Lines 5-4
Telemetry and Control 5-5
SCADA System 5-5
Decant Facility 5-6
SEWER AGREEMENTS 5-6
King County Agreement 5-6

CHAPTER 6 – COLLECTION SYSTEM EVALUATION

HYDRAULIC MODEL 6-1
MODEL ELEMENTS 6-1
Flow Data 6-2
Population 6-3
Infiltration and Inflow 6-5
HYDRAULIC MODELING ANALYSIS 6-6
Year 2017 through 2036 Flows 6-6

Buildout Flows 6-6
SEWAGE LIFT STATION CAPACITY EVALUATION 6-9
FORCE MAIN AND SIPHON CAPACITY EVALUATION 6-9
CAPACITY EVALUATION SUMMARY 6-10
COLLECTION SYSTEM CONDITIONS ASSESSMENT 6-10

CHAPTER 7 – OPERATION AND MAINTENANCE PROGRAM

INTRODUCTION 7-1
WASTEWATER SYSTEM ORGANIZATION 7-1
Operator Certification 7-1
SYSTEM OPERATION AND CONTROL 7-2
SCADA System 7-2
Monitoring Capabilities 7-2
Alarms 7-2
PREVENTATIVE MAINTENANCE PROGRAM 7-3
SCADA System 7-3
Lift Stations 7-3
Force Mains/Siphons 7-3
Gravity Sewer and Manholes 7-3
Fats, Oils and Grease Program 7-4
EMERGENCY RESPONSE PROGRAM 7-4
Emergency Procedures 7-4
Wastewater System Emergency Contact List 7-4
Power Failure 7-5
Severe Earthquake 7-5
SAFETY PROCEDURES 7-6
CUSTOMER COMPLAINT RESPONSE 7-6
SEWER SYSTEM STAFFING REQUIREMENTS 7-7
Existing Program 7-8
City-Owned Facilities 7-8
Private Facilities 7-8
Maintenance Planning Criteria 7-9
Staffing Levels 7-9

CHAPTER 8 – CAPITAL IMPROVEMENT PLAN

INTRODUCTION 8-1
PROPOSED SYSTEM IMPROVEMENTS 8-1
Gravity System Improvements 8-2
GV-1: 100th Avenue NE 10-Inch Gravity Sewer Replacement (2019) .. 8-2
GV-2: NE 190th Street, NE 189th Place, NE 187th Street, 88th Avenue NE, and 89th Avenue NE Gravity Sewer Installation (2022) 8-2
GV-3: Beardslee Place, Sunrise Drive and Valley View Street 8-Inch Gravity Sewer Installation (2021) 8-3
GV-4: NE 196th Street and SR 527 10-Inch Gravity Sewer Replacement (2019) 8-3

GV-5: NE 186th Street and 98th Avenue NE Gravity 10-Inch Gravity Sewer Replacement and Waynita Drive 12-Inch Gravity Sewer Replacement (2018) ... 8-3
GV-6: SR 522 18-Inch Gravity Sewer Replacement (2021) ... 8-3
GV-7: Manhole Grade Adjustments (Overlay Program) and Small Works Improvements (2019-2038) ... 8-4
GV-8: Annual I/I Improvements (2019-2038) ... 8-4
GV-9: Canyon Creek 8-Inch Bypass Sewer and 126th Avenue 10-Inch Gravity Sewer Replacement (2023) ... 8-4
GV-10: NE 175th Street 21-Inch Gravity Sewer Replacement (2022) ... 8-4
GV-11: NE 101st Place NE 8-Inch Gravity Sewer Replacement (2019) ... 8-5
GV-12: 96th Avenue NE 8-Inch Gravity Sewer Main Replacement (2019) ... 8-5
GV-13: 94th Avenue NE 8-Inch Gravity Sewer Replacement (2019) ... 8-5
GV-14: East Riverside Drive 8-Inch Gravity Sewer Replacement (2023) ... 8-5
GV-15: Lift Station 4 Abandonment (2019) ... 8-6
GV-16: Downtown Revitalization NE 185th Street Reconstruction (2019) ... 8-6
General System Capital Improvements ... 8-6
G-1: Infiltration and Inflow Studies (2019-2038) ... 8-6
G-2: Wastewater Comprehensive Plan (2024) ... 8-6
G-3: Fats, Oils, and Grease (FOG) Study (2019) ... 8-7
Lift Station Capital Improvements ... 8-7
LS-1: Lift Station 1 Improvements (2020) ... 8-7
DEVELOPER EXTENSION PROJECTS ... 8-7
CAPITAL IMPROVEMENTS PLAN SCHEDULE ... 8-8

CHAPTER 9 – FINANCIAL PROGRAM

INTRODUCTION ... 9-1
EXISTING SERVICE RATES AND CHARGES ... 9-1
Sewer Rates ... 9-1
System Development Charge ... 9-2
FINANCIAL ANALYSIS ... 9-3

LIST OF TABLES

No.	Table	Page
E-1	Study Area Population Projections	E-2
E-2	Summary of Wastewater Design Criteria	E-3
E-3	6-year Capital Improvement Plan Summary	E-4
E-4	Existing Sewer Base Rate (City Ordinance Nos. 2235 and 2248)	E-5
E-5	Existing System Development Charge (City Ordinance No. 1370)	E-5
1-1	Wastewater System History	1-3
1-2	Historical Growth of Sewer Service Connections	1-4
1-3	Completed Capital Improvement Projects	1-6
2-1	Zoning	2-3
2-2	Industrial Wastewater Permit Holders	2-9
2-3	Historical Growth of Sewer Service Connections	2-10
2-4	Study Area Population Projections	2-11
3-1	Existing Wastewater Regulations	3-1
3-2	Setback Distances for Class A Reclaimed Water in the State of Washington	3-14
4-1	Winter Water Use	4-4
4-2	King County Wet Weather Flow Monitoring Results	4-8
4-3	Reconfigured Basin I/I Rates	4-9
4-4	Summary of Wastewater Design Criteria	4-10
5-1	Inventory of Sewage Lift Stations	5-3
5-2	Inventory of Force Mains	5-4
5-3	Inventory of Lift Station Force Mains and Siphons	5-4
5-4	Inventory of Gravity Lines	5-5
5-5	Vactor Decant and Solids Drying Facility	5-6
5-6	KCDNR Interceptor Connections	5-7
6-1	Collection System Information	6-2
6-2	Projected Population by Basin	6-4
6-3	Projected Infiltration and Inflow by Basin	6-5
6-4	Sewer Model Results	6-7
6-5	Lift Station Capacity Evaluation Summary	6-9
6-6	Sewer Collection System Improvements	6-10
7-1	Emergency Phone List	7-5
7-2	Emergency Response Procedures for an Earthquake	7-6
7-3	Publicly-Owned Wastewater Infrastructure	7-8
7-4	Inspection and Maintenance Planning Criteria	7-9
7-5	Estimated Staffing Levels	7-10
8-1	Capital Improvement Project Summary	8-9
8-2	6-Year Capital Improvement Project Schedule	8-10
9-1	Existing Sewer Base Rate (City Ordinance Nos. 2235 and 2248)	9-2
9-2	2018 System Development Charge (City Resolution No. 1370)	9-2
9-3	Projected Revenues and Expenses: 2018 – 2024	9-5

LIST OF FIGURES

No.	Figure	On or Follows Page
1-1	Location Map	1-2
1-2	Aerial Map	1-2
2-1	City Limits, UGA and Study Area Boundaries	2-2
2-2	Sewer Service Area Boundaries	2-2
2-3	Water System	2-2
2-4	Zoning	2-4
2-5	Topography	2-6
2-6	Drainage Basins	2-6
2-7	Critical Areas	2-8
2-8	Floodplains and Wetlands	2-8
3-1	Brightwater Reclaimed Water Service Areas	3-12
4-1	DOH Diurnal Curve	4-6
4-2	Reconfigured KCDNR Mini Basins	4-6
5-1	Regional Sewers	5-2
5-2	Sewer Basins	5-2
5-3	Sewer System Schematic	5-2
5-4	Collection System	5-4
6-1	Modeled Sewer System	6-4
6-2	Modeled Deficiencies	6-6
7-1	Public Works Department Organizational Chart	7-2

APPENDICES

Appendix A – Wastewater Agreements
Appendix B – SEPA Checklist
Appendix C – Design Standards
Appendix D – Sewer Overflow Response Plan
Appendix E – Modeling Data and Results
Appendix F – Capital Improvement Program Detailed Cost Estimates
Appendix G – Rate and GFC Ordinances
Appendix H – Funding Source Alternatives
Appendix I – Reclaimed Water Feasibility Study

EXECUTIVE SUMMARY

The City of Bothell Wastewater Comprehensive Plan (the Plan) provides a long-term planning strategy for the City's sewer utility over the 6- and 20-year planning periods. The Plan has been prepared consistent with Department of Ecology requirements as specified in the Washington Administrative Code (WAC) Chapter 173-240-050. The Plan represents a commitment by the City to pursue and implement the Plan's recommendations and capital improvements.

PLAN SUMMARY

Chapters 1 and 2 of the Plan provide background data, including a description of the service area, service area policies, and population projections. Chapter 3 presents applicable wastewater regulatory requirements. Chapter 4 characterizes the existing and projected wastewater flows, including infiltration and inflow. Chapter 5 provides background information about the City's existing facilities, including lift stations, force mains, and gravity systems. Chapter 6 is an evaluation of the collection system, including a description of the City's hydraulic model, and an evaluation of the treatment agreement, major gravity lines, lift stations, and force mains for existing and future flows. Chapter 7 presents a brief summary of the City's operation and maintenance program. Chapter 8 presents the recommended capital improvements, and Chapter 9 presents financing for the recommended improvements. The nine chapters of the Plan are followed by appendices that contain backup documentation.

STUDY AREA

The study area for the Plan covers approximately 3,750 acres, which is primarily defined by the area within the City limits south of the King County/Snohomish County boundary. Area within the City limits north of the King County/Snohomish County is served by Alderwood Water and Wastewater District (AWWD), with the exception of approximately 92 acres that is served by the City. Other areas along the western and southern edges of the City limits within King County are served by Northshore Utility District (Northshore), when Northshore is the logical service provider for gravity sewer service. The City's collection system also provides transmission for approximately 75 acres that is served by Woodinville Water District (WWD). The City's UGA Boundary, City Limits, and the Study Area Boundary are presented in Figure 2-1.

POPULATION PROJECTIONS

The City has developed 20-year population projections for the City based on future land use and historical growth rates. The City's projected population for 2036 within the incorporated King County portion of the City, and the study area, is 27,121 for residential population, and 15,198 for employee population. Employee population includes the

student, staff, and faculty population of the University of Washington Cascadia Campus. Growth has been extrapolated from 2015 to 2036 to represent population projects for the 20-year planning period based on the Washington State Office of Financial Management *2015 Population Trends* and 2035 population and employment targets from City of Bothell's *2015 Imagine Bothell Comprehensive Plan.*

The study area includes one high school, three public elementary schools, two private elementary schools, and one private high school. The estimated student population of these schools for the 2015-2016 school year is approximately 5,000. The City residential population growth rate is applied to the existing school population to estimate future school populations.

TABLE E-1

Study Area Population Projections

Year	Service Area Residential Population	Service Area Employee Population(4)	Service Area School Population(5)
2010	17,928(1)	11,625	4,805
2015	21,933(2)	12,011	5,000
2016	22,155(3)	12,146	5,051
2017	22,381(3)	12,283	5,102
2018	22,608(3)	12,422	5,154
2019	22,838(3)	12,562	5,206
2020	23,070(3)	12,703	5,259
2021	23,304(3)	12,846	5,313
2022	23,541(3)	12,991	5,367
2029	25,268(3)	14,052	5,760
2030	25,525(3)	14,210	5,819
2031	25,784(3)	14,370	5,878
2032	26,046(3)	14,532	5,938
2033	26,311(3)	14,696	5,998
2036	27,121(3)	15,198	6,183
Buildout	**36,055**	**20,801**	**8,206**

(1) Estimated from 2010 Census data.
(2) Estimated from the Washington State Office of Financial Management *2015 Population Trends.*
(3) Interpolated from 2010 Census data and 2035 information from the *2015 Imagine Bothell Comprehensive Plan*.
(4) Employee population includes student, staff, and faculty populations at the UW/Cascadia Campus.
(5) School populations estimated based on actual enrollment for 2015-2016 plus populations for area private schools from Washington State Office of Superintendent of Public Instruction. School populations are projected at the same rate as residential population.

WASTEWATER CHARACTERIZATION

Table E-2 presents the wastewater flow design criteria used for the Plan. This includes the projected domestic flow, infiltration and inflow, and total peak wet weather flows for the study area. Existing infiltration and inflow is based on the findings of the King County Department of Natural Resources *2001/2002 Wet Weather Flow Monitoring* Report.

TABLE E-2

Summary of Wastewater Design Criteria

Design Criteria	2016	2022	2036	Buildout(1)
Residential Population	22,155	23,541	27,121	36,055
Per Capita Domestic Flow (gpcd)	50	50	50	50
Residential Domestic Flow (gpd)	1,107,774	1,177,060	1,356,053	1,802,746
Employee Population(2)	12,146	12,991	15,198	20,801
Per Capita Employee Flow (gpcd)	30	30	30	30
Employee Domestic Flow (gpd)	364,391	389,738	455,952	624,037
Student Population	5,051	5,367	6,183	8,206
Per Capita Student Flow (gpcd)	16	16	16	16
Student Domestic Flow (gpd)	80,813	85,868	98,925	131,299
Total Average Domestic Flow (gpd)	1,552,978	1,652,666	1,910,930	2,558,082
Domestic Peaking Factor(3)	1.74	1.74	1.74	1.74
Peak Domestic Flow (gpd)	2,702,182	2,875,640	3,325,018	4,451,062
Sewered Area (acres)(4)	2,363	2,538	2,947	3,765
Infiltration and Inflow (gpad)	1,301	1,301	1,301	1,301
Infiltration and Inflow (gpd)	3,074,263	3,302,263	3,834,264	4,898,265
Peak Wet Weather Flow (gpd)(5)	5,776,445	6,177,903	7,159,282	9,349,327

(1) Buildout population assumed to occur in 2064 based on rate of 1.0 percent for residential population and 1.1 percent for employee population.
(2) Employee Population includes student population for the University of Washington Bothell Campus (UW/Cascadia).
(3) A domestic peaking factor of 1.74 was used per Figure 4-1.
(4) Developed based on a GIS analysis of the area currently served with sewers and projected to the entire study area by buildout.
(5) Peak Wet Weather Flow is the sum of Peak Domestic Flow and Infiltration and Inflow.

OPERATION AND MAINTENANCE

The City owns and operates a collection system that includes over 69 miles of gravity main, four lift stations, and over 1,900 linear feet of force main. The City's sewer is treated by King County Department of Natural Resources (KCDNR). Operational duties of City staff include maintaining lift stations, cleaning gravity mains, responding to

system emergencies, and responding to customer issues. The City currently has 4.8 full-time employees operating and maintaining the sewer system, and estimates that 0.20 additional FTE will be required to achieve its maintenance program goals.

CAPITAL IMPROVEMENT PROGRAM

The Plan contains a list of projects for the City's capital improvement plan for the 6-year planning horizon. These projects include lift station upgrades and gravity main improvements for increasing capacity and reducing infiltration and inflow. The City may reprioritize projects in the future to accommodate other agencies, unforeseen events, and budget constraints. Table E-3 summarizes the City's estimated annual capital improvement costs for the 6-year planning horizon. A map showing the locations of the proposed projects is included in the back sleeve of the Plan, and individual project cost estimates are included in Appendix F.

TABLE E-3

6-year Capital Improvement Plan Summary

Year	Annual Capital Improvement Cost(1)
2018-2019	$2,761,000
2020	$1,089,000
2021	$2,279,000
2022	$1,504,000
2023	$1,396,000
2024	$550,000

(1) Project Costs are in 2018 dollars. Construction Cost Index = 5932 (ENR, February 2018).

FINANCIAL

Table E-4 illustrates the City's monthly base and volume charges for sewer service. Table E-5 illustrates the City's sewer system development charges. The charge is imposed on new customers requesting sewer service.

TABLE E-4

Existing Sewer Base Rate (City Ordinance Nos. 2235 and 2248)

Year 2018 Rates		
Inside City Limits	**Bimonthly Base Rate**	**Volume Rate(1)**
Single-Family Residential	$120.10 per dwelling unit	$3.98 per CCF
Senior Low Income Residential(3)	$90.08 per dwelling unit	$2.99 per CCF
Multi-Family Residential	$157.91 per dwelling unit	$10.12 per CCF
Schools	$157.91(2) per school	$10.12 per CCF per building
Commercial	$157.91 per occupancy	$10.12 per CCF
Outside City Limits	**Bimonthly Base Rate(1)**	**Volume Rate(4)**
Single-Family Residential	$150.13 per dwelling unit	$4.98 per CCF
Senior Low Income Residential	$112.60 per dwelling unit	$0
Multi-Family Residential	$197.38 per dwelling unit	$12.65 per CCF
Schools	$197.38 per school	$12.65 per CCF per building
Commercial	$197.38 per occupancy	$12.65 per CCF

(1) The volume rate is charged per 100 cubic feet of excess.
(2) During months when school is not in session for the entire month, the bimonthly charge is $304.51 per school.
(3) Calculated by applying a 25 percent discount to Single-Family Residential rates.
(4) Calculated by applying a 25 percent surcharge to rates inside city limits per City Ordinance No. 2105, passed in 2012.

TABLE E-5

Existing System Development Charge (City Ordinance No. 1370)

Customer Classification	**Unit**	**Sewer Main Connection Charge**
Single-Family Residential	dwelling unit	$2,941.00
Multi-Family Residential	per ERU	$2,941.00
Commercial	per ERU	$2,941.00
School	per ERU	$2,941.00
All Other	per ERU	$2,941.00

The sewer utility is currently in good financial health, with enough revenue to cover KCDNR treatment charges, City operating expenses, and system improvement projects with modest rate increases. The City does not have particularly large reserves, but is operating with a positive net cash flow.

CHAPTER 1

INTRODUCTION

The Wastewater Comprehensive Plan (the Plan) is an update of the 2006 City of Bothell *Sanitary Sewer System Plan*. The Plan is prepared to conform to the requirements of the Revised Code of Washington (RCW) 90.48 and the Washington Administrative Code (WAC) 173-240-050.

WASTEWATER SYSTEM OWNERSHIP AND MANAGEMENT

The City of Bothell owns and operates a municipal wastewater collection system that primarily serves the King County portion of the incorporated City of Bothell. Other portions of incorporated Bothell are served by the Alderwood Water and Wastewater District (AWWD), Northshore Utility District (Northshore), and Woodinville Water District (WWD).

The City of Bothell is a council-managed, first-class City, governed by seven elected City council members. The City's current mailing address is:

City of Bothell
18415 101st Avenue NE
Bothell, WA 98011

Figure 1-1 provides a vicinity and location map for the City of Bothell. Figure 1-2 provides an aerial map for the City of Bothell.

PURPOSE

The Plan has been developed to address the existing and future wastewater service issues facing the City of Bothell (City). The City has experienced rapid growth over the last 15 years and it is expected to continue in the future. As a result, the need to assess the existing sewer system facilities and to establish an effective plan for the future is critical to properly managing the City's expansion of sewer services.

The purpose of this Plan is to address known issues, assess the condition and capabilities of the existing sewer system, develop a plan for future service within the defined study area, and to determine required system improvements, including project construction schedules and costs.

SCOPE

This Wastewater Comprehensive Plan is organized into the following chapters:

- Chapter 1, **Introduction**, includes descriptions of the purpose and scope of the Plan and background information to address the issues discussed in this Plan.

- Chapter 2, **Basic Planning Criteria**, reviews general planning issues, including study area boundaries, physical environment, growth management, land use zoning, and population projections.

- Chapter 3, **Regulatory Requirements**, consists of pertinent regulations that apply to the City's wastewater collection and pumping facilities.

- Chapter 4, **System Design Criteria**, includes key terms for the discussion of wastewater flows and development of design criteria for existing and future flows.

- Chapter 5, **Existing Facilities**, presents a description of the wastewater collection system as well as sewer agreements with adjacent utilities.

- Chapter 6, **Collection System Evaluation,** describes a computer model of the sewer collection system components, including lift stations, force mains, and major gravity lines; and evaluates the future service system of the study area and provides recommendations for the plan that will best meet the City's future needs. The chapter also provides modeling results at current and future flows to identify system capacity needs.

- Chapter 7, **Operation and Maintenance,** provides an overview of the City's operation and maintenance program including the City's operational scheme and describes the maintenance program, including recording keeping, and preventative maintenance procedures.

- Chapter 8, **Capital Improvement Plan,** recommends sewer system improvement and provides an implementation schedule for those improvements.

- Chapter 9, **Financial Program**, provides an assessment of current financial status of the utility, discusses available and potential revenue sources for system improvements, reviews the General Facilities Charge, develops cost for additional staff, and reviews Operations and

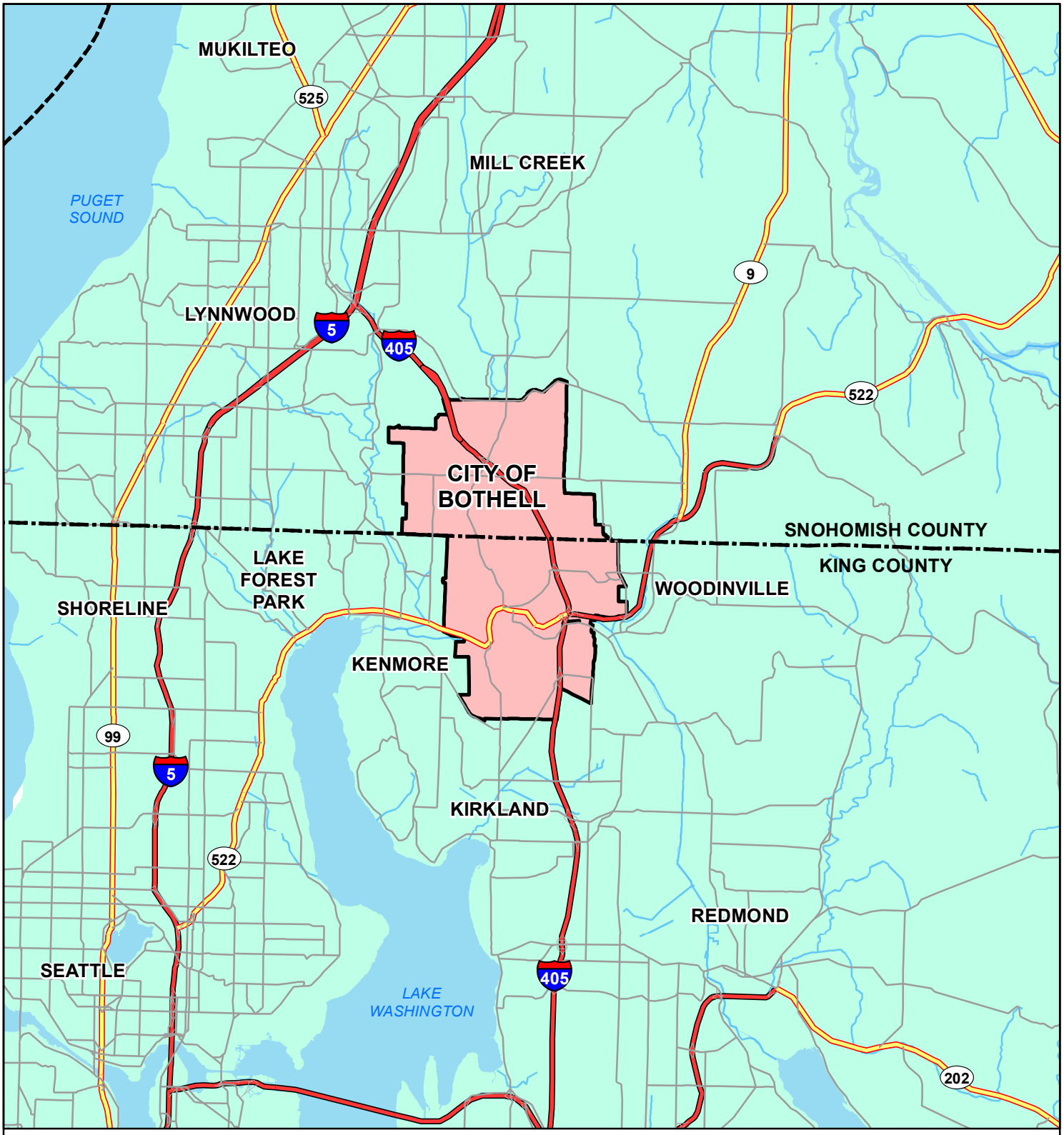

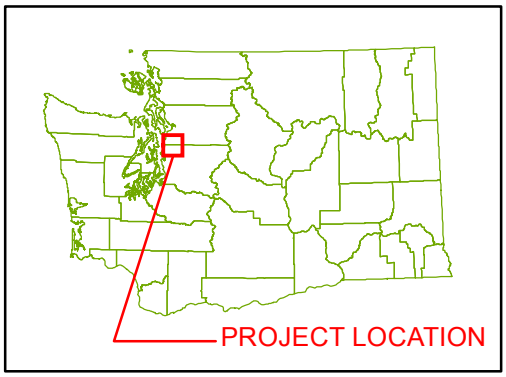

N

0 6,000 12,000 Feet

CITY OF BOTHELL

WASTEWATER COMPREHENSIVE PLAN
FIGURE 1-1

LOCATION MAP

Gray & Osborne, Inc.
CONSULTING ENGINEERS

\L:\Bothell\16521 Sewer Comprehensive Plan\GIS\VICINITY.mxd

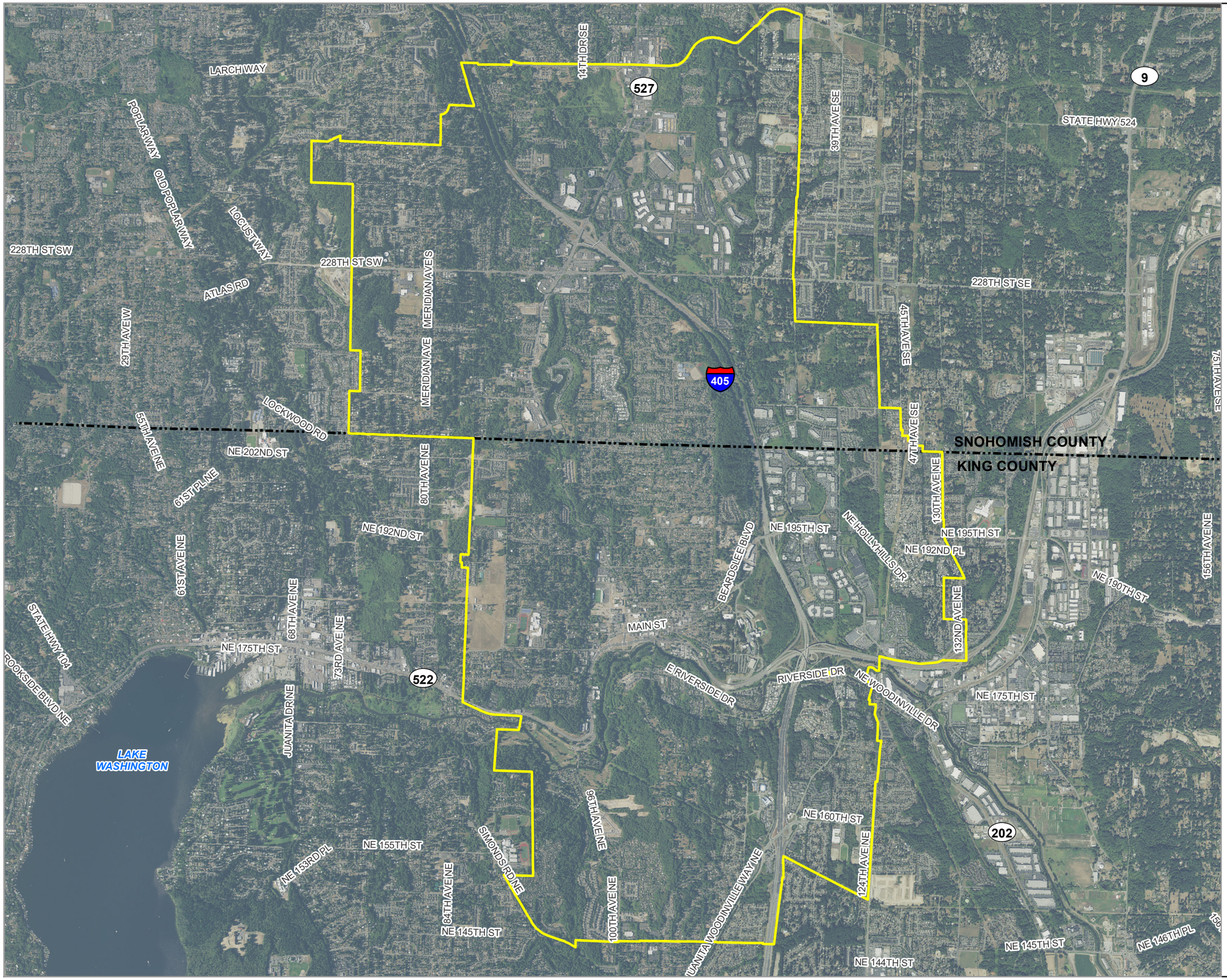

N

0 1,500 3,000 6,000 Feet

LEGEND:

CITY LIMITS

DATA SOURCE: CITY OF BOTHELL,
KING COUNTY GIS DATA,
SNOHOMISH COUNTY GIS DATA,
AEX AERIALS MAPS & DATA

CITY OF BOTHELL

WASTEWATER COMPREHENSIVE PLAN
FIGURE 1-2

AERIAL MAP

Gray & Osborne, Inc.
CONSULTING ENGINEERS

L:\Bothell\16521 Sewer Comprehensive Plan\GIS\AERIAL.mxd

Maintenance (O&M) costs related to the recommended Capital Improvement Program (CIP).

BACKGROUND INFORMATION

HISTORY OF WASTEWATER SYSTEM DEVELOPMENT

The majority of the information that is provided in this section is taken from previously completed planning documents.

The initial City sewer collection system was first constructed in 1960 through the development of a Utility Local Improvement District (ULID). Table 1-1 provides a list of sewer collection system facilities with their associated dates of installation.

TABLE 1-1

Wastewater System History

Sewer System Facility	Date of Installation
Bothell ULID formed	1958
Initial sewer collection system constructed	1960
City enters into agreement with METRO (now called King County Department of Natural Resources) for sewage treatment	1961
Lift Station 1 (Site 42)(1)	1990
Lift Station 2 (Site 43)(2)	1983
Lift Station 3 (Site 44)(3)	1980
Lift Station 4 (Site 45)	1984

(1) Upgraded in 2008.
(2) Upgraded in 2014.
(3) Upgraded in 2016.

Table 1-2 presents the City's historical sewer service connections for the past 5 years. Based on this historical growth, the City has averaged approximately 1.7 percent growth annually.

TABLE 1-2

Historical Growth of Sewer Service Connections

Year	Connections Per Year	Total Connections	Annual Growth (%)(1)
2012	--	5,123	N/A
2013	93	5,216	1.8
2014	166	5,382	3.2
2015	33	5,415	0.6
2016	69	5,487	1.3
Average Annual Growth			**1.7**

(1) Annual growth in sewer connections from previous year.

WASTEWATER SYSTEM ORDINANCES

The City has adopted the following relevant ordinances as part of the Bothell Municipal Code (BMC), Section 18.03 Sanitary Sewers:

- 18.03.110 Additions, betterments, extensions – Compliance with sewer comprehensive plan.
- 18.03.120 Additions, betterments, extensions – Financing.
- 18.03.130 Additions, betterments, extensions – Procedure.
- 18.03.140 Additions, betterments, extensions – Construction.
- 18.03.150 Additions, betterments, extensions – Maintenance.
- 18.03.180 Additions, betterments, extensions – Reimbursement contracts.
- 18.03.190 Additions, betterments, extensions – Oversizing.
- 18.03.195 Sewer system – Prohibited.
- 18.03.300 Rates, charges, classifications.
- 18.03.310 Sewer main connection charge.
- 18.03.320 Sewer system facility charges.
- 18.03.550 Adherence to METRO (King County Department of Natural Resources) standards applicable to wastes discharged.

INVENTORY OF EXISTING FACILITIES

The City does not own wastewater treatment facilities. All wastewater collected within the City is conveyed to the King County Department of Natural Resources (KCDNR) wastewater treatment facilities. The City's collection system includes four lift stations, approximately 1,900 linear feet of force main, and approximately 69 miles of gravity lines. An inventory and schematics of these facilities are included in Chapter 5, including a discussion of the sewer agreements the City maintains with KCDNR, Northshore, Alderwood Water and Wastewater District (AWWD), and Woodinville Water District (WWD).

RELEVANT PLANNING DOCUMENTS

The following planning documents were prepared either for the City or for adjacent wastewater purveyors.

CITY OF BOTHELL DOCUMENTS

- *City of Bothell Water System Comprehensive Plan*, Gray & Osborne, Inc., 2012.
- *Imagine...Bothell, City of Bothell Comprehensive Plan,* Updated 2015.
- *City of Bothell Sewer Comprehensive Plan, Gray & Osborne,* Inc., November 2006.

OTHER RELEVANT DOCUMENTS

- *King County, 2001/2002 Wet Weather Flow Monitoring*, June 2002.
- *Alderwood Water and Wastewater District Sanitary Sewer Comprehensive Plan,* September 2017.
- *Northshore Utility District, Wastewater Comprehensive Plan,* March 2009.
- *Northshore Utility District, Wastewater System Plan Amendment Totem Lake Capacity Analysis and Improvements,* December 2016.
- *Woodinville Water District, General Sewer Plan,* July 2007.
- *King County Department of Natural Resources, Updated Planning Assumptions for Wastewater Flow Forecasting*, July 2014

INTERLOCAL AGREEMENTS

The City maintains an agreement with King County that provides for the treatment and disposal of wastewater generated within the City. The City also maintains agreements with Northshore, WWD, and AWWD that provide for the collection of all wastewater generated within the City. A copy of each agreement is included in Appendix A and a further discussion is included in Chapter 5.

COMPLETED CAPITAL IMPROVEMENT PROJECTS

The capital improvement plan in the *City of Bothell Sewer Comprehensive Plan* prepared in 2006 by Gray & Osborne, Inc. recommended various improvements to the wastewater collection system for the City. Table 1-3 lists projects completed by the City since 2006.

TABLE 1-3

Completed Capital Improvement Projects

Year Completed	Project Description
2016	Beardslee Boulevard 8-Inch Gravity Sewer Replacement
2008	Lift Station 1 Improvements
2014	Lift Station 2 Improvements
2017	Lift Station 3 Improvements

CHAPTER 2

BASIC PLANNING CRITERIA

INTRODUCTION

The configuration of a sewer system can be influenced by many factors including development trends, political considerations, and topography. Sewer lines should follow natural drainage patterns to maximize gravity flow. A comprehensive sewer plan establishes a sewer service area based on topography, the drainage characteristics of the area, and the sewer provider's growth objectives. Modifications may then be made in consideration of the influence of existing facilities, political boundaries, and growth patterns before finalizing a specific plan. A comprehensive sewer plan must permit sufficient flexibility to provide for existing areas of need and the future development of areas in the planning basin.

STUDY AREA

The study area for the Plan covers approximately 3,750 acres, which is primarily defined by the area within the City limits south of the King County/Snohomish County boundary. Area within the City limits north of the King County/Snohomish County is served by Alderwood Water and Wastewater District (AWWD), with the exception of approximately 92 acres that is served by the City. Other areas along the western and southern edges of the City limits within King County are served by Northshore Utility District (Northshore), when Northshore is the logical service provider for gravity sewer service. The City's UGA Boundary, City Limits, and the Study Area Boundary are presented in Figure 2-1.

ADJACENT WASTEWATER SYSTEMS

The City's sewer service area is bordered to the north by AWWD, to the west and south by Northshore, and to the east by Woodinville Water District (WWD). Figure 2-2 illustrates the City of Bothell sewer service area and the boundaries of the adjacent sewer providers. The City sewer service area boundary differs slightly from the study area. The sewer service area boundary is based on the franchise boundaries for each of the sewer providers in the area. The City has agreements with the adjacent purveyors in some areas to serve customers within other purveyor's boundaries, and to allow adjacent purveyors to serve within the City. These agreements are generally in place to allow the area in question to be served by gravity by the appropriate sewer service provider.

WATER SYSTEM

The City owns and operates a water distribution and storage system. Water is supplied by Seattle Public Utilities (SPU) at three master meter locations, and by agreement with Northshore Utility District. The City operates and maintains four storage reservoirs with a total capacity of 7million gallons, four booster stations, and over 115 miles of piping. Figure 2-3 shows the location of water transmission facilities, storage reservoirs, booster stations, and Group B and Group D water wells.

There are no existing or proposed wastewater treatment facilities within the study area and the nearest existing wastewater facility is located approximately four miles from the study area limits.

WATER WELLS

The City has two groundwater wells at the Penn Park Reservoir site. These were used as the primary water supply until the 1960s, when the City began using SPU supply. The City has groundwater claims allowing up to 750 gpm instantons supply, although realistic supply capacity of these wells is about 350 gpm.

There are 9 Group D wells within the sewer service area and 2 Group B wells within the sewer service area. These are shown on Figure 2-3.

GROWTH MANAGEMENT ACT

The Growth Management Act (GMA) was enacted in 1990 to address the population growth that occurred in Washington State during the 1980s. To ensure a continuation of Washington's high quality of life, officials across the state have addressed growth management within various levels of government. The basic objective of the GMA is to encourage county and city governments to develop and implement a 20-year comprehensive plan that incorporates their vision of the future, within the framework of the broader needs of the state.

Under GMA, municipalities must coordinate their planning efforts with those of the county. The planning effort of a municipality includes the establishment of an Urban Growth Area (UGA). Generally, municipalities are to provide basic urban services, including water, sewer, education, police, and fire protection to all areas within their established UGAs.

PLANNING PERIOD

Due to the City's growth history and the need to provide sewer services for future growth, the City's wastewater system is in need of continuous evaluation and improvement. A

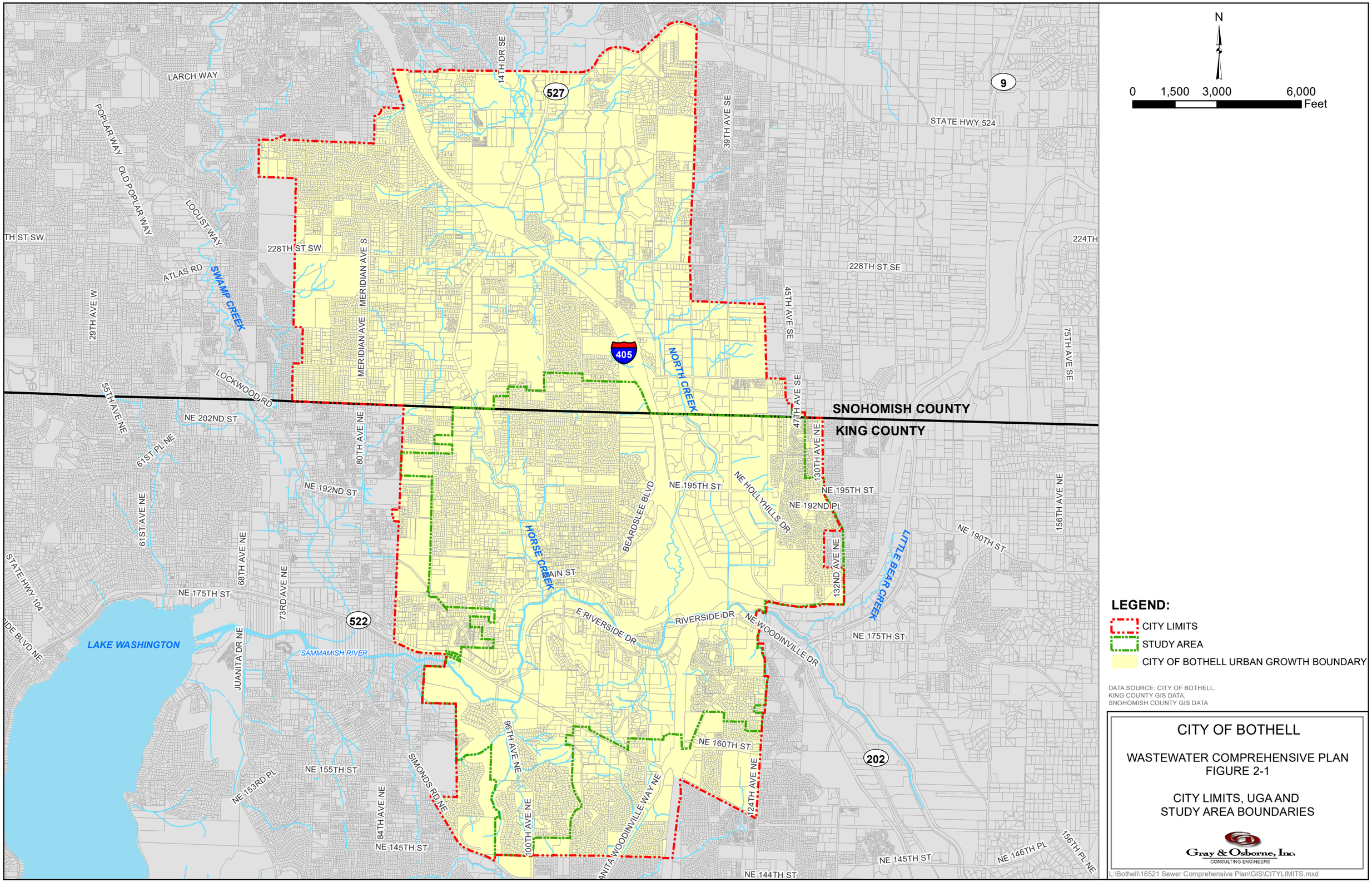
N
0 1,500 3,000 6,000
Feet
LARCH WAY
POPLAR WAY
OLD POPLAR WAY
LOCUST WAY
ATLAS RD
SWAMP CREEK
29TH AVE W
LOCKWOOD RD
55TH AVE NE
NE 202ND ST
61ST PL NE
61ST AVE NE
NE 192ND ST
STATE HWY 104
68TH AVE NE
NE 175TH ST
73RD AVE NE
JUANITA DR NE
LAKE WASHINGTON
SAMMAMISH RIVER
NE 153RD PL
NE 155TH ST
84TH AVE NE
NE 145TH ST
SIMONDS RD NE
80TH AVE NE
228TH ST SW
MERIDIAN AVE S
MERIDIAN AVE
14TH DR SE
527
405
522
9
202
39TH AVE SE
STATE HWY 524
228TH ST SE
45TH AVE SE
47TH AVE SE
NORTH CREEK
SNOHOMISH COUNTY
KING COUNTY
130TH AVE NE
NE 195TH ST
NE HOLLYHILLS DR
NE 192ND PL
BEARDSLEE BLVD
HORSE CREEK
MAIN ST
E RIVERSIDE DR
RIVERSIDE DR
NE WOODINVILLE DR
LITTLE BEAR CREEK
132ND AVE NE
NE 190TH ST
NE 175TH ST
75TH AVE SE
156TH AVE NE
224TH
96TH AVE NE
100TH AVE NE
NE 160TH ST
124TH AVE NE
JUANITA WOODINVILLE WAY NE
NE 144TH ST
NE 146TH PL
156TH PL NE
LEGEND:
CITY LIMITS
STUDY AREA
CITY OF BOTHELL URBAN GROWTH BOUNDARY
DATA SOURCE: CITY OF BOTHELL,
KING COUNTY GIS DATA,
SNOHOMISH COUNTY GIS DATA
CITY OF BOTHELL
WASTEWATER COMPREHENSIVE PLAN
FIGURE 2-1
CITY LIMITS, UGA AND
STUDY AREA BOUNDARIES
Gray & Osborne, Inc.
CONSULTING ENGINEERS
L:\Bothell\16521 Sewer Comprehensive Plan\GIS\CITYLIMITS.mxd

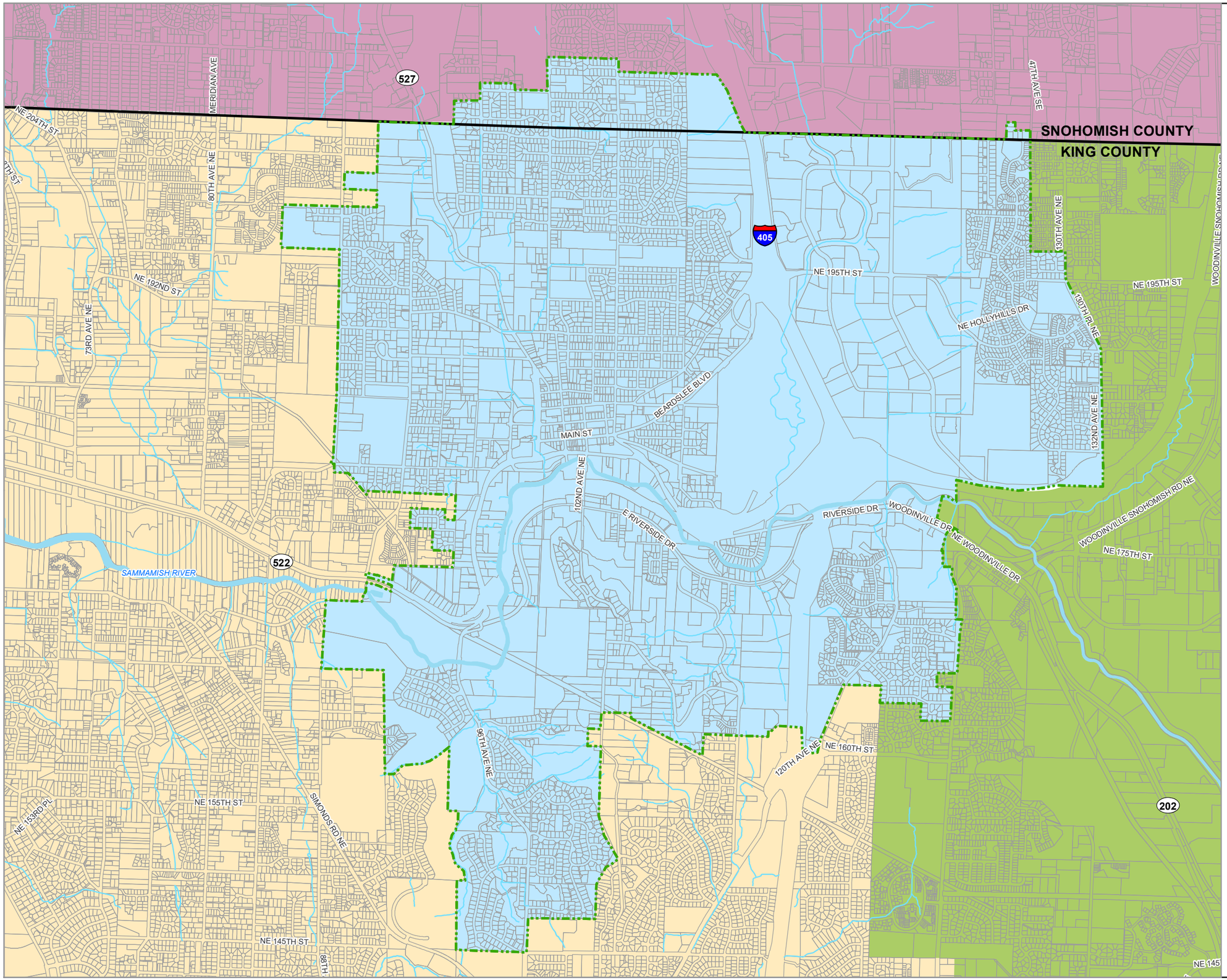

N

0 1,000 2,000 4,000 Feet

LEGEND:

- RIVERS/STREAMS
- STUDY AREA
- ALDERWOOD WATER & WASTEWATER DISTRICT
- NORTHSHORE UTILITY DISTRICT
- WOODINVILLE WATER DISTRICT

DATA SOURCE: CITY OF BOTHELL,
KING COUNTY GIS DATA,
SNOHOMISH COUNTY GIS DATA

CITY OF BOTHELL

WASTEWATER COMPREHENSIVE PLAN
FIGURE 2-2

SEWER SERVICE AREA BOUNDARIES

Gray & Osborne, Inc.
CONSULTING ENGINEERS

L:\Bothell\16521 Sewer Comprehensive Plan\GIS\SEWERSERVICEAREA.mxd

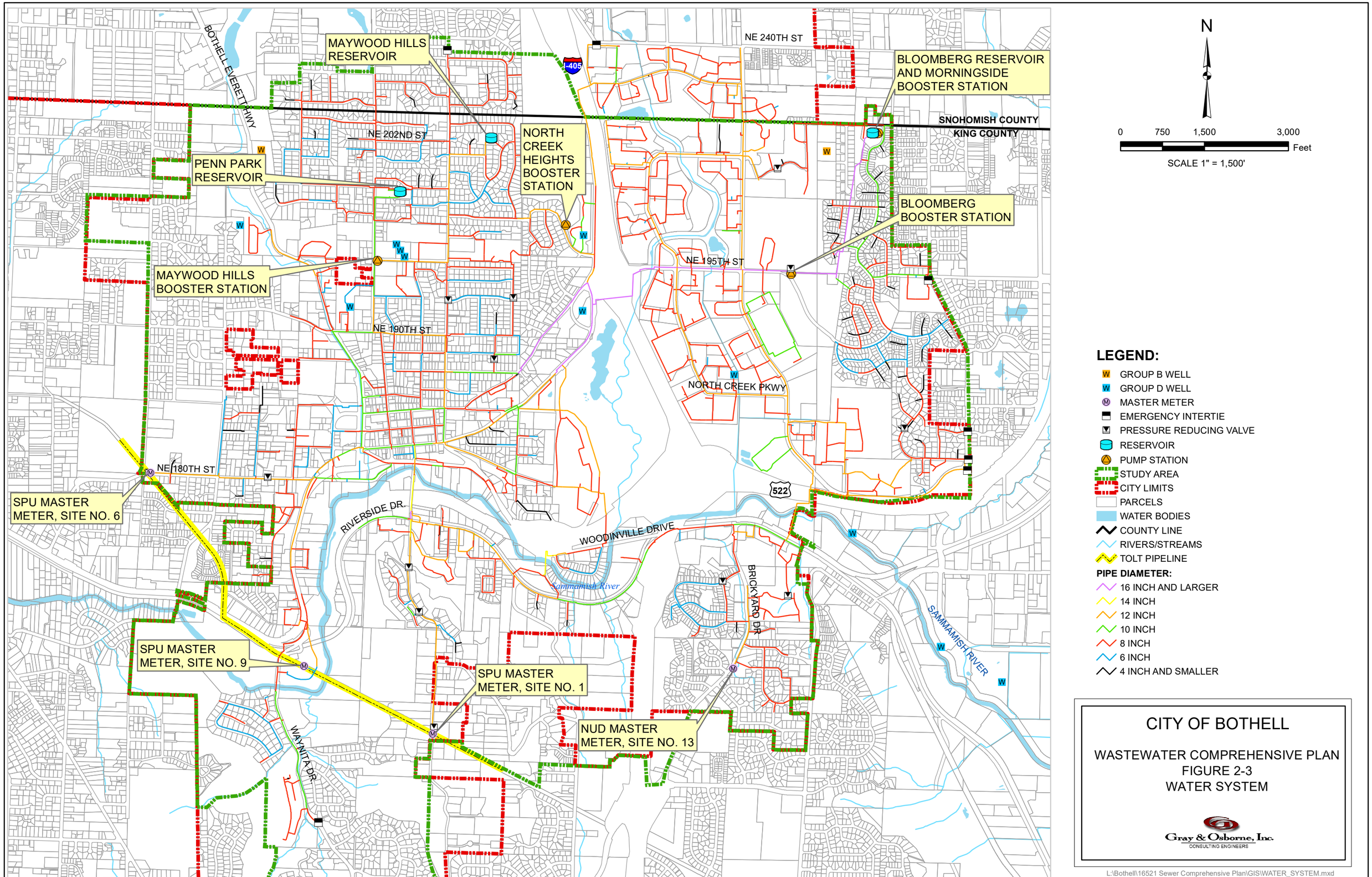
MAYWOOD HILLS RESERVOIR
BLOOMBERG RESERVOIR AND MORNINGSIDE BOOSTER STATION
NORTH CREEK HEIGHTS BOOSTER STATION
PENN PARK RESERVOIR
BLOOMBERG BOOSTER STATION
MAYWOOD HILLS BOOSTER STATION
SPU MASTER METER, SITE NO. 6
SPU MASTER METER, SITE NO. 9
SPU MASTER METER, SITE NO. 1
NUD MASTER METER, SITE NO. 13
BOTHELL EVERETT HWY
NE 240TH ST
NE 202ND ST
NE 195TH ST
NE 190TH ST
NE 180TH ST
NORTH CREEK PKWY
RIVERSIDE DR.
WOODINVILLE DRIVE
BRICKYARD DR
WAYNITA DR
SAMMAMISH RIVER
Sammamish River
I-405
522
SNOHOMISH COUNTY
KING COUNTY
N
0 750 1,500 3,000 Feet
SCALE 1" = 1,500'
LEGEND:
GROUP B WELL
GROUP D WELL
MASTER METER
EMERGENCY INTERTIE
PRESSURE REDUCING VALVE
RESERVOIR
PUMP STATION
STUDY AREA
CITY LIMITS
PARCELS
WATER BODIES
COUNTY LINE
RIVERS/STREAMS
TOLT PIPELINE
PIPE DIAMETER:
16 INCH AND LARGER
14 INCH
12 INCH
10 INCH
8 INCH
6 INCH
4 INCH AND SMALLER
CITY OF BOTHELL
WASTEWATER COMPREHENSIVE PLAN
FIGURE 2-3
WATER SYSTEM
Gray & Osborne, Inc.
CONSULTING ENGINEERS
L:\Bothell\16521 Sewer Comprehensive Plan\GIS\WATER_SYSTEM.mxd

planning period for the City's sewer system should be long enough to be useful for an extended period of time, but not so long as to be impractical. The City has adopted 6-year and 20-year planning periods to allow for the implementation of its capital improvement program. The 6-year planning period for the City's Capital Improvement Plan is 2024, and the 20 year is 2038. The City will also analyze a build-out scenario to ensure proper sizing of facilities.

ZONING AND LAND USE

Figure 2-4 illustrates the land use and zoning within the City's UGA. Table 2-1 summarizes the land use within the entire City UGA and within the study area.

TABLE 2-1

Zoning

Zoning Classifications	Abbreviation	City Zoning (Acres)	Study Area (Acres)
Agriculture	AG	75.61	0.0
Campus	C	150.2	150.2
Downtown Core	DC	27.0	27.0
Downtown Neighborhood	DN	50.0	50.0
Downtown Transition	DT	40.5	38.6
General Commercial	GC	39.7	39.7
General Downtown Corridor	GDC	73.7	73.7
Neighborhood Business	NB	9.3	0.0
Office Professional	OP	4.8	0.0
Office Professional, Community Business, General Commercial	OP, CB, GC	6.3	0.0
Office Professional, General Commercial	OP, GC	14.9	0.0
Office Professional, Light Industrial	OP, LI	10.3	10.3
Park and Public Open Space	PPOS	97.1	97.1
Residential (1 DU/2,800 SQFT)	R 2,800	122.5	65.0
Residential (1 DU/2,800 SQFT), Mobile Home Park	R 2,800, MHP	7.1	7.1
Residential (1 DU/2,800 SQFT), Office Professional	R 2,800, OP	183.9	142.4
Residential (1 DU/2,800 SQFT), Office Professional, Community Business	R 2,800, OP, CB	27.1	0.0
Residential (1 DU/2,800 SQFT), Office Professional, Neighborhood Business	R 2,800, OP, NB	71.1	70.2
Residential (1 DU/4,000 SQFT)	R 4,000	136.8	45.4
Residential (1 DU/4,000 SQFT), Mobile Home Park	R 4,000, MHP	70.4	17.5
Residential (1 DU/4,000 SQFT), Office Professional, Community Business	R 4,000, OP, CB	48.1	7.0
Residential (1 DU/40,000 SQFT)	R 40,000	270.9	213.8
Residential (1 DU/40,000 SQFT), Low Impact Development, North Creek Fish and Wildlife Critical Habitat Protection Area	R 40,000, (LID), NCFWCHPA	134.7	0.0
Residential (1 DU/5,400 SQFT, attached or detached units)	R 5,400a	115.4	0.0

TABLE 2-1 – (continued)

Zoning

Zoning Classifications	Abbreviation	City Zoning (Acres)	Study Area (Acres)
Residential (1 DU/5,400 SQFT, attached or detached units), North Creek Fish and Wildlife Critical Habitat Protection Area	R 5,400a, NCFWCHPA	103.1	0.0
Residential (1 DU/5,400 SQFT, attached or detached units), Low Impact Development, North Creek Fish and Wildlife Critical Habitat Protection Area	R 5,400a, (LID), NCFWCHPA	57.7	0.0
Residential (1 DU/5,400 SQFT, attached or detached units), Office Professional	R 5,400a, OP	137.4	74.2
Residential (1 DU/5,400 SQFT, detached units only)	R 5,400d	109.8	18.8
Residential (1 DU/5,400 SQFT, detached units only), Specialized Senior Housing Overlay	R 5,400d, SSHO	1.7	1.7
Residential (1 DU/7,000 SQFT)	R 7,200	898.8	35.9
Residential (1 DU/8,400 SQFT)	R 8,400	702.1	513.4
Residential (1 DU/9,600 SQFT)	R 9,600	3220.9	1456.9
Residential (1 DU/9,600 SQFT), Mobile Home Park	R 9,600, MHP	33.2	0.0
Residential (1 DU/9,600 SQFT), Low Impact Development, North Creek Fish and Wildlife Critical Habitat Protection Area	R 9,600, (LID), NCFWCHPA	42.8	0.0
Residential (1 DU/9,600 SQFT), North Creek Fish and Wildlife Critical Habitat Protection Area	R 9,600, NCFWCHPA	27.1	0.0
Residential (1 DU/9,600 SQFT), Specialized Senior Housing Overlay	R 9,600, SSHO	41.1	41.1
Residential Activity Center, Office Professional, Community Business	R-AC, OP, CB	53.6	0.0
Residential Activity Center, Office Professional, Community Business, Light Industrial	R-AC, OP, CB, LI	523.0	418.1
Residential Activity Center, Office Professional, Community Business, Light Industrial, Motor Vehicle Sales Overlay	R-AC, OP, CB, LI, MVSO	96.9	38.8
Residential Activity Center, Office Professional, Community Business, Motor Vehicle Sales Overlay	R-AC, OP, CB, MVSO	154.9	0.0
Residential Activity Center, Office Professional, Light Industrial	R-AC, OP, LI	548.6	0.0
Residential Activity Center, Office Professional, Neighborhood Business	R-AC, OP, NB	102.0	18.2
Residential Activity Center, Office Professional, Neighborhood Business, Light Industrial	R-AC, OP, NB, LI	2.3	0.0
SR 522 Corridor	522	31.1	31.1
SR 522 Corridor, Mobile Home Park	522m MHP	9.1	9.1
Sunrise/Valley View	SVV	9.1	9.1
Total		**8714.0**	**3741.8**

As shown in Figure 2-4, the study area is primarily residential. There are commercial and multi-family areas located near downtown, and in the valley between I-405 and Bloomberg Hill.

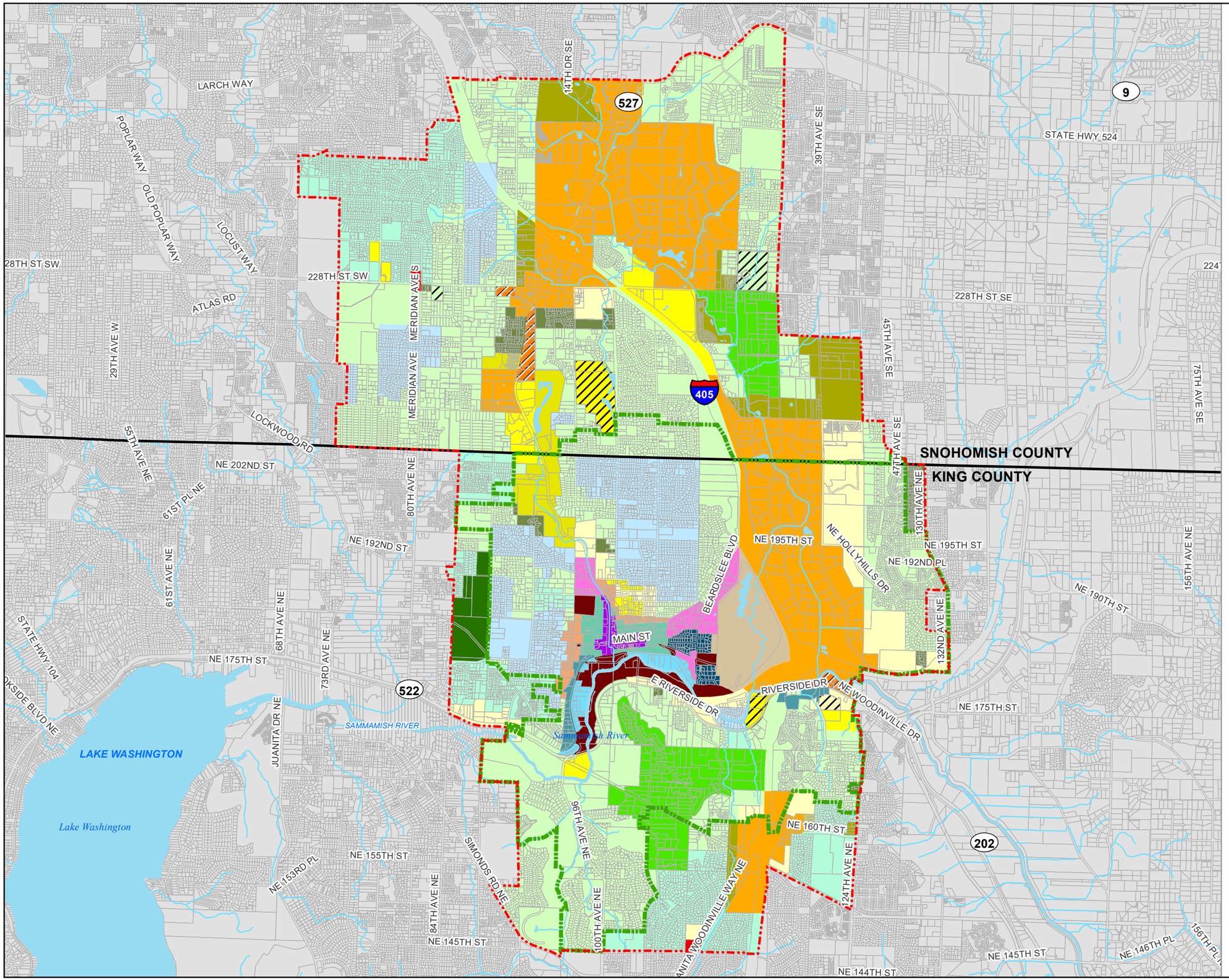

CITY OF BOTHELL

WASTEWATER COMPREHENSIVE PLAN
FIGURE 2-4

ZONING

Gray & Osborne, Inc.
CONSULTING ENGINEERS

L:\Bothell\16521 Sewer Comprehensive Plan\GIS\ZONING.mxd

SERVICE AREA CHARACTERISTICS

TOPOGRAPHY

The topography of the City has a significant influence on the sewer system. The elevation within the City ranges from approximately 20 feet above sea level to approximately 360 feet. Drainage in the City consists of the Sammamish River and North Creek drainage basins, with the northeastern portion of the City draining toward North Creek, and the northwest and southern portions of the City draining toward the Sammamish River. All stormwater runoff within the City is tributary to Lake Washington. A small portion of the City along the eastern border of the sewer service area resides within the Little Bear Creek drainage basin. The topography of the City and the surrounding areas is shown in Figure 2-5. Figure 2-6 illustrates the drainage basins in the vicinity of the study area.

CLIMATE

The City receives an average of 38 inches of rain per year, with approximately 73 percent occurring in the 6-month period from October to March. December is historically the wettest month, and July is the driest. Evaporation is less than 1 inch in December and approximately 6 inches in July.

Winds generally blow from the west, bringing a moderate, maritime climate inland. The average annual temperature is about 53 degrees F. August is the warmest month with an average temperature of about 66 degrees F and December is the coolest month with an average temperature of about 41 degrees F.

SURFACE WATER

The surface water features within the study area include the Sammamish River and North Creek, and several other smaller tributaries to the Sammamish River. The Sammamish River flows into the Puget Sound via Lake Washington.

The Sammamish River flows north from Lake Sammamish at Redmond, then turns west and flows through Bothell into the north end of Lake Washington. The Sammamish River drainage basin is approximately 212 square miles in size and historical records report peaks as high as 1,900 cubic feet per second (CFS).

North Creek drains a 25 square mile basin and has experienced peak flows of over 680 CFS. North Creek flows from north of the City south to its discharge point at the Sammamish River.

After decades flowing in an underground pipe, over 1/2 mile Horse Creek was daylighted through a new mixed use urban neighborhood as part of the city of Bothell's Downtown Revitalizations Plan. The creek discharges into the Sammamish River.

GEOLOGY

The geology within the study area, like most of King County, is characterized by deposits of glacial drift laid down during periods of glaciation. The most recent glaciation of the Puget Sound Lowland is termed the Vashon Glaciation, which scientists estimate began its northerly recession about 14,000 years ago. Subsequent erosion by ice melt cut steep sided canyons in the major valley walls and transported the eroded material to lowland areas where alluviation created flat valley floors, such as those found along North Creek and the Sammamish River. [1]

SOILS

The classification of soils within the study area is provided by the U.S. Department of Agriculture Soil Conservation Service General Soil Maps. The major soil classifications within the study area are the Alderwood Association, the Everett Association, and the Puget-Earlmont-Snohomish Association. Alderwood Association is the predominant soil type and is characterized as moderately well drained, undulating to hilly soils that have dense very slowly permeable glacial till at a depth of 20 to 40 inches. The valley surrounding North Creek and the Sammamish River consists of Puget-Earlmont-Snohomish Association, which is characterized by poorly drained and nearly poorly drained, nearly level soils that have layers of peat within a few feet of the surface. Soils along the eastern edge of the study area are classified as Everett Association, consisting of somewhat excessively drained, gravelly, gently undulating soil underlain by sand and gravel on terraces.

The Alderwood series is very slowly permeable, poorly draining silt or clay soils. Therefore, this series is not well suited for on-site sewage systems. [2]

CRITICAL AREAS

Critical areas within the study area include those classified as erosion hazard areas, seismic hazard areas, wetlands, flood hazard areas, slide hazard areas (steep slopes), and water bodies. The critical areas within the study area are shown in Figures 2-7 and 2-8.

---

[1] *Soil Survey King County Area Washington,* US Department of Agriculture, 1973.
[2] *Soil Survey King County Area Washington,* US Department of Agriculture, 1973.

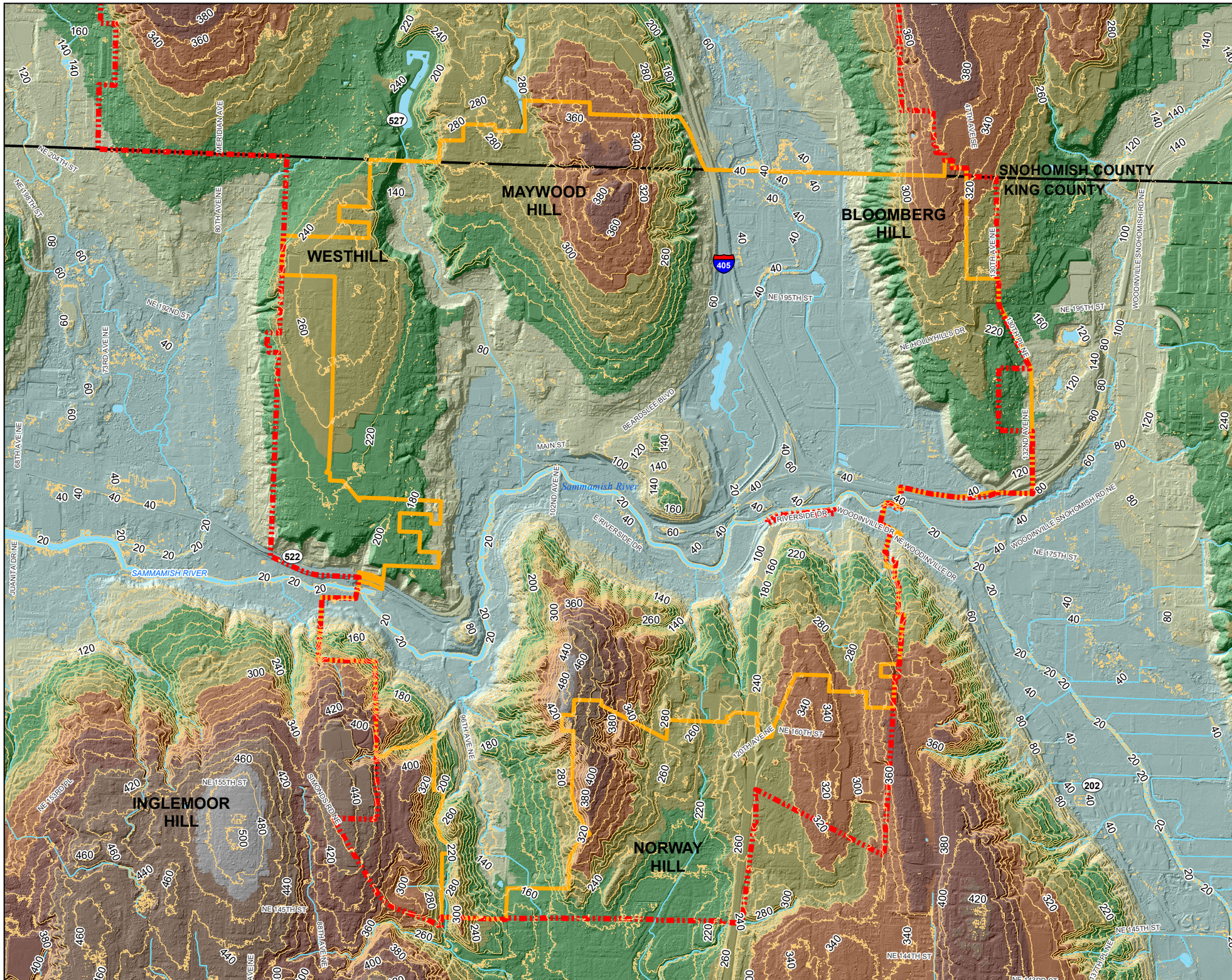

N

0 1,000 2,000 4,000 Feet

LEGEND:

- 20' CONTOURS - LIDAR
- CITY LIMITS
- STUDY AREA
- WATER BODIES
- RIVERS/STREAMS

ELEVATION (FT)

- < 70
- 70-150
- 150-230
- 230-300
- 300-365
- 365-415
- 415-470
- 470-650

DATA SOURCE: CITY OF BOTHELL,
KING COUNTY GIS DATA,
SNOHOMISH COUNTY GIS DATA,
PUGET SOUND LIDAR CONSORTIUM

CITY OF BOTHELL

WASTEWATER COMPREHENSIVE PLAN
FIGURE 2-5

TOPOGRAPHY

Gray & Osborne, Inc.
CONSULTING ENGINEERS

L:\Bothell\16521 Sewer Comprehensive Plan\GIS\TOPO.mxd

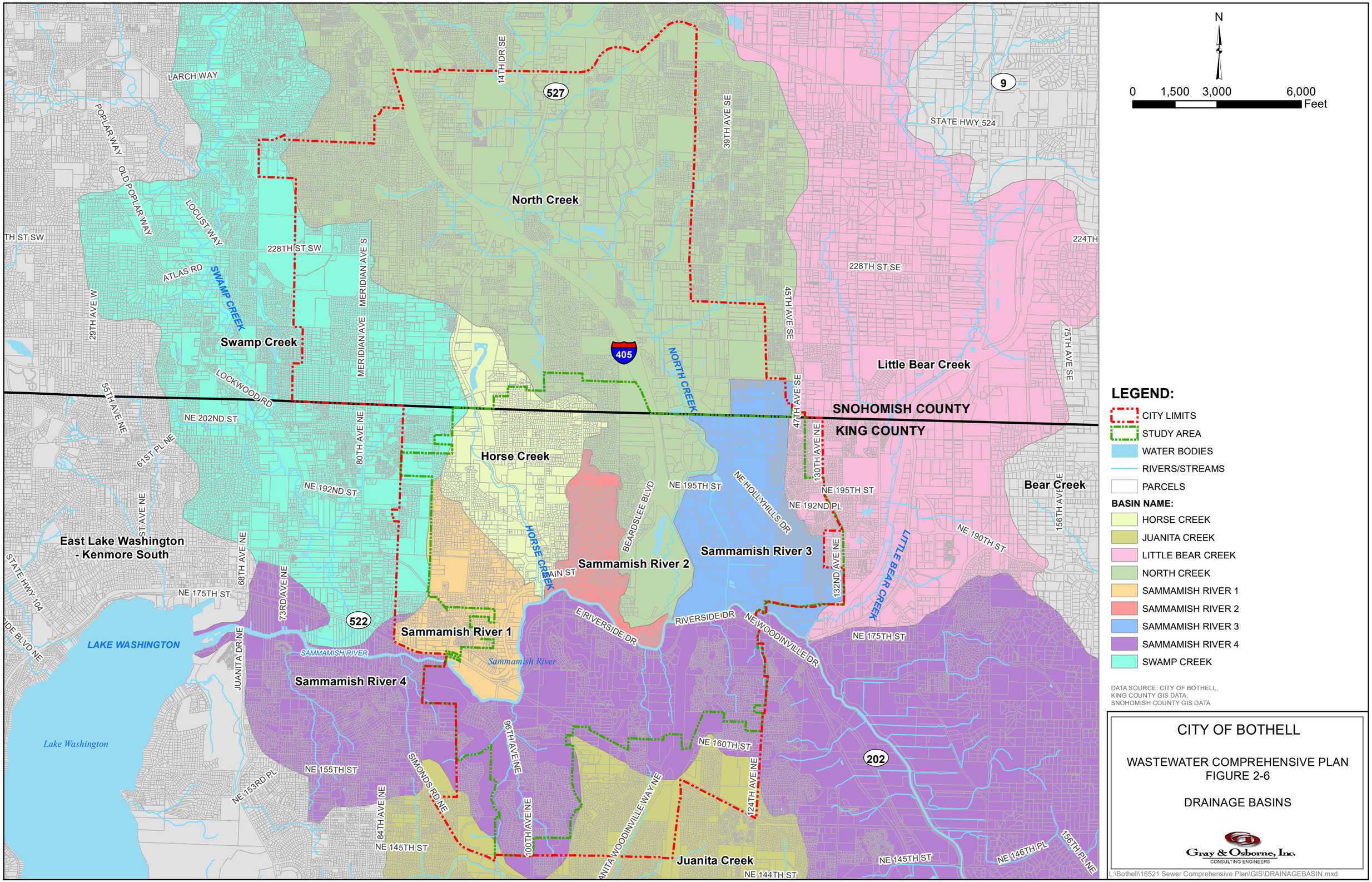
N
0 1,500 3,000 6,000
Feet
LEGEND:
CITY LIMITS
STUDY AREA
WATER BODIES
RIVERS/STREAMS
PARCELS
BASIN NAME:
HORSE CREEK
JUANITA CREEK
LITTLE BEAR CREEK
NORTH CREEK
SAMMAMISH RIVER 1
SAMMAMISH RIVER 2
SAMMAMISH RIVER 3
SAMMAMISH RIVER 4
SWAMP CREEK
DATA SOURCE: CITY OF BOTHELL,
KING COUNTY GIS DATA,
SNOHOMISH COUNTY GIS DATA
CITY OF BOTHELL
WASTEWATER COMPREHENSIVE PLAN
FIGURE 2-6
DRAINAGE BASINS
Gray & Osborne, Inc.
CONSULTING ENGINEERS
L:\Bothell\16521 Sewer Comprehensive Plan\GIS\DRAINAGEBASIN.mxd
North Creek
Swamp Creek
Horse Creek
Little Bear Creek
Bear Creek
Sammamish River 1
Sammamish River 2
Sammamish River 3
Sammamish River 4
Juanita Creek
East Lake Washington - Kenmore South
LAKE WASHINGTON
Lake Washington
SNOHOMISH COUNTY
KING COUNTY
SAMMAMISH RIVER
Sammamish River
SWAMP CREEK
NORTH CREEK
HORSE CREEK
LITTLE BEAR CREEK
527
9
405
522
202
LARCH WAY
POPLAR WAY
OLD POPLAR WAY
LOCUST WAY
ATLAS RD
LOCKWOOD RD
228TH ST SW
MERIDIAN AVE S
MERIDIAN AVE
14TH DR SE
39TH AVE SE
45TH AVE SE
47TH AVE SE
STATE HWY 524
228TH ST SE
224TH
75TH AVE SE
29TH AVE W
55TH AVE NE
61ST PL NE
NE 202ND ST
80TH AVE NE
NE 192ND ST
NE 195TH ST
NE HOLLYHILLS DR
NE 192ND PL
130TH AVE NE
BEARDSLEE BLVD
132ND AVE NE
156TH AVE NE
NE 190TH ST
68TH AVE NE
NE 175TH ST
73RD AVE NE
STATE HWY 104
MAIN ST
E RIVERSIDE DR
RIVERSIDE DR
NE WOODINVILLE DR
JUANITA DR NE
96TH AVE NE
NE 160TH ST
124TH AVE NE
NE 155TH ST
NE 153RD PL
SIMONDS RD NE
84TH AVE NE
100TH AVE NE
JUANITA WOODINVILLE WAY NE
NE 145TH ST
NE 144TH ST
NE 146TH PL
156TH PL NE

Erosion Hazard Areas

Erosion hazard areas are especially subject to erosion, if disturbed, and may not be well suited for high-density developments or intensive land uses. Erosion hazard areas within the study area are located in the steep slopes of Bloomberg Hill on the eastern portion of the study area, Norway Hill on the southern portion of the study area, Maywood Hill in the north central portion of the study area, and Westhill on the western portion of the study area. Steep slopes are shown in Figure 2-7.

Seismic Hazard Areas

Seismic hazard areas are those with low density soils that are more likely to experience greater damage due to seismic-induced subsidence, liquefaction, or landslides. Liquefaction zones within the City are located in the I-405 corridor surrounding North Creek and its tributaries, along the Sammamish River, and along the north slope of Norway Hill. Seismic hazard areas are illustrated in Figure 2-7.

Wetlands

Wetlands are defined by the EPA as areas that are inundated for at least part of the year. Wetlands support valuable and complex ecosystems and consequently development is severely restricted if not prohibited in most wetlands. Wetlands within the City are located primarily along the North Creek and Sammamish River drainage routes. Wetlands within the study area are illustrated in Figure 2-7.

Flood Hazard Areas

Flood hazard areas are areas adjacent to lakes, rivers, and streams that are prone to flooding during peak runoff periods. Flood hazard areas deserve special attention due to the sensitive nature of the ecosystems as well as the potential for damage to structures located in the floodplain. Flood hazard areas within the study area are illustrated in Figure 2-7.

Slide Hazard Areas

Slide hazard areas are those that are prone to unstable behavior due to steep slopes, lack of vegetation, or unconsolidated soils. The City has a number of steep slope areas, primarily along the hills and bluffs surrounding the study area. These areas include the slopes of Bloomberg Hill on the eastern portion of the service area, Norway Hill on the southern portion of the service area, Maywood Hill in the north central portion of the service area, and Westhill on the western portion of the service area. Steep slopes are illustrated in Figure 2-7.

Water Bodies

Lakes and streams are classified as sensitive areas due to the wide variety of plants and animals that they support. It should be noted that a majority of regulations discussed in Chapter 3 are designed to protect natural water bodies and their associated ecosystems. The primary water bodies within the study area are North Creek and the Sammamish River.

EXISTING SERVICE AREA

The City's existing service area is shown in Figure 2-1, along with the City's UGA and City limits. The City provided water and sewer service to the entire City limits prior to the Canyon Park annexation in 1992. AWWD provides water and sewer service to the majority of the Canyon Park annexation, which includes the portion of the City located in Snohomish County. As shown, the wastewater service area boundary includes a majority of the population located in the King County (South Bothell) portion of the City, and a small portion of population located in Snohomish County (North Bothell) portion of the City. The remaining population is served by Northshore in South Bothell and the AWWD in North Bothell.

The City also provides sewer service to small areas within WWD and transmission of sewer flows from an area within WWD prior to its discharge to KCDNR. These areas are served by the City by agreement (See Appendix A).

INDUSTRIAL WASTEWATER

There are currently 17 Industrial Wastewater Permits within the study area that permit discharge of commercial and industrial wastes into the sewer collection and King County treatment system. These permitted discharges include groundwater from remediation sites, water from construction sites, effluent from a municipal decant facility, and discharge from commercial facilities. In general, discharges from these sites are relatively low in volume and loading with respect to larger-scale industrial and manufacturing uses. Increased permitted commercial or industrial discharge is possible following future development and/or redevelopment at commercially-zoned parcels within the study area. Table 2-2 lists the industrial wastewater permit holders and a brief description of the type of wastewater discharge within the City of Bothell.

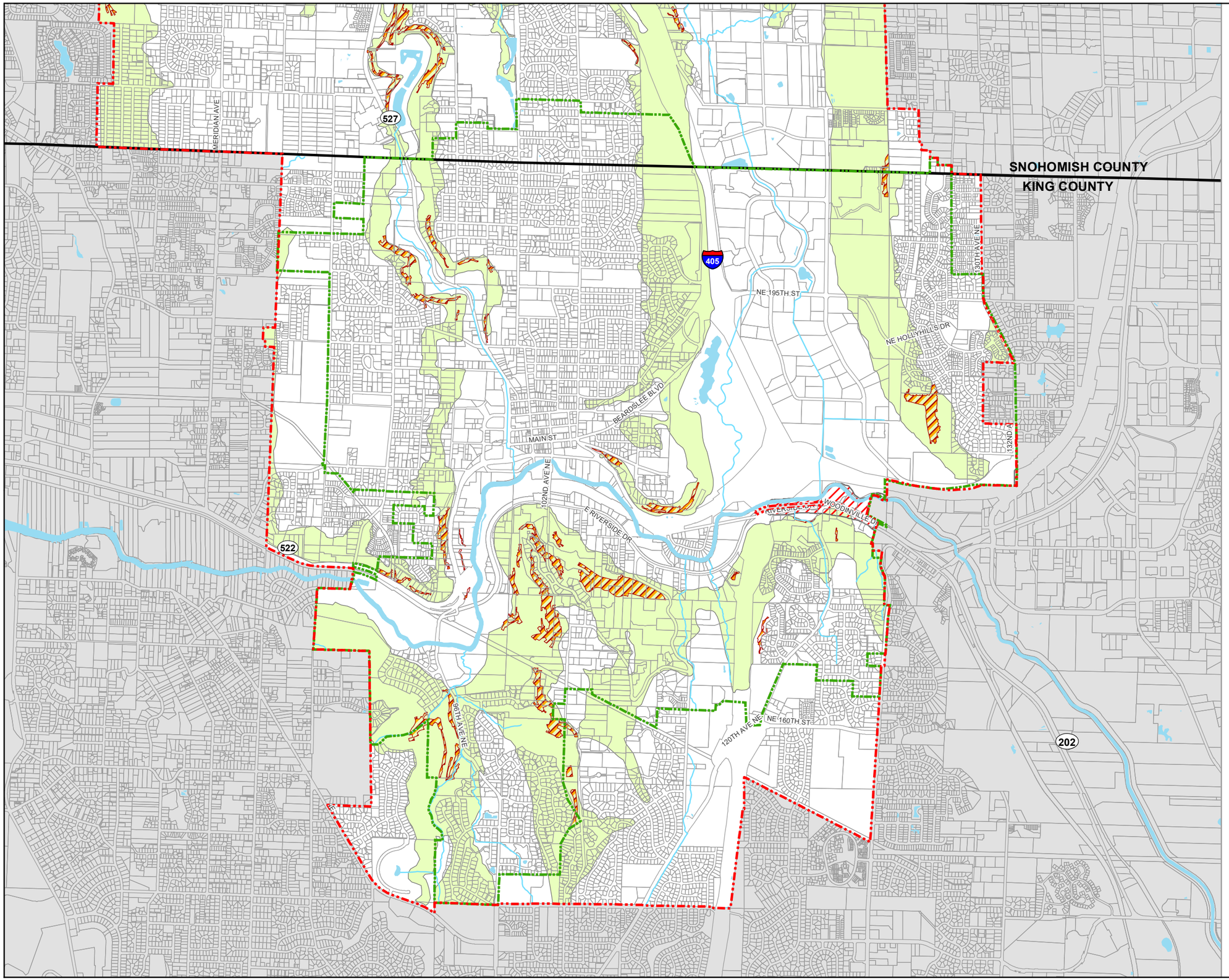

N

0 1,000 2,000 4,000 Feet

LEGEND:

- CITY LIMITS
- STUDY AREA
- WATER BODIES
- RIVERS/STREAMS
- SLOPES OVER 40%
- STEEP SLOPES
- SEISMIC SENSITIVE AREA

DATA SOURCE: CITY OF BOTHELL,
KING COUNTY GIS DATA,
SNOHOMISH COUNTY GIS DATA

CITY OF BOTHELL

WASTEWATER COMPREHENSIVE PLAN
FIGURE 2-7

CRITICAL AREAS

Gray & Osborne, Inc.
CONSULTING ENGINEERS

L:\Bothell\16521 Sewer Comprehensive Plan\GIS\SEISMIC.mxd

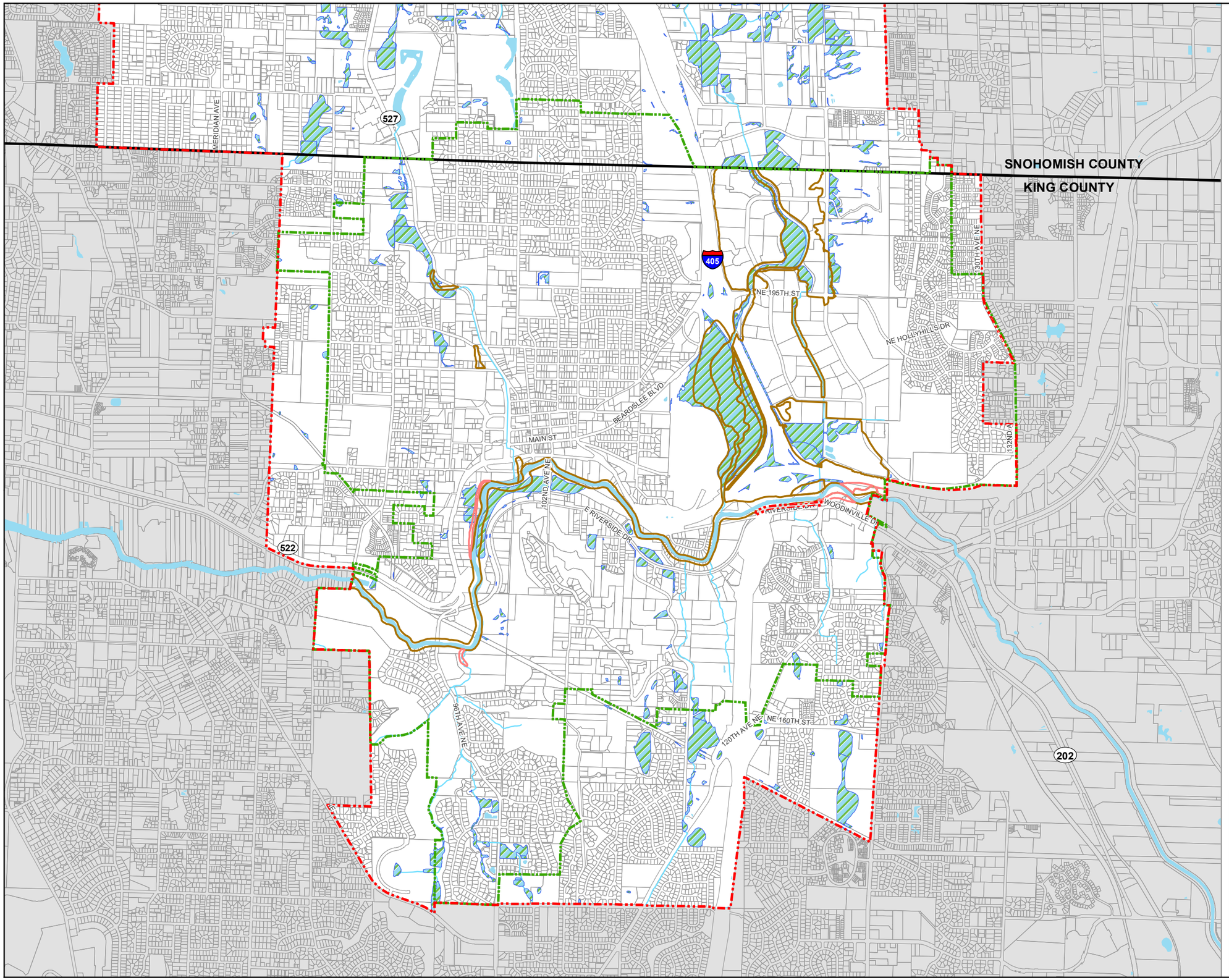

N

0 1,000 2,000 4,000 Feet

LEGEND:

- CITY LIMITS
- STUDY AREA
- RIVERS/STREAMS
- 500 YEAR FLOODPLAIN
- 100 YEAR FLOOD PLAIN
- WETLANDS

DATA SOURCE: CITY OF BOTHELL,
KING COUNTY GIS DATA,
SNOHOMISH COUNTY GIS DATA, FEMA

CITY OF BOTHELL

WASTEWATER COMPREHENSIVE PLAN
FIGURE 2-8

FLOODPLAINS AND WETLANDS

Gray & Osborne, Inc.
CONSULTING ENGINEERS

L:\Bothell\16521 Sewer Comprehensive Plan\GIS\FLOODPLAIN.mxd

TABLE 2-2

Industrial Wastewater Permit Holders

Industrial Waste Permit Holder	Type of Industrial Wastewater Discharge
98th Avenue Investment Partners LLC – 98th Avenue Apartments Construction Project	Site Construction Discharge
AT&T Data Center	Commercial Discharge
Bothell, City of – 98th Avenue NE and Main Street Groundwater Remediation Project	Groundwater Remediation Discharge
Bothell, City of – Decant Station	Decant Discharge
Bothell, City of – Riverside Groundwater Remediation Site	Groundwater Remediation Discharge
Brooks Applied Lab LLC	Commercial Discharge
CMC ICOS Biologics Inc.	Commercial Discharge
Epoch Biosciences Inc.	Commercial Discharge
Harbor Homes LLC – Taylor Subdivision Construction Project	Site Construction Discharge
King County WTD – North Creek Interceptor Improvement Project	Site Construction Discharge
Leviton Voice and Data	Commercial Discharge
Mill Creek Crossing LLC – Prime Cleaners Remediation	Groundwater Remediation Discharge
Music and Arts - Bothell	Commercial Discharge
Northwest Naturals LLC – Bothell Facility	Commercial Discharge
Romac Industries Inc.	Commercial Discharge
Seattle Genetics North Creek	Commercial Discharge
Teledyne Blueview, Inc.	Commercial Discharge

ON-SITE SEWAGE SYSTEMS

There are approximately 130 privately owned and maintained on-site sewage systems within the City Service area as of fall 2018. These systems are primarily associated with older, large-parcel residential properties that were previously developed in low-density areas that have since been annexed from King and Snohomish Counties. Redevelopment of many of these properties is anticipated prior to 2040 and mandatory connection to the City of Bothell sewer system and abandonment in accordance with City and State standards will be required at time of development.

FUTURE SERVICE AREA

For the purpose of the Plan, it is assumed that the City's future wastewater service area will not change significantly. The Plan does not include areas currently served by other utility districts. The Plan will concentrate on in-fill of the City's existing wastewater service area for planning and wastewater flow projections.

POPULATION

To evaluate the wastewater system's existing facilities and determine requirements for future facilities, the City's existing and projected population has been estimated and is used to project future flows.

Existing Population

Prior to the annexation of the King County annexation areas effective February 28, 2014, the study service area was roughly equivalent to the King County portion of the existing City limits. Exceptions to this generalization occur in an area near 132nd Avenue NE and NE 187th Place within the City of Woodinville that is served by the City of Bothell, and an area in Snohomish County within the AWWD boundary that is served by the City. Prior to the 2014 King County annexation, the existing population is assumed to be equivalent to the King County portion of the city limits with the addition of approximately 850 parcels which account for the portions of the service area in Snohomish County and City of Woodinville. After the 2014 annexation, the parcels within the City limits but outside the sewer service area are subtracted from the King County population numbers.

Census data indicates a population of 17,090 within the King County Portion of the City limits in 2010. Accounting for the portions of the service area in Snohomish County and the City of Woodinville, the 2010 population in the sewer service area is estimated to be 17,928. Employee population is taken from the City of Bothell *2012 Water System Comprehensive Plan*.

Table 2-3 presents the City's historical sewer service connections for the past 5 years. Based on this historical growth, the City has averaged approximately 1.7 percent growth annually.

TABLE 2-3

Historical Growth of Sewer Service Connections

Year	Connections Per Year	Total Connections	Percent Annual Growth(1)
2012	--	5,123	N/A
2013	93	5,216	1.8
2014	166	5,382	3.2
2015	33	5,415	0.6
2016	69	5,487	1.3
Average Annual Growth			**1.7**

(1) Annual growth in sewer connections from previous year.

Projected Population

The City has developed 20-year population projections for the City based on future land use and historical growth rates. The City's projected population for 2036 within the incorporated King County portion of the City, and the sewer service area, is 27,121 for residential population, and 15,198 for employee population. Employee population includes the student, staff, and faculty population of the University of Washington Cascadia Campus. Growth has been extrapolated from 2015 to 2036 to represent population projections for the 20-year planning period based on the Washington State Office of Financial Management *2015 Population Trends* and 2035 population and employment targets from City of Bothell's 2015 *Imagine Bothell Comprehensive Plan.*

The study area includes one high school, three public elementary schools, two private elementary schools, and one private high school. The estimated student population of these schools for the 2015-2016 school year is approximately 5,000. The City residential population growth rate is applied to the existing school population to estimate future school populations.

Population projects for the City are shown in Table 2-4.

TABLE 2-4

Study Area Population Projections

Year	Service Area Residential Population	Service Area Employee Population(4)	Service Area School Population(5)
2010	17,928(1)	11,625	4,805
2011	17,988(2)	11,693	4,677
2012	18,118(2)	11,773	5,080
2013	18,278(2)	11,852	5,198
2014	21,176(2)	11,932	5,186
2015	21,933(2)	12,011	5,000
2016	22,155(3)	12,146	5,051
2017	22,381(3)	12,283	5,102
2018	22,608(3)	12,422	5,154
2019	22,838(3)	12,562	5,206
2020	23,070(3)	12,703	5,259
2021	23,304(3)	12,846	5,313
2022	23,541(3)	12,991	5,367
2023	23,780(3)	13,138	5,421
2024	24,022(3)	13,286	5,476
2025	24,266(3)	13,436	5,532
2026	24,513(3)	13,587	5,588
2027	24,762(3)	13,740	5,645
2028	25,014(3)	13,895	5,702

TABLE 2-4 – (continued)

Study Area Population Projections

Year	Service Area Residential Population	Service Area Employee Population(4)	Service Area School Population(5)
2029	25,268(3)	14,052	5,760
2030	25,525(3)	14,210	5,819
2031	25,784(3)	14,370	5,878
2032	26,046(3)	14,532	5,938
2033	26,311(3)	14,696	5,998
2034	26,578(3)	14,861	6,059
2035	26,848(3)	15,029	6,121
2036	27,121(3)	15,198	6,183
Buildout	36,055	20,801	8,206

(1) Estimated from 2010 Census data.
(2) Estimated from the Washington State Office of Financial Management *2015 Population Trends.*
(3) Interpolated from 2010 Census data and 2035 information from the *2015 Imagine Bothell Comprehensive Plan*.
(4) Employee population includes student, staff, and faculty populations at the UW/Cascadia Campus.
(5) School populations estimated based on actual enrollment for 2015-2016 plus populations for area private schools from Washington State Office of Superintendent of Public Instruction. School populations are projected at the same rate as residential population.

As a comparison, the number of sewer connections for each year from 2012 through 2016 is presented in Table 2-3. Based on the increase in sewer connections, the City's annual growth rate from 2012 to 2016 was 1.7 percent. The projected growth rate for the King County portion of the City from the Washington State Office of Financial Management is 1.0 percent for residential population and 1.1 percent for employee population.

CHAPTER 3

REGULATORY REQUIREMENTS

INTRODUCTION

Wastewater collection system planning includes an analysis of the City's ability to comply with the applicable regulatory requirements while providing a high level of service for existing and future customers. These requirements are outlined in federal, state, and local regulations, and enforced by a number of agencies. This chapter presents the various legislation, regulations, permits, agencies, and design standards that may affect City wastewater collection operations. The discussion presented here is general in nature; specific issues will be addressed as they occur within the context of following chapters.

LEGISLATION, REGULATIONS, AND PERMITS

In this section, the various state and federal legislation that may affect City operations are discussed, as well as other relative permits, programs, and regulations. Table 3-1 provides a list of state and federal regulations that may apply to the City.

TABLE 3-1

Existing Wastewater Regulations(1)

Regulation	Action Required by City?
Phase I National Pollutant Discharge Permits:	
• Municipal/industrial point source discharges	No
• Industrial stormwater discharges	Yes
• Separated storm sewers (100,000 or more)	No
• Construction sites 5 acres or greater	Yes
Phase II National Pollutant Discharge Permits:	
• Municipal discharges (10,000 or more)	Yes
• Municipal discharges (10,000 or less)	Yes
• Construction sites 1 acre or greater	Yes
CSO Control Policy Strategy	No
National Pretreatment Program	Yes
Section 401 Water Quality Certification	Yes
Section 404 Wetland Modification Permit	Yes
EPA Capacity, Management, Operation and Maintenance	No
Endangered Species Act	Yes
Reclaimed Water Standards	Yes
National Environmental Policy Act	Yes
Federal Clean Air Act	No

TABLE 3-1 – (continued)

Existing Wastewater Regulations(1)

Regulation	Action Required by City?
State Water Pollution Control Act	Yes
State Environmental Policy Act	Yes
Growth Management Act	Yes
Shoreline Management Act Permit	Yes
Floodplain Development Permit	Yes
Hydraulic Project Approval	Yes
Local Right-of-Use Permit	Yes

(1) Wastewater regulations as of February 2018.

FEDERAL CLEAN WATER ACT

The Federal Water Pollution Control Act is the principal law regulating the water quality of the nation's waterways. Though originally enacted in 1948, it was significantly revised in 1972 and 1977, when it was commonly titled the "Clean Water Act" (CWA). The CWA has been amended several times since 1977. The 1987 amendments replaced the Construction Grants program with the State Revolving Fund (SRF) which provides low-cost loans for a range of water quality infrastructure projects.

The National Pollutant Discharge Elimination System (NPDES) is established by Section 402 of the CWA and subsequent amendments. The Washington State Department of Ecology (Ecology) administers NPDES permits under the authority of the United States Environmental Protection Agency (EPA). Most NPDES permits are valid for five years and place limits on the quantity and quality of pollutants that may be discharged. NPDES permits granted under Phase I of the CWA regulate point source discharges including wastewater discharges to surface waters from municipal or industrial wastewater treatment facilities, stormwater discharges from industrial facilities, construction sites of more than five acres, and stormwater discharges from separate storm sewers serving populations of more than 100,000. Under Phase II rules, promulgated by EPA in March of 1999, NPDES permits are required for surface water discharges from construction sites greater than one acre, municipalities of 10,000 or more, and communities smaller than 10,000 with urban characteristics.

The 1985 enactment of the Revised Code of Washington (RCW) 90.48.480 and Washington State Administrative Code (WAC) 173-245 required all municipalities with combined sewer overflows (CSOs) to develop a plan to reduce annual CSOs to one event per year. The National CSO Control Strategy (1989, Federal Register 37370) officially classified combined sewer overflows as point source discharges subject to regulation under NPDES and CWA. In 1994, EPA published a CSO Control Policy Strategy (Federal Register 18688) that limits CSOs to four to six events per year depending on the sensitivity of the receiving water.

Section 307 of the CWA established the National Pretreatment Program. This program is designed to protect publicly owned treatment facilities and limits the amount of industrial or other non-residential pollutant discharged to municipal sewer systems.

Since the City does not discharge wastewater, it is not required to obtain an NPDES permit associated with sewage treatment and wastewater discharge. However, the City does maintain NPDES permit coverage under the Phase II Municipal Stormwater General Permit (MSGP). The MSGP contains requirements that do relate to this plan, such as illicit connections of sanitary sewer with stormwater system. Separate Construction Stormwater General Permits are also required should private or public projects exceed land disturbing and discharge thresholds. The City may also be affected by pretreatment requirements of King County Department of Natural Resources' NPDES permit as well as increased costs associated with treatment requirements imposed by future permits. Although the City is currently not required to obtain an NPDES permit, new regulations issued by EPA are anticipated under the Capacity Management Operation, and Maintenance (CMOM) amendments to the NPDES permit process that could impact agencies that manage collection systems. CMOM is specifically addressed in a later section in this chapter.

A 401 Water Quality Certification is required under the CWA for any activity that may result in discharge to surface waters including excavation activities that occur in streams, wetlands, or other waters of the United States.

Section 404 of the CWA regulates discharges of fill or dredged materials in wetlands, including any related draining, flooding, and excavation. Pipeline and lift station projects in wetlands will require a Section 404 permit, National Environmental Policy Act (NEPA) documentation (generally provided by the Corps of Engineers), Endangered Species Act consultation, and National Historic Preservation Act (NHPA) consultation with the Washington State Department of Archaeology & Historic Preservation in addition to any related local permits. Activities that impact more than one-third of an acre will also require a Section 401 Certification.

CAPACITY, MANAGEMENT OPERATION AND MAINTENANCE

The Environmental Protection Agency (EPA) has drafted an amendment to the NPDES regulations to address Sanitary Sewer Overflows (SSOs). The legal basis for this Capacity, Management Operation and Maintenance (CMOM) regulation is that nearly all collection systems have unplanned releases at some time and that these releases must be regulated under the jurisdiction of the Clean Water Act. The EPA currently has not set a timetable for CMOM implementation.

ENDANGERED SPECIES ACT

The 1973 Endangered Species Act (ESA) "provide(s) a means whereby the ecosystems upon which endangered and threatened species depend may be conserved..." The ESA authorizes the US Fish and Wildlife Service (USFWS) and the National Marine Fisheries Service (NMFS) to list species as endangered or threatened and to identify and designate the critical habitat of listed species. USFWS has jurisdiction over all terrestrial and freshwater plants and animals, while NMFS is responsible for the protection of all marine species.

ESA listings significantly impact activities that may affect salmon and trout habitat, such as water use, land use, construction activities, and wastewater treatment and disposal. Impacts of ESA regulations include longer timelines for permitting processes and more stringent regulation of construction impacts and development.

It is illegal for the government or individuals to "take" a listed species. "Take" is interpreted by the federal courts to include, "significant modification or degradation of critical habitat" that impairs essential behavior patterns. Section 4(d) of the ESA directs the Services to issue regulations to conserve species listed as threatened. This applies particularly to "take," which can include any act that kills or injures fish, and may include habitat modification. The ESA prohibits <u>any</u> take of endangered species, but some take of threatened species that does not interfere with salmon survival and recovery can be allowed.

City activities will need to comply with any future provisions of the Section 4(d) rule, as well as revised critical areas ordinances adopted by local governments served by the City.

NATIONAL ENVIRONMENTAL POLICY ACT

The National Environmental Policy Act was established in 1969 and requires federal agencies to determine environmental impacts on all projects requiring federal permits or funding. If the project is determined to be environmentally insignificant a Finding of No Significant Impact (FONSI) is issued, otherwise an Environmental Impact Statement (EIS) is required. It is not anticipated that City activities will fall under the National Environmental Policy Act.

FEDERAL CLEAN AIR ACT

The Federal Clean Air Act requires all wastewater facilities to plan to meet the air quality needs of the region. The permitting of facilities is based upon a mass balance being performed to review if a facility is required to seek an air permit from a federal and/or local permitting agency. At this time, it is not anticipated that the current or future facilities would require a federal permit since only large wastewater treatment facilities are required to have permits. Puget Sound Clean Air Agency is the regional air quality authority, which does not require a permit for the construction and operation of collection

system facilities. Puget Sound Clean Air Agency is the air authority for King, Pierce, and Snohomish Counties.

STATE WATER POLLUTION CONTROL ACT

The intent of the state Water Pollution Control Act is to "…maintain the highest possible control standards to ensure the purity of all waters of the state consistent with public health and the enjoyment…the propagation and protection of wildlife, birds, game, fish and other aquatic life, and the industrial development of the state." The state Water Pollution Control Act is the primary authority under which Ecology operates with respect to water quality protection under RCW 90.48 and WAC 173-200 to 173-270. The passage of the state Water Pollution Control Act and federal Clean Water Act helped Washington State make important progress in cleaning up our rivers, lakes, and coastal waters largely by controlling pollution from factories, sewage plants, and other "point" sources of pollution.

STATE ENVIRONMENTAL POLICY ACT

The WAC 173-240-050 requires a statement in all wastewater comprehensive plans regarding proposed projects in compliance with the State Environmental Policy Act (SEPA), if applicable. The capital improvements proposed in this plan will fall under SEPA regulations. A non-project SEPA checklist is included in Appendix B of this report to comply with the requirements of SEPA. In most cases a Determination of Non-Significance is issued; however, if a project will have a probable significant adverse environmental impact an Environmental Impact Statement will be required. Utility lines 8 inches in diameter or smaller are categorically exempt from SEPA review; however, the City may wish to prepare a SEPA review for construction projects in environmentally sensitive areas.

GROWTH MANAGEMENT ACT

The Washington State Growth Management Act (GMA) was enacted in 1990 and requires certain local governments to plan for the population growth that will occur over the next 20 years within an established Urban Growth Area. The GMA also requires cities and the county to classify critical areas (wetlands, aquifer recharge areas, fish and wildlife habitat areas, geologically hazardous areas, and frequently flooded areas) and to establish development regulations to protect these areas.

SHORELINE MANAGEMENT ACT PERMIT

A Shoreline Permit is required on all projects that cost $2,500 or more that are located on the water or within a shoreline area. Shorelines are defined by lakes or reservoirs of 20 acres or greater, streams with a mean annual flow of 20 cubic feet per second or greater, marine waters, and an area inland 200 feet from the ordinary high water mark. Within the City, North Creek and the Sammamish River have Shoreline Management Act requirements associated with development within 200 feet.

FLOODPLAIN DEVELOPMENT PERMIT

Local governments that are participating in the National Flood Insurance Program are required to review projects (including wastewater collection facilities) in a mapped flood plain and impose conditions to reduce potential flood damage from flood water. A Floodplain Development Permit is required prior to construction. Areas where a Floodplain Development Permit may be required include the flood hazard areas shown in Figure 2-6, Site Sensitive Areas. Floodplain areas are located within the City along North Creek and the Sammamish River.

HYDRAULIC PROJECT APPROVAL

Under the Washington State Hydraulic Code (WAC 220-110), the Washington State Department of Fish and Wildlife requires a Hydraulic Project Approval for activities that will "use, divert, obstruct, or change the natural flow or bed" of any waters of the state. For City activities such as pipeline crossings of streams, a Hydraulic Project Approval will be required, and must include provisions necessary to minimize project specific and cumulative impacts to fish.

Because of ESA listings throughout Washington, the Washington State Department of Fish and Wildlife and NMFS are in the process of revising the Hydraulic Code to protect species listed as threatened or endangered. If NMFS determines that the revisions are sufficient to protect listed species, the State hopes the revised code will constitute an acceptable Habitat Conservation Plan under Section 10 of the ESA. If the acceptable Habitat Conservation Plan is approved, NMFS issues an Incidental Take Permit allowing incidental take of a listed species if the permittee has complied with the Habitat Conservation Plan. This Incidental Take Permit expires after an agreed upon period of time, and may then be revised by NMFS.

LOCAL PERMITS

The City has the power to issue right-of-way permits to allow construction and maintenance of facilities in their respective right of ways. The City specifies construction standards such as traffic control, work hours, and safety issues, as well as design and restoration standards for facilities constructed within City right-of-way.

REGULATORY AGENCIES

The above regulations, permits, and programs are administered by various local, state, and federal agencies. The history, purpose, and authority of these agencies are discussed below.

United States Environmental Protection Agency

The stated mission of the EPA is to protect human health and to safeguard the natural environment upon which life depends. EPA's purpose includes protecting all Americans from significant human health risks, ensuring that national environmental efforts are based on the best available scientific information, ensuring that federal laws are enforced fairly, and that environmental protection contributes to making our communities and ecosystems diverse, sustainable, and economically productive. The Washington Department of Ecology (Ecology) currently administers NPDES permits and SRF loans on behalf of the EPA. United States Fish and Wildlife Service.

Under the ESA, USFWS is responsible for the protection of all non-marine life such as Bull Trout. Though USFWS may choose to invoke the blanket prohibitions of Section 9, the "threatened" status of Bull Trout allows more flexibility to establish regulations designed to protect these species. These regulations, known collectively as the Section 4(d) rule, outline activities likely to result in a "take" of a threatened species, as well as exempted activities.

National Marine Fisheries Service

Under the ESA, NMFS is responsible for the protection of marine life, including anadromous salmon such as the Puget Sound Chinook. When a species is listed as "endangered" the prohibitions against "take" of the species are immediate under Section 9 of the ESA. Though NMFS may choose to invoke the blanket prohibitions of Section 9, the "threatened" status of the Puget Sound Chinook allows more flexibility to establish regulations designed to protect these species. These regulations, known collectively as the Section 4(d) rule, outline activities likely to result in a "take" of a threatened species, as well as exempted activities.

United States Army Corps of Engineers

Under the CWA, the US Army Corps of Engineers (Corps) is authorized to regulate discharge of fill and dredged material to waters of the United States, including wetlands. The Corps employs a system of General or Nationwide Permits for blanket authorization of activities, such as utility lines that have minimal adverse impact on the environment. In situations where adverse impact is probable, the Corps may issue an Individual Permit after reviewing an analysis of alternatives. Enforcement actions may be brought by the Corps or the EPA.

Washington State Department of Ecology

The mission of Ecology's Water Quality Program is to protect, preserve, and enhance surface and ground water quality and to promote the wise management of water for the benefit of current and future generations. Ecology performs various functions under state and federal authority and has both local and regional offices. Ecology is also responsible

for awarding low-interest loans for pollution control projects through the SRF, and low interest loans and grants through the Centennial Clean Water Fund.

Ecology issues permits under the State Water Pollution Control Act, Section 401 Water Quality Certification, and NPDES permits in compliance with the CWA under EPA authority. Ecology also reviews and approves plans for on-site systems exceeding 100,000 gallons per day (gpd), all systems receiving state or federal construction grants under the CWA, and systems using mechanical treatment or lagoons with ultimate design flows above 3,500 gpd. Ecology regulates discharge of waste to the state's groundwater and discharge of industrial or commercial wastes to sewers through the Solid Waste Discharge permit program and the use of reclaimed water through WAC 173-219, Reclaimed Water.. Ecology's regional offices issue Temporary Modification of Water Quality Criteria Permits for construction near or in water that might cause short-term water quality violations.

Washington State Department of Fish and Wildlife

Under WAC 220-110 and RCW 75.20, any form of work that uses, diverts, obstructs, or changes the natural flow or bed of any fresh water of the state requires hydraulic project approval from the Department of Fish and Wildlife. Approval would be required for all City construction projects that cross or otherwise take place in streams or shorelines.

State and Local Health Departments

The Washington State Department of Health (DOH) was formed in 1989 and is the primary state agency responsible for reserving public health. DOH approves on-site waste disposal systems between 3,500 and 100,000 gpd.

The King County Health District and the Snohomish Health District are the local health department governing the City. In general, local health departments may adopt and enforce local regulation when they are consistent with or more stringent than state regulations. The local health departments have approval authority for onsite systems with design flows of up to 3,500 gpd.

CITY AND COUNTY PLANNING POLICIES

Wastewater utility planning policies should be consistent with City, King, and Snohomish County planning policies. Accordingly, adoption of this Plan will require approval by the City as well as King and Snohomish County.

DESIGN, CONSTRUCTION, OPERATION, AND MAINTENANCE STANDARDS

In 1998, Ecology updated its *Criteria for Wastewater Works Design*. It serves as a guide for the design of wastewater collection, treatment, and reclamation systems. This criteria provides a basis for the design of collection and treatment systems as well as to aid regulating agencies in their determination of whether an approval, permit, or certificate should be issued. All wastewater facilities must meet Ecology, local, and City design standards. The City's design standards are included in Appendix C.

PRETREATMENT REQUIREMENTS

Industrial and some commercial dischargers to the City of Bothell collection system are subject to local (King County) and national (40 Code of Federal Register, Part 403) pretreatment standards. Industrial or commercial development can have a considerable impact on the sanitary sewer collection system immediately downstream of the facility. Industrial waste can contain high concentrations of chemicals that can make the waste highly corrosive or toxic. King County's regulations ("local limits") include restrictions on discharge pH, flammable or explosive materials, fats, oils and greases (FOG), heavy metals and cyanide, temperature, hydrogen sulfide, organic compounds, and settleable solids. The authorization to discharge industrial wastewater comes in the form of a discharge authorization or waste discharge permit issued by King County's Industrial Waste (KCIW) Program. The KCIW Program is a state delegated authority to implement the Federal Pretreatment Program in the King County tributary systems like Bothell. This program administers the waste discharge permits, inspections, enforcements, compliance and collection of surcharge monitoring fees. The program also works with business to help them implement pollution prevention practices. The industrial dischargers submit monthly self monitoring reports to the King County Industrial Waste Program to confirm compliance with their NPDES permits. Additionally, King County conducts twice yearly monitoring of the discharges.

Although Bothell does not have a large proportion of industrial dischargers relative to other communities, it is important that industrial discharges be identified, characterized, and, if necessary, controlled. Dischargers that discharge wastewater with excessive levels of pollutants may be required to implement pretreatment if it is determined that such discharges would otherwise exceed standards or adversely affect human health, the environment, or wastewater conveyance or treatment efficacy.

Implementation of a pretreatment and FOG program can assist the City enforcing standards that ensure the integrity of its collection system and prevents sanitary sewer overflows. Although requirements and implementation varies from community to community, King County may require companies discharging polar FOG to complete a FOG control plan. The goal of the FOG control plan is to implement reasonable and technically feasible controls of free-floating polar FOG. The basic components of the FOG control plan should include:

1. A written policy articulating management and corporate support for the plan and a commitment to implement planned activities and achieve established goals.

2. A description of the facility type and a summary of the products made and/or service provided.

3. Quantities of FOG brought into the facility as raw product, amounts contained in products, and quantities discharged to the sewer.

4. Schematics of process areas illustrating drains and discharge points connected to the sewer.

5. A description of current reduction, recycling, and treatment activities.

6. Identification of a full range of potentially feasible reduction opportunities.

7. A description of the reduction or control opportunities selected for implementation, process(es) affected, and estimated reductions to be achieved.

8. Specific performance goals and implementation schedule.

GRAVITY SYSTEM

Ecology's design criteria requires that gravity systems be designed large enough to carry peak hourly flows, as well as steep enough to provide a minimum scouring velocity of 2 feet per second when flowing full. The City also has minimum standards for manhole construction and details specifying trench configuration, depth of cover, bedding materials, and road overlays that meet or exceed Ecology's standards. The current City design standards for gravity systems are consistent with those of Ecology.

LIFT STATIONS

Lift stations and force mains must also be designed according to Ecology guidelines. The City has design standards that meet or exceed current Ecology standards. The City operates submersible, wet well/dry well and wet well mounted styles of stations. The City has standards for pump controls and telemetry. The current City design standards for lift stations are consistent with those of Ecology.

ON-SITE SEPTIC SYSTEMS

In some cases, wastewater may be treated and disposed of on-site either by individual septic systems or community on-site systems. Municipalities, such as cities and counties, are required under the GMA to eventually provide wastewater collection services to all residents of the Urban Growth Area that are currently not connected. The City is planning for service to all areas within its sewer boundary whether or not the area is currently sewered or incorporated. Service to areas currently on septic systems will be by developer extension.

RECLAIMED WATER STANDARDS

"Reclaimed water" is defined in RCW 90.46.010 as "water derived in any part from wastewater with a domestic wastewater component that has been adequately and reliably treated, so that it can be used for beneficial purposes. Reclaimed water is not considered a wastewater." Use of reclaimed water is an alternative to effluent disposal. In the State of Washington, any type of direct beneficial reuse of municipal wastewater is defined as water reuse or reclamation. WAC 173-219, Reclaimed Water, effective February 23, 2018, implements RCW 90.46, reclaimed water use and establishes requirements for production, distribution and use of reclaimed water.

BRIGHTWATER WASTEWATER TREATMENT FACILITY

King County Department of Natural Resources (KCDNR) produces Class A reclaimed water at the Brightwater Wastewater Treatment Facility (WWTF). Class A reclaimed water treatment consists of a side stream off the membrane bioreactor and disinfection; the reclaimed water is treated separately from the WWTF effluent to be disposed of via the outfall to Puget Sound. Membrane effluent is disinfected at the WWTF and then flows by gravity through a dedicated 27-inch diameter that runs from Brightwater to the influent structure at the Brightwater Influent Pump Station, located in the City of Bothell. Reclaimed water is conveyed south to the North Creek Pump Station via a 27-inch diameter pipeline. From the North Creek Pump Station, reclaimed water is conveyed through a 30-inch pipeline south to the York Pump Station Site. Reclaimed water exiting the YPS site enters a 20-inch/18-inch diameter pipeline that runs approximately two miles; the alignment runs eastward along NE 124th St and then southward along the west bank of the Sammamish River.

The distribution network also includes a westward alignment for future use. A dedicated 24-inch diameter reclaimed water line runs between the Brightwater Influent Pump Station and the North Kenmore Portal. This alignment currently is not used. In the future, a wester distribution system may be constructed from the North Kenmore Portal. The distribution system has a capacity of 21 MGD (*Brightwater Facility Plan, May 2005*).

The reclaimed water service areas, pipeline alignment and distribution portals are displayed on Figure 3-1. At each of these portals, the reclaimed water is brought to the

surface for distribution. The North Creek Portal and North Creek Pump Station are located within the City Study Area in the North Creek Parkway business parks.

As of fall 2018, the County has eight active use areas outside of the Brightwater facility. The reclaimed water is primarily used for irrigation. Reclaimed water is also used at the Brightwater Influent, North Creek, York and Hollywood Pump Stations for process water. In 2017, approximately 62 MG of reclaimed water was used (Brightwater Reclaimed Water Use Summary, 2017).

PERMITTED USES OF RECLAIMED MUNICIPAL WASTEWATER

Allowable water reuse methods of Class A reclaimed water include:

- Irrigation of Non-Food Crops
    - Spray Irrigation of Food Crops.
- Surface Irrigation
    - Food crops where there is no reclaimed water contact with edible portion of crop.
    - Root crops.
    - Orchards and vineyards.
    - Food crops that undergo physical or chemical processing sufficient to destroy all pathogenic agents.
- Landscape Irrigation
    - Restricted access areas (e.g., cemeteries, freeway landscaping).
    - Open access areas (e.g., golf courses, parks, playgrounds, etc.).
- Impoundments
    - Landscape impoundments.
    - Restricted recreational impoundments.
    - Non-restricted recreational impoundments.
- Fish Hatchery Basins
- Decorative Fountains
- Flushing of Sanitary Sewers

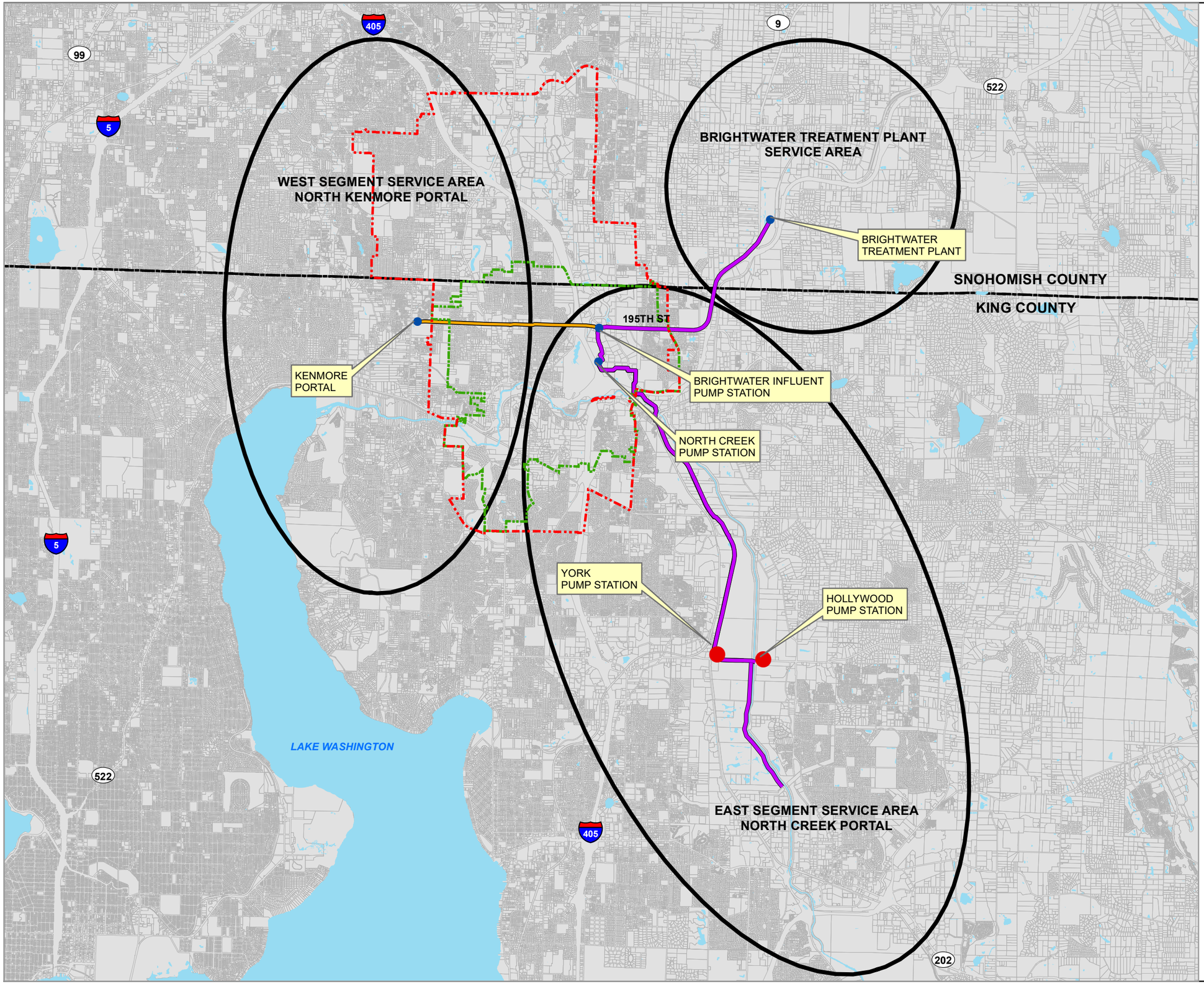

N

0 3,000 6,000 12,000 Feet

LEGEND:

- CITY LIMITS
- STUDY AREA
- RECLAIMED WATER DISTRIBUTION PIPE
- RECLAIMED WATER DISTRIBUTION PIPE (FUTURE USE)
- WATER BODIES

DATA SOURCE: CITY OF BOTHELL,
KING COUNTY GIS DATA,
SNOHOMISH COUNTY GIS DATA

CITY OF BOTHELL

WASTEWATER COMPREHENSIVE PLAN
FIGURE 3-1

BRIGHTWATER RECLAIMED WATER
SERVICE AREAS

Gray & Osborne, Inc.
CONSULTING ENGINEERS

L:\Bothell\16521 Sewer Comprehensive Plan\GIS\BRIGHTWATER_RECLAIMEDAREAS.mxd

- Street Cleaning
    - Street sweeping, brush dampening.
    - Street washing, spray.
    - Washing of corporation yards, lots, and sidewalks.
- Dust Control (Dampening Unpaved Roads, Other Surfaces)
- Dampening of Soil for Compaction (Construction, Landfills, etc.)
- Water Jetting for Consolidation of Backfill Around Pipelines
- Fire Fighting and Protection
    - Dumping from aircraft.
    - Hydrants or sprinkler systems in buildings.
- Toilet and Urinal Flushing
- Washing Aggregate and Making Concrete
- Industrial Boiler Feed
- Industrial Cooling
- Industrial Process

With access to reclaimed water within the North Creek Parkway business and industrial park, many of these uses are feasible for the City. Irrigation uses would be seasonal, but industrial applications can be applied year-round. Two other reuse methods that offer the potential for 100 percent reuse on a year-round basis are groundwater recharge and stream flow augmentation. A more detailed discussion of groundwater recharge and stream flow augmentation is provided.

Groundwater Recharge and Streamflow Augmentation

Groundwater recharge and streamflow augmentation using reclaimed water are permitted under the water reuse standards. However, the Brightwater facility is not currently approved for these uses and significant planning efforts would be required of the county to gain necessary approvals. Previous planning efforts for Brightwater concluded that groundwater recharge was not a viable use.

Other Uses

The water reuse standards allow for a number of other uses that are not discussed in detail here. However, the general basis for the reuse criteria is that when unlimited public access to the reclaimed water is involved, the criteria requires Class A reclaimed water. The use of reclaimed water for agricultural purposes is allowed under the water reuse standards, including food crops, as proper setback distances are employed. These setback distances are discussed in the next section.

REUSE AREA REQUIREMENTS

The water reuse standards establish criteria for siting and identifying water reclamation projects and their facilities. Water reclamation storage facilities, valves, and piping must be clearly labeled, and no cross-connections between potable water and reclaimed water lines are allowed. A key area requirement for a water reclamation project is setback distance. Table 3-2 summarizes setback requirements for water reclamation facilities.

TABLE 3-2

Setback Distances for Class A Reclaimed Water in the State of Washington

Reclaimed Water Use/Facility	Distance (Feet)
Minimum Distance to Potable Water Well:	
Spray or Surface Irrigation	50
Unlined Storage Pond or Impoundment	500
Lined Storage Pond or Impoundment	100
Pipeline	50
Minimum Distance between Irrigation Area and Public Areas	0

POTENTIAL FOR IRRIGATION WATER REUSE

Reclaimed water could be used for irrigation and landscape purposes. The City has an annual average rainfall of approximately 38 inches. Due to the significant amount of rainfall during winter months, reclaimed water could be used for irrigation only during the summer. Many of the parks within the City are irrigated, including several athletic and play fields at schools and the public parks. Privately owned business that potentially could use reclaimed water have also been identified. The North Creek Parkway business and industrial park irrigates green space and also has several athletic play fields that could benefit from reclaimed water irrigation. Additional business with irrigation needs in the downtown area could also use reclaimed water for irrigation. The City will study potential irrigation use sites in the upcoming feasibility study.

POTENTIAL FOR INDUSTRIAL WATER REUSE

In addition to irrigation, industries within the City that might have a use for reclaimed water have been investigated. These include the significant industrial water users of the City, many with cooling systems. The City's top consumers will be targeted for both industrial and irrigation uses for reclaimed water. Specific customers will be identified in the feasibility study.

FLUSHING OF SANITARY SEWER LINES

One possible application of reclaimed water by the City could be to flush (clean) the sanitary sewer lines. Water may be obtained from the North Creek Portal to facilitate flushing until additional distribution lines are installed.

RECLAIMED WATER CONCLUSION

The City completed a study analyzing the economic feasibility of utilizing reclaimed water within the water retail service area and throughout the City in February 2013. A copy of the Study is included as Appendix H. Reclaimed water from Brightwater is available at the North Creek Portal within the study area.

CHAPTER 4

SYSTEM DESIGN CRITERIA

INTRODUCTION

Adequate design of the City's wastewater conveyance facilities requires the determination of the quantity of wastewater from contributing sources. The City's wastewater is predominantly domestic in origin, with lesser amounts contributed by commercial and industrial businesses and by public use facilities, such as schools, parks, hospitals, and municipal functions. Infiltration and inflow contributions results from groundwater and surface water entering the sewer system during periods of rainfall or as a result of high groundwater levels.

Data from previous years are used to estimate unit quantities for critical parameters related to population, land use and overall land area in the existing service area. These unit quantities are then applied to the projected future population, comprehensive land use and the future land area to be served to determine the design criteria for selecting and sizing various components required to serve the study area in future years.

DEFINITION OF TERMS

In this Chapter, wastewater characteristics for the existing service area are analyzed and projections made for future conditions. The terms and abbreviations used in the analysis are described as follows:

WASTEWATER

Wastewater is defined as wastes carried by water from residential, business and public use facilities, together with quantities of groundwater and surface water which enter the sewer system through defective piping and direct surface water inlets. The total wastewater flow is quantitatively expressed in millions of gallons per day (mgd) or in gallons per minute (gpm).

DOMESTIC WASTEWATER

Domestic wastewater is generated by single and multi-family residences. Domestic wastewater flow is generally expressed as a unit flow based on the average contribution from each person per day. The unit quantity is expressed in terms of gallons per capita per day (gpcd).

INFILTRATION

Infiltration is defined as groundwater that enters a sewer system by means of defective pipes, pipe joints, or manhole walls. Infiltration quantities generally exhibit seasonal variation in response to groundwater levels. Storm events can typically trigger a rise in groundwater levels and an increase in infiltration flows. The highest infiltration flows are observed following significant storm events or following prolonged periods of precipitation. Since infiltration is related to the total amount of piping and appurtenances in the ground and not to any specified water use component, it is generally expressed in terms of the total land area being served or in terms of the lengths and diameters of sewer pipe. The unit quantity used in this study is gallons per acre per day (gpad).

INFLOW

Inflow is surface water that enters the sewer system from yard, roof and footing drains, from cross-connections with storm drains, and through holes in manhole covers. Peak inflow can occur during heavy storm events when storm sewer systems are surcharged, resulting in hydraulic backups and local ponding. Inflow is expressed in terms of gallons per acre per day (gpad).

AVERAGE DRY WEATHER FLOW (ADWF)

Average dry weather flows consists of wastewater that flows during periods when the groundwater table is low and the precipitation is at its lowest of the year. The dry weather flow period normally occurs from June to September. The average dry weather flow is taken to be the average daily flow during the three lowest consecutive flow months of the year.

PEAK DOMESTIC FLOW

Peak domestic flow is wastewater from domestic sources during the peak hour of a day. Peak domestic flow is an estimate of the domestic wastewater produced by the simultaneous discharge to the sewer system by the entire population of a drainage basin. A peaking factor is determined by taking the ratio of the peak hour flow to the average day flow.

MAXIMUM WINTER MONTH FLOW

Maximum winter month flow is the average daily flow during the highest flow month of the year. This flow is composed of the normal domestic flow with contributions to the sewer system from infiltration and inflow. Maximum Winter Month Flow is typically used in the agreements for purchased capacity in wastewater treatment facilities. The City does not have any maximum winter month flow requirements in its agreement with KCDNR. A copy of the agreement with KCDNR is located in Appendix A.

PEAK WET WEATHER FLOW (PWWF)

The peak hour wastewater flow is the highest wet weather flow during the day. This flow includes contributions to the sewer system from infiltration and inflow and from peak domestic discharge. Peak Wet Weather Flows are used in sizing and evaluating the hydraulic capacity of conveyance and pumping components of a wastewater collection system.

WASTEWATER FLOW DESIGN CRITERIA

To properly design the City's sanitary sewer facilities, it is necessary to determine the unit quantities for each of the major components that constitute the volume of sewage flows. The two unit quantities to be identified are domestic wastewater and infiltration and inflow. The domestic wastewater unit is generally expressed as gallons per capita per day (gpcd).

Estimates of sewage flows for the study area and individual drainage basins requires the application of the unit flow design criteria to the size of the contributing area, the comprehensive land use for the contributing area, and the projected population to be served within the contributing area.

AVERAGE DOMESTIC FLOW

Winter water consumption records are used to develop existing and future average domestic and commercial sewer flow values. To negate the effect of irrigation water use, which is water that generally does not enter the sewer system, water consumption records are utilized during the winter period to estimate the amount of water that is generally discharged to the sewer system. The City's records for February 2010 through January 2016 are used to determine residential and employee per capita winter water consumption. For each month, the water consumed in mgd, the number of customers served, and the estimated population served are used to calculate per capita water usage. The calculated values are presented in Table 4-1.

Residential water consumption is defined by the City's historical records for water system connections in the residential, apartments, mobile homes, and duplex customer classes. Water system residential population is based on the water system population defined in Table 2-17 in the Water System Comprehensive Plan. Commercial water consumption is defined by the City's historical records for water system connections in the commercial and the government/schools customer classes. Employee population is based on 34.4 employees per connection, which is derived from the City's 2010 estimated employee population of 11,625 and 337 commercial and government/schools accounts. The remaining employee population is calculated based on 34.4 employees per connection and the City's historical records for commercial and government/schools accounts.

TABLE 4-1

Winter Water Use

Year	Month	Average Residential Consumption (mgd)(1)	Residential Accounts(1)	Water System Residential Population(2)	Residential Per Capita Consumption (gpcd)	Average Commercial Flow (mgd)(1)	Commercial Accounts(1)	Water System Employee Population	Employee Per Capita Consumption (gpcd)
2010	Jan/Feb	0.66	3,367	17,200	38	0.24	337	11,625(3)	20
2010	Nov/Dec	0.88	3,394	17,312	51	0.32	338	11,659(4)	28
2011	Jan/Feb	0.65	3,378	17,383	37	0.25	335	11,556(4)	22
2011	Nov/Dec	0.75	3,395	17,453	43	0.33	338	11,659(4)	28
2012	Jan/Feb	0.76	3,395	17566	43	0.29	334	11,521(4)	25
2012	Nov/Dec	0.72	3,410	17,679	41	0.28	332	11,453(4)	25
2013	Jan/Feb	1.18	3,400	17,792	66	0.28	334	11,521(4)	24
2013	Nov/Dec	0.68	3,388	17,904	38	0.25	330	11,384(4)	22
2014	Jan/Feb	Not Available	Not Available			0.62	329	11,349(4)	55
2014	Nov/Dec	0.70	3,527	18,130	39	0.29	329	11,349(4)	26
2015	Jan/Feb	0.79	3,514	18,243	43	0.29	322	11,108(4)	26
2015	Nov/Dec	0.85	3,580	18,355	46	0.36	331	11,453(4)	31
Average		0.78	3,432	17,729	44	0.32	333	11,470	28

(1) Based on City water use records for winter water use months. Residential accounts include the residential, apartments, duplex and mobile homes customer classes. Commercial accounts include the commercial and government/schools customer classes.

(2) Water system residential population is taken from the City of Bothell *2012 Water System Comprehensive Plan*, Table 2-17.

(3) Water system employee population for 2010 is taken from the City of Bothell *2012 Water System Plan*, Table 2-17. The estimated employee population is within the King County portion of the City limits. This area is approximately congruent with the City's water system service area boundary for commercially zoned areas. This includes students, staff, and faculty for the University of Washington Bothell Campus.

(4) Based on City records for the commercial and government/schools customer classes and an average of 34.4 employees per connection from City estimates for 2010 employee population.

Based on the winter water use shown in Table 4-1, the City has had a residential winter water use of 44 gpcd, and an average employee winter water use of 28 gpcd since 2010. To be conservative, a per capita flow of 50 gpcd for residential sewer flows and 30 gpcd for commercial flows will be applied to project sewer flows and for hydraulic modeling of the sewer system.

The Washington State Department of Ecology *Criteria for Sewage Works Design* recommends a per capita design flow of 16 gpcd for schools with a cafeteria and showers, and 10 gpcd for schools with a cafeteria but without showers. Since the majority of the student population in the study area is associated with Bothell High School, which is equipped with showers, the value of 16 gpcd is applied to the school population within the study area. The student population for the University of Washington Bothell Campus is included in the employee population estimates, so is not included in the school population projections.

Wastewater Equivalent Residential Unit (ERU)

The number of City single-family and multi-family residential sewer connections in 2016 was 5,175. With an estimated 2016 population of 22,155, the City has approximately 4.28 persons per connection. The Washington State Office of Financial Management estimates a single-family residential population of approximately 2.3 persons per household for the King County Portion of the City of Bothell. Applying the 2.3 persons per household to the 4,867 single-family connections yields a population of approximately 11,194 people. The remaining population of 10,961 people are attributed to the 308 apartment, mobile home, and duplex connections, which is an average of 35.59 persons per connection. The large number of persons per connection can be attributed to a number of large homeowner associations and apartment complexes that are billed as one connection and not by their individual units.

Applying 50 gpcd to the single-family residential population of 2.3 persons per household yields an equivalent residential unit (ERU) of 115 gpd.

DOMESTIC FLOW PEAKING FACTOR

A peaking factor is used to convert average domestic flow to peak domestic flow. With the exception of four lift stations that serve a small portion of the service area, the City primarily serves areas that flow by gravity directly to the King County Interceptor, where there is no ability to measure flows. To develop a peaking factor, the diurnal curve for drinking water developed by the Washington State Department of Health (DOH) is applied. The DOH curve is illustrated in Figure 4-1.

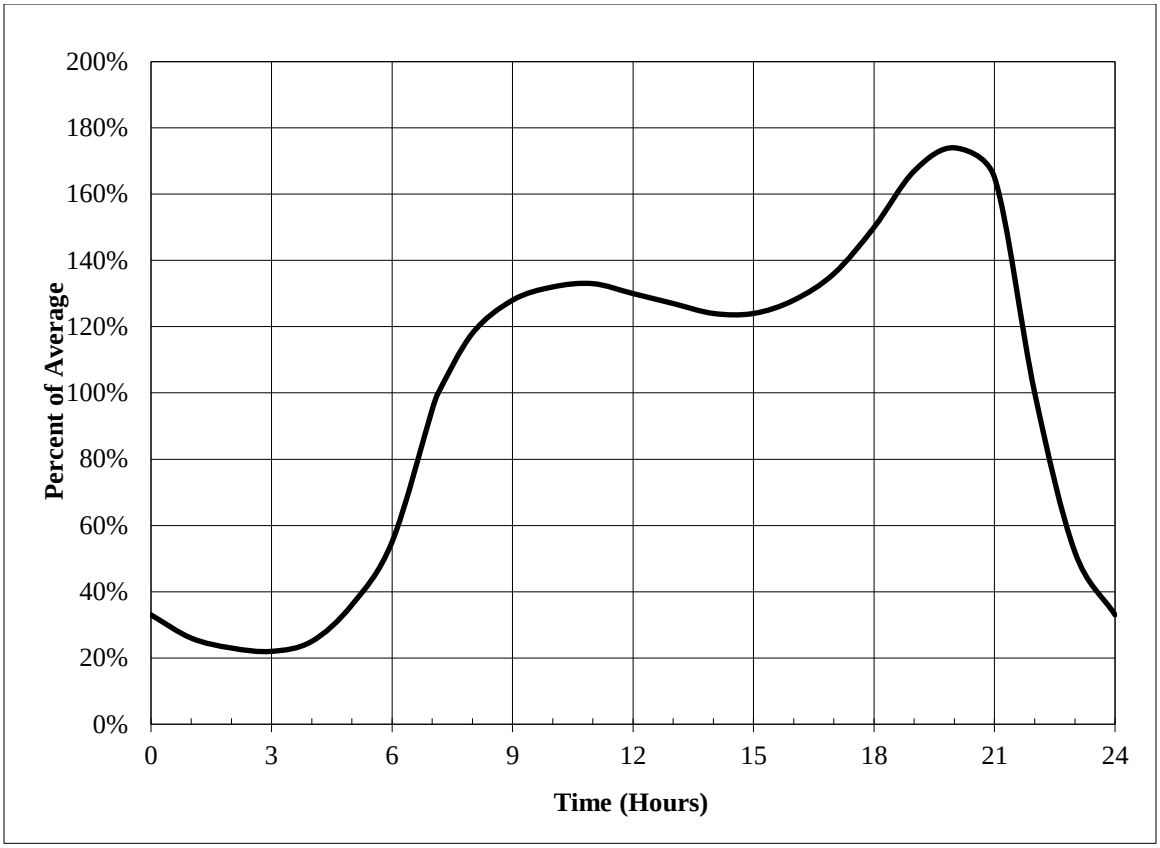

FIGURE 4-1

DOH Diurnal Curve

INFILTRATION AND INFLOW

King County conducted flow monitoring of 15 basins within the City's sewer service area as part of its Regional Infiltration/Inflow (I/I) Control Program *2001/2002 Wet Weather Flow Monitoring*. Flow monitoring was conducted from November 2001 through January 2002, with ten storm events occurring during this period.

For the Plan, the mini basins established by KCDNR have been reconfigured to follow parcel lines and the City sewer service area boundary. Figure 4-2 maps the reconfigured mini basins within the City sewer service area boundary. Some areas of the City were not monitored by KCDNR; mini basins have been created for these areas. The KCDNR I/I values were renormalized to the *total* area of the basin. The renormalized I/I values have then been applied to the reconfigured basins. Three storm event were removed from the study set for KCDNR basin BOT002 because of anomalous results. Recorded peak 30 minute I/I rates for the 15 basins ranged from 432 gpad to 11,108 gpad.

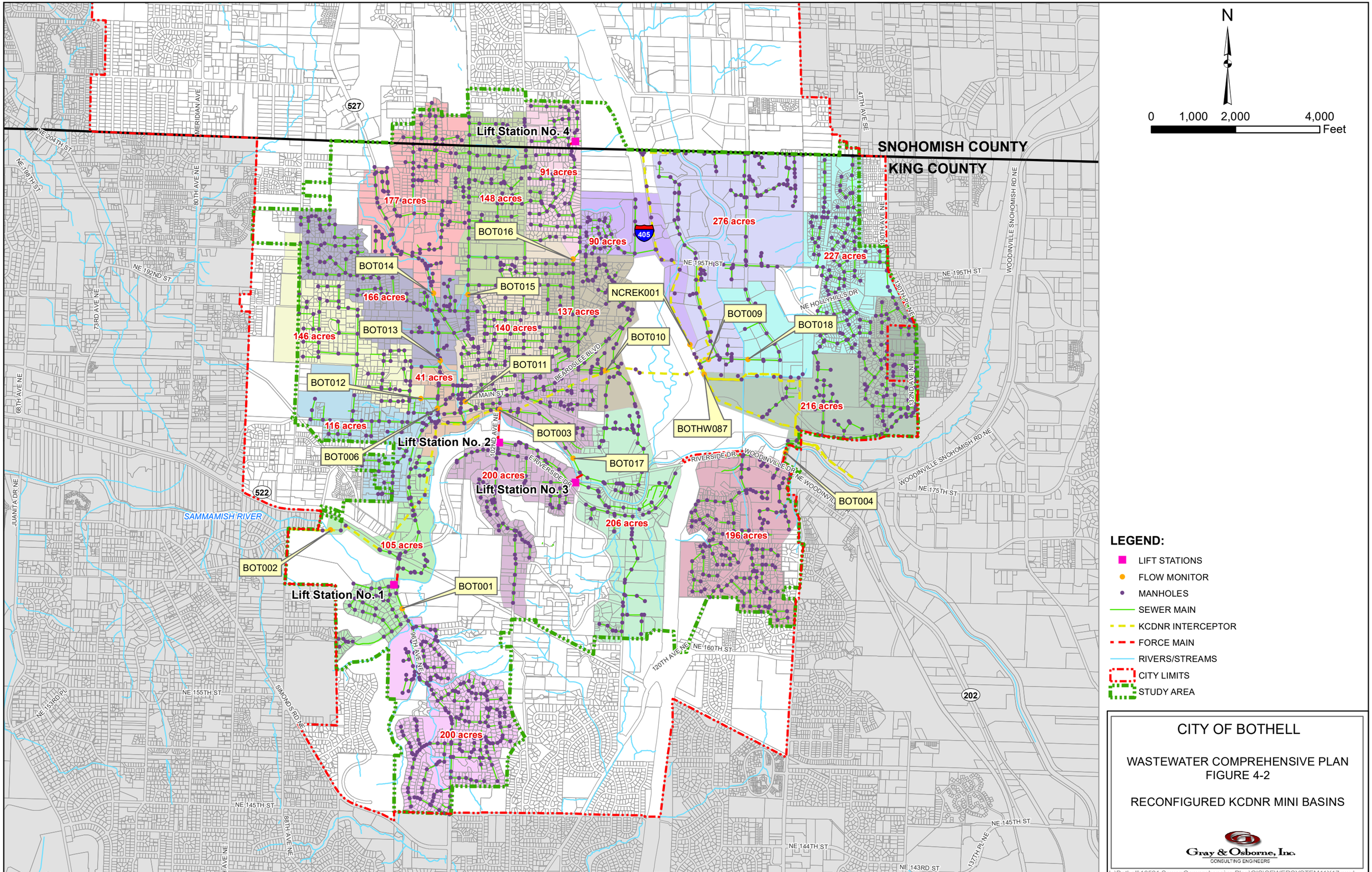
N
0 1,000 2,000 4,000
Feet
SNOHOMISH COUNTY
KING COUNTY
Lift Station No. 4
Lift Station No. 2
Lift Station No. 3
Lift Station No. 1
91 acres
177 acres
148 acres
90 acres
276 acres
227 acres
166 acres
137 acres
140 acres
146 acres
41 acres
116 acres
216 acres
200 acres
206 acres
196 acres
105 acres
200 acres
BOT016
BOT014
BOT015
NCREK001
BOT009
BOT018
BOT013
BOT010
BOT011
BOT012
BOT003
BOTHW087
BOT006
BOT017
BOT004
BOT002
BOT001
SAMMAMISH RIVER
NE 204TH ST
NE 198TH ST
NE 192ND ST
NE 195TH ST
NE HOLLYHILLS DR
BEARDSLEE BLVD
MAIN ST
E RIVERSIDE DR
RIVERSIDE DR
WOODINVILLE DR
NE WOODINVILLE DR
WOODINVILLE SNOHOMISH RD NE
NE 175TH ST
NE 160TH ST
NE 155TH ST
NE 145TH ST
NE 144TH ST
NE 143RD ST
MERIDIAN AVE
80TH AVE NE
73RD AVE NE
68TH AVE NE
JUANITA DR NE
47TH AVE SE
130TH AVE NE
131ST PL NE
132ND AVE NE
102ND AVE NE
96TH AVE NE
120TH AVE NE
SIMONDS RD NE
88TH AVE NE
137TH PL NE
NE 153RD PL
527
522
405
202
LEGEND:
LIFT STATIONS
FLOW MONITOR
MANHOLES
SEWER MAIN
KCDNR INTERCEPTOR
FORCE MAIN
RIVERS/STREAMS
CITY LIMITS
STUDY AREA
CITY OF BOTHELL
WASTEWATER COMPREHENSIVE PLAN
FIGURE 4-2
RECONFIGURED KCDNR MINI BASINS
Gray & Osborne, Inc.
CONSULTING ENGINEERS
L:\Bothell\16521 Sewer Comprehensive Plan\GIS\SEWERSYSTEM11X17.mxd

Table 4-2 provides a summary of the results from the King County 2001/2002 Wet Weather Flow Monitoring report. Table 4-3 provides a summary of the I/I values for the reconfigured basin area. Based on the reconfigured basin I/I values, the City's collection system currently has a 30-minute peak I/I value of approximately 1,301 gpad. Historically, 1,100 gpad has been a benchmark I/I rate used by KCDNR for future planning purposes. In the *Updated Planning Assumptions for Wastewater Flow Forecasting (2014),* KCDNR updated this value to 2,000 gpad for new sewers with a degradation rate of 7 percent per decade.

TABLE 4-2

King County Wet Weather Flow Monitoring Results

Basin Name	Nov. 4, 2001 Estimated 30-minute Peak Total I/I (gpad)(1)	Nov. 13. 2001 Estimated 30-minute Peak Total I/I (gpad)(1)	Nov. 19, 2001 Estimated 30-minute Peak Total I/I (gpad)(1)	Nov. 21, 2001 Estimated 30-minute Peak Total I/I (gpad)(1)	Nov. 28, 2001 Estimated 30-minute Peak Total I/I (gpad)(1)	Dec. 12, 2001 Estimated 30-minute Peak Total I/I (gpad)(1)	Dec. 15, 2001 Estimated 30-minute Peak Total I/I (gpad)(1)	Jan. 1, 2002 Estimated 30-minute Peak Total I/I (gpad)(1)	Jan. 6, 2002 Estimated 30-minute Peak Total I/I (gpad)(1)	Jan. 12, 2002 Estimated 30-minute Peak Total I/I (gpad)(1)	Average Estimated 30-minute Peak Total I/I (gpad)(3)
BOT001	642	683	634	816	782	640	1,126	1,107	1,091	1,038	846
BOT002	D/E	D/E	5,130	8,495	7,008`	N/A	11,108	8,007	10,524	7,377	8,236
BOT003	859	2,661	1,521	2,444	2,147	1,918	2,599	1,410	2,394	1,458	1,941
BOT004	4,323	4,855	2,691	5,938	2,260	1,969	1,692	1,022	1,536	980	2,727
BOT006	846	1,379	1,597	1,934	2,720	2,043	2,476	1,334	1,938	1,866	1,813
BOT009	722	685	1,087	1,272	1,072	1,382	1,203	696	1,107	1,124	1,035
BOT010	N/A	N/A	N/A	N/A	N/A	3,162	3,485	1,600	3,112	2,503	2,772
BOT011	692	1,986	983	1,936	1,973	2,137	2,947	1,109	1,853	1,132	1,678
BOT012	432	1,505	805	1,680	1,718	1,684	2,501	663	1,569	836	1,340
BOT013	944	1,700	2,016	2,441	2,965	2,615	4,775	2,583	2,911	2,183	2,513
BOT014	1,105	1,805	2,041	2,352	1,411	1,712	1,286	759	951	855	1,427
BOT015	490	1,456	705	1,322	1,317	1,621	1,428	577	1,305	702	1,093
BOT016	646	946	890	1,113	1,112	1,214	1,257	N/A	1,208	915	1,034
BOT017	1,182	4,303	2,297	3,567	3,431	3,147	3,377	5,528	3,343	1,454	3,163
BOT018	4,137	7,337	64,615	6,252	4,151	7,400	6,587	2,981	4,878	4,024	5,236
Average	**1,309**	**2,408**	**1,922**	**2,971**	**2,434**	**2,332**	**3,190**	**2,098**	**2,648**	**1,897**	**2,334**

D/E – Data Excluded due to anomalous results.
N/A – Not available.

TABLE 4-3

Reconfigured Basin I/I Rates

Basin Name	Acres(1)	Peak I/I per Acre (gpad)(2)
BOT001	200	390
BOT002	105	7,643
BOT003	200	1,093
BOT004	196	1,941
BOT006	116	1,122
BOT009	276	425
BOT010	137	1,066
BOT011	140	1,468
BOT012	146	970
BOT013	166	1,721
BOT014	177	655
BOT015	148	809
BOT016	91	911
BOT017	206	1,120
BOT018	227	1,046
Average(3)		**1,301**

(1) Reconfigured Basin Area.
(2) I/I Value based on reconfigured basin area.
(3) Weighted Average based on area.

SUMMARY OF WASTEWATER FLOW DESIGN CRITERIA

The wastewater flow design criteria for the City is summarized in Table 4-4. The table contains calculated values for the total flow generated in the City based on developed land area and population projections. Buildout is assumed to occur in 2064 based on the residential growth rate of 1.0 percent and the employee growth rate of approximately 1.1 percent. Sewered area is developed based a GIS analysis of the area currently served with sewers and projected to the entire study area by buildout. I/I is held at a constant 1,301gpad through buildout.

TABLE 4-4

Summary of Wastewater Design Criteria

Design Criteria	2016	2022	2036	Buildout(1)
Residential Population	22,155	23,541	27,121	36,055
Per Capita Domestic Flow (gpcd)	50	50	50	50
Residential Domestic Flow (gpd)	1,107,774	1,177,060	1,356,053	1,802,746
Employee Population(2)	12,146	12,991	15,198	20,801
Per Capita Employee Flow (gpcd)	30	30	30	30
Employee Domestic Flow (gpd)	364,391	389,738	455,952	624,037
Student Population	5,051	5,367	6,183	8,206
Per Capita Student Flow (gpcd)	16	16	16	16
Student Domestic Flow (gpd)	80,813	85,868	98,925	131,299
Total Average Domestic Flow (gpd)	1,552,978	1,652,666	1,910,930	2,558,082
Domestic Peaking Factor(3)	1.74	1.74	1.74	1.74
Peak Domestic Flow (gpd)	2,702,182	2,875,640	3,325,018	4,451,062
Sewered Area (acres)(4)	2,363	2,538	2,947	3,765
Infiltration and Inflow (gpad)	1,301	1,301	1,301	1,301
Infiltration and Inflow (gpd)	3,074,263	3,302,263	3,834,264	4,898,265
Peak Wet Weather Flow (gpd)(5)	5,776,445	6,177,903	7,159,282	9,349,327

(1) Buildout population assumed to occur in 2064 based on rate of 1.0 percent for residential population and 1.1 percent for employee population.
(2) Employee population includes student population for the University of Washington Bothell Campus (UW/Cascadia).
(3) A domestic peaking factor of 1.74 was used per Figure 4-1.
(4) Developed based on a GIS analysis of the area currently served with sewers and projected to the entire study area by buildout.
(5) Peak Wet Weather Flow is the sum of Peak Domestic Flow and Infiltration and Inflow.

CHAPTER 5

EXISTING FACILITIES

INTRODUCTION

The City's original wastewater collection system was constructed in 1960 with the formation of a Local Improvement District. Additional sewer facilities have been constructed within the City over the past 40 plus years.

REGIONAL SEWER SYSTEM

All of the wastewater collected in the City flows to the King County Department of Natural Resources' (KCDNR) wastewater treatment facilities, located south west in the City of Seattle (West Point Treatment Plant), north east of the City in unincorporated Snohomish County (Brightwater Treatment Plant), and south in the City of Renton (South Treatment Plant). The City has 12 connections to KCDNR sewer interceptors that convey the wastewater to the KCDNR treatment facilities. The regional sewer map, which includes KCDNR's treatment facilities is shown in Figure 5-1. A copy of the KCDNR agreement is located in Appendix A.

EXISTING WASTEWATER COLLECTION SYSTEM

The City's wastewater collection system consists of four sewage lift stations, approximately 1,900 linear feet of force main, and 69 miles of gravity sewer line.

DRAINAGE BASINS

The City has 19 sewer basins designated within its collection system. These basins either drain directly to KCDNR interceptors or drain to lift stations that pump to the KCDNR interceptors. The 19 sewer basins are shown in Figure 5-2.

SEWAGE LIFT STATIONS

An inventory of the City's sewage lift stations is presented in Table 5-1. Lift station locations are shown in Figure 5-2. A schematic representation of the City's lift stations and force mains is shown in Figure 5-3. Each lift station is described in the subsequent sections.

Lift Station 1

Also known as the Valhalla Lift Station, Lift Station 1 serves the Waynita Basin, which consists of the area near Waynita Drive to the south of the Sammamish River. Lift

Station 1 is equipped with two 10.0 horsepower, 543-gpm pumps, one 15 horsepower, 412 gpm pump in a bypass vault, and a permanent 50 kW generator with automatic transfer switch. Lift Station 1 was upgraded in 2008.

Lift Station 2

Also known as the Feedmill Lift Station, Lift Station 2 serves the Norway Hill Basin, which consists of a portion of Norway Hill to the south of the Sammamish River. Lift Station 2 is equipped with two 15.0 horsepower, 571-gpm pumps and a permanent 35 kW generator with automatic transfer switch. Lift Station 2 was upgraded in 2014.

Lift Station 3

Also known as the Bothell Station Lift Station, Lift Station 3 serves the Cedar Park Basin, which consists of a portion of Norway Hill to the south of the Sammamish River. Lift Station 2 is equipped with two 7.5 horsepower, 900-gpm pumps and a permanent 50 kW generator with automatic transfer switch. Lift Station 3 was upgraded in 2017.

Lift Station 4

Also known as the Camden Highlands Lift Station, Lift Station 4 serves the Camden Crest Basin, which consists of a development of approximately 23 homes just north of the King/Snohomish County border. Lift Station 4 is equipped with two 3.0 horsepower, 100-gpm pumps and a permanent 10 kW generator with manual transfer switch. Discussions about improvements to Lift Station 4 are included in Chapter 8, Capital Improvement Program.

ODOR CONTROL

Lift station and collection system design include considerations for odor control and odor is evaluated as part of regular lift station maintenance and operation. There are no current areas of concern with respect to odor control however, should odor control issues arise, future odor control issues will be evaluated on a case-by-case basis to determine mitigation and reduction approaches.

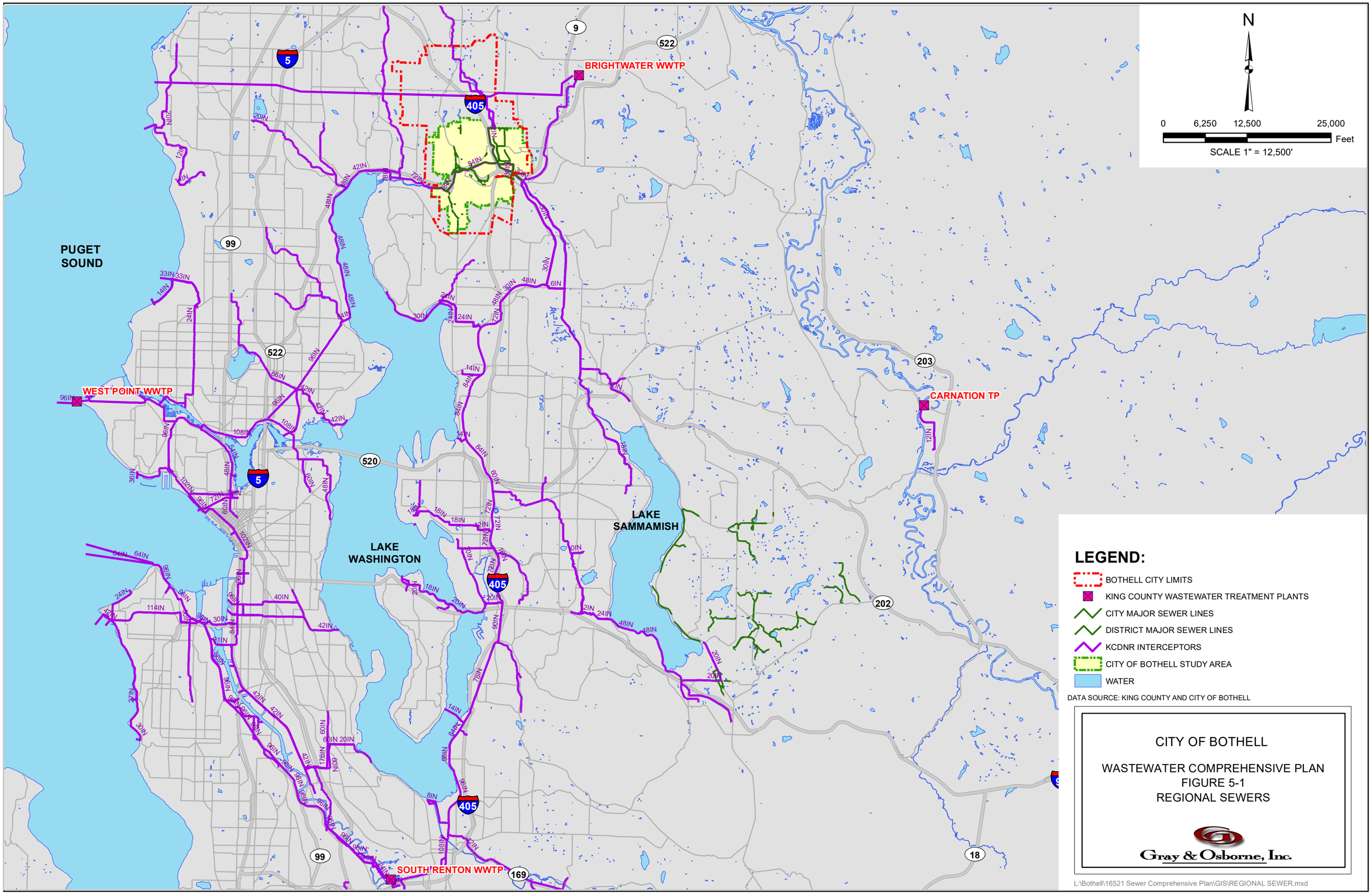
N
0
6,250
12,500
25,000
Feet
SCALE 1" = 12,500'
PUGET SOUND
LAKE WASHINGTON
LAKE SAMMAMISH
BRIGHTWATER WWTP
WEST POINT WWTP
CARNATION TP
SOUTH RENTON WWTP
LEGEND:
BOTHELL CITY LIMITS
KING COUNTY WASTEWATER TREATMENT PLANTS
CITY MAJOR SEWER LINES
DISTRICT MAJOR SEWER LINES
KCDNR INTERCEPTORS
CITY OF BOTHELL STUDY AREA
WATER
DATA SOURCE: KING COUNTY AND CITY OF BOTHELL
CITY OF BOTHELL
WASTEWATER COMPREHENSIVE PLAN
FIGURE 5-1
REGIONAL SEWERS
Gray & Osborne, Inc.
L:\Bothell\16521 Sewer Comprehensive Plan\GIS\REGIONAL SEWER.mxd

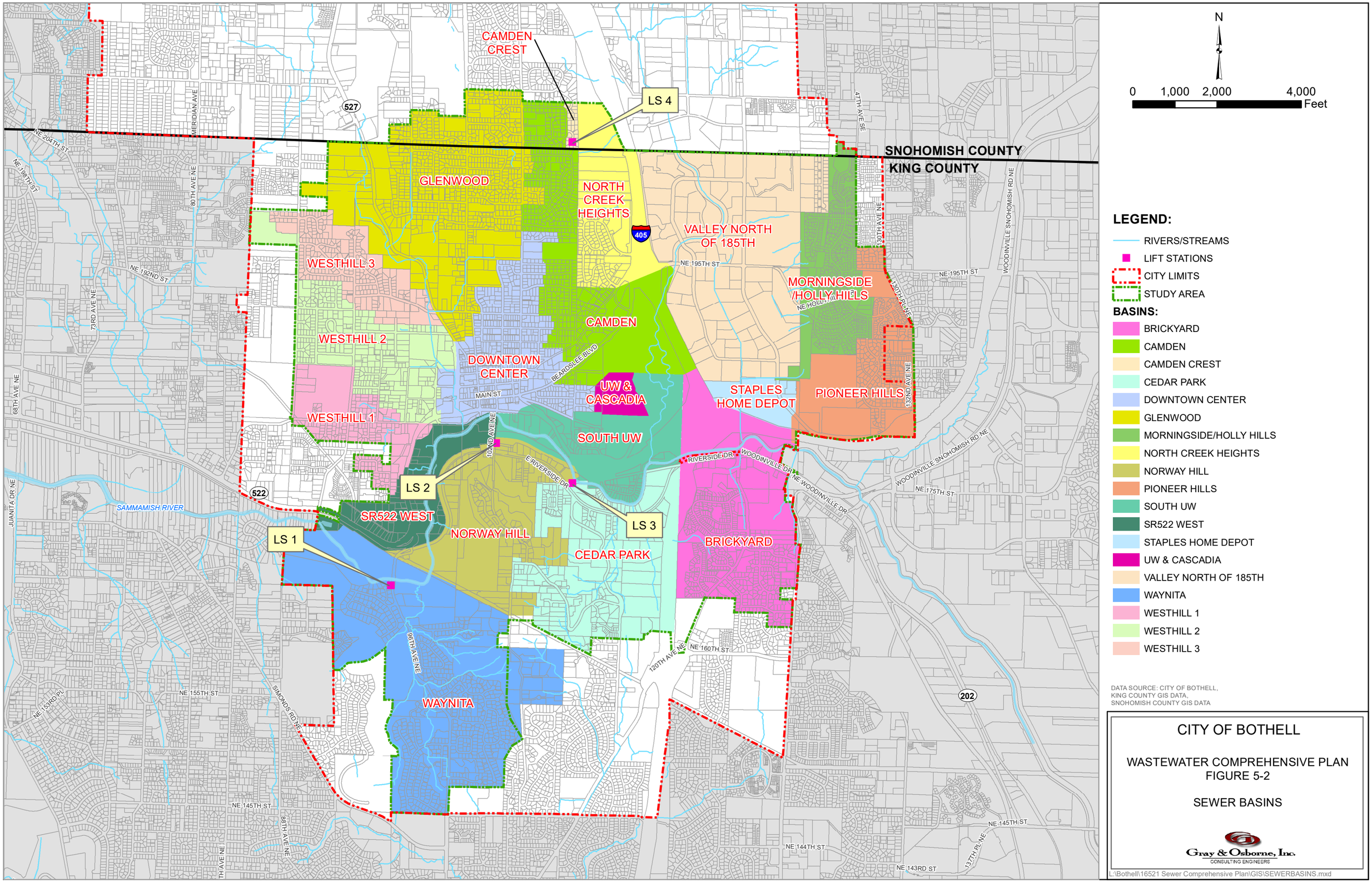
N
0 1,000 2,000 4,000
Feet
LEGEND:
RIVERS/STREAMS
LIFT STATIONS
CITY LIMITS
STUDY AREA
BASINS:
BRICKYARD
CAMDEN
CAMDEN CREST
CEDAR PARK
DOWNTOWN CENTER
GLENWOOD
MORNINGSIDE/HOLLY HILLS
NORTH CREEK HEIGHTS
NORWAY HILL
PIONEER HILLS
SOUTH UW
SR522 WEST
STAPLES HOME DEPOT
UW & CASCADIA
VALLEY NORTH OF 185TH
WAYNITA
WESTHILL 1
WESTHILL 2
WESTHILL 3
DATA SOURCE: CITY OF BOTHELL,
KING COUNTY GIS DATA,
SNOHOMISH COUNTY GIS DATA
CITY OF BOTHELL
WASTEWATER COMPREHENSIVE PLAN
FIGURE 5-2
SEWER BASINS
Gray & Osborne, Inc.
CONSULTING ENGINEERS
L:\Bothell\16521 Sewer Comprehensive Plan\GIS\SEWERBASINS.mxd
SNOHOMISH COUNTY
KING COUNTY
CAMDEN CREST
LS 1
LS 2
LS 3
LS 4
GLENWOOD
NORTH CREEK HEIGHTS
VALLEY NORTH OF 185TH
WESTHILL 3
WESTHILL 2
WESTHILL 1
CAMDEN
DOWNTOWN CENTER
UW & CASCADIA
STAPLES HOME DEPOT
PIONEER HILLS
MORNINGSIDE /HOLLY HILLS
SOUTH UW
SR522 WEST
NORWAY HILL
CEDAR PARK
BRICKYARD
WAYNITA
SAMMAMISH RIVER
NE 204TH ST
NE 198TH ST
NE 192ND ST
NE 195TH ST
NE 175TH ST
NE 160TH ST
NE 155TH ST
NE 145TH ST
NE 144TH ST
NE 143RD ST
MERIDIAN AVE
80TH AVE NE
73RD AVE NE
68TH AVE NE
JUANITA DR NE
47TH AVE SE
230TH AVE NE
197TH PL NE
132ND AVE NE
WOODINVILLE SNOHOMISH RD NE
WOODINVILLE DR
NE WOODINVILLE DR
RIVERSIDE DR
E RIVERSIDE DR
BEARDSLEE BLVD
MAIN ST
102ND AVE NE
96TH AVE NE
120TH AVE NE
SIMONDS RD NE
NE 153RD PL
88TH AVE NE
137TH PL NE
527
522
405
202

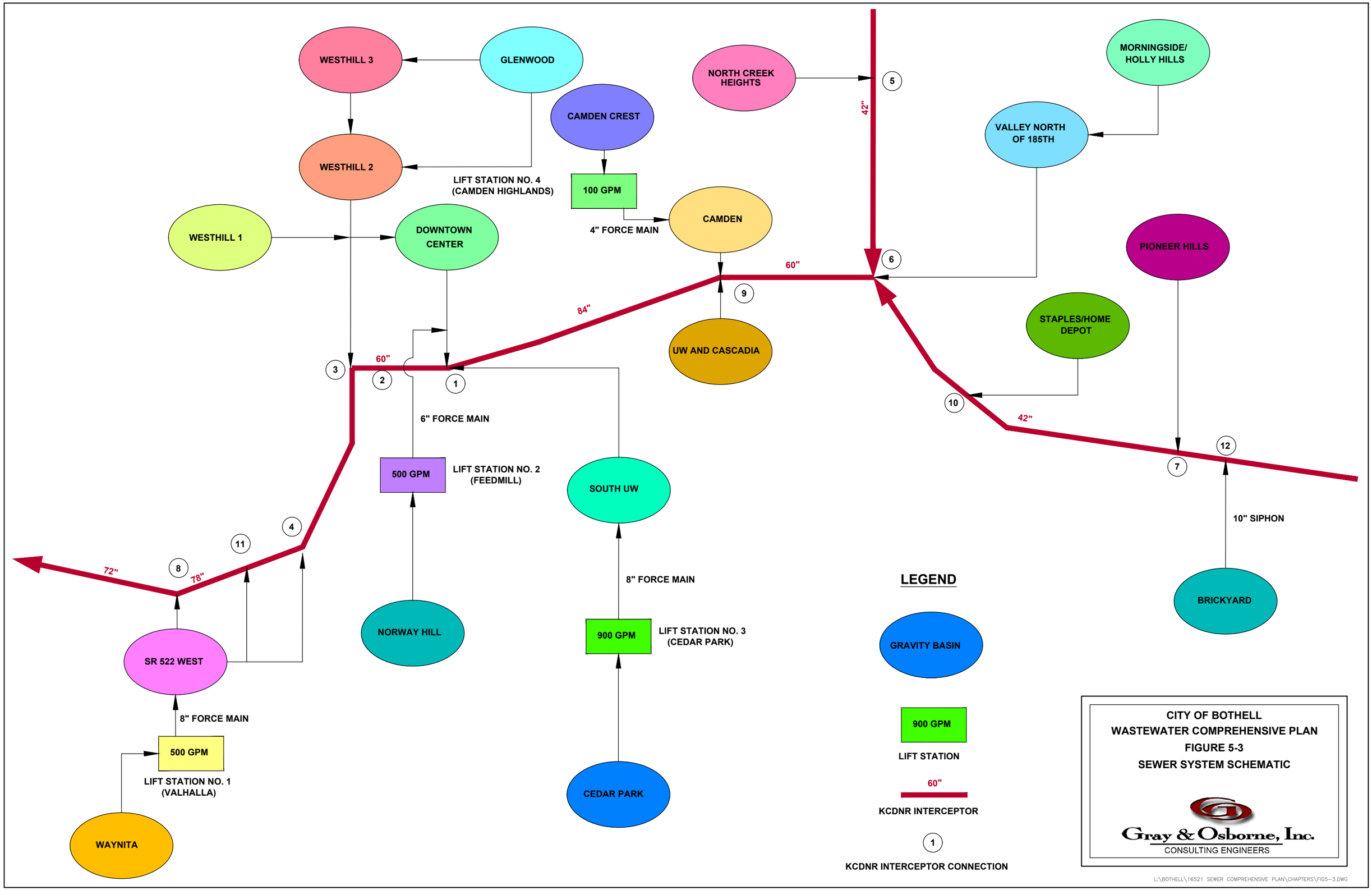
WESTHILL 3
GLENWOOD
NORTH CREEK HEIGHTS
MORNINGSIDE/ HOLLY HILLS
CAMDEN CREST
VALLEY NORTH OF 185TH
WESTHILL 2
LIFT STATION NO. 4 (CAMDEN HIGHLANDS)
100 GPM
CAMDEN
4" FORCE MAIN
WESTHILL 1
DOWNTOWN CENTER
PIONEER HILLS
STAPLES/HOME DEPOT
UW AND CASCADIA
6" FORCE MAIN
500 GPM
LIFT STATION NO. 2 (FEEDMILL)
SOUTH UW
8" FORCE MAIN
900 GPM
LIFT STATION NO. 3 (CEDAR PARK)
10" SIPHON
BRICKYARD
NORWAY HILL
SR 522 WEST
8" FORCE MAIN
500 GPM
LIFT STATION NO. 1 (VALHALLA)
WAYNITA
CEDAR PARK
42"
60"
84"
60"
42"
72"
78"
1
2
3
4
5
6
7
8
9
10
11
12
LEGEND
GRAVITY BASIN
900 GPM
LIFT STATION
60"
KCDNR INTERCEPTOR
1
KCDNR INTERCEPTOR CONNECTION
CITY OF BOTHELL
WASTEWATER COMPREHENSIVE PLAN
FIGURE 5-3
SEWER SYSTEM SCHEMATIC
Gray & Osborne, Inc.
CONSULTING ENGINEERS
L:\BOTHELL\16521 SEWER COMPREHENSIVE PLAN\CHAPTERS\FIG5-3.DWG

TABLE 5-1

Inventory of Sewage Lift Stations

Category	Lift Station 1		Lift Station 2	Lift Station 3	Lift Station 4
Site No.	42		43	44	45
Name	Valhalla		Feedmill	Bothell Station	Camden Highlands
Year On-line	2008		2014	2017	1984
Station Type	Submersible		Submersible	Submersible	Vacuum Lift
No. of Pumps	2	1 (bypass)	2	2	2
Pump Make	Flygt	Hydromatic	Flygt	Flygt	Cornell
Pump Model	NP 3127.090	40MPS	NP 3153.095	NP-3127.095-422	4NMTVMRH3-6
Capacity	543 gpm	412 gpm	571 gmp (each)	900 gpm	100 gpm
TDH	42.5	41 feet	63.5 feet	23 feet	12 feet
Impeller Size	202 mm		253 mm	7.4 inch	7.5 inch
Motor Power	10 hp	15 hp	15 hp	7.5 hp	3.0 hp
Motor Manufacturer	Flygt	General Electric	Flygt	Flygt	General Electric
Motor Model	21-12-4AL	5KR254CC205AP	N3153.091 21-15-4AA-W	N3127.095 21-12-4AL-W	5KC215DP7703
Generator Size	50kW		35 kW	50 kW	10 kW
Generator Make	Kohler		Cummins	Kohler	Onan
Transfer Switch	Automatic		Automatic	Automatic	Manual
Fuel Source	Diesel		Diesel	Diesel	Propane
Wet Well Diameter	72 inch	72 inch	144 inch	72 inch	60 inch
Wet Well Depth	18 feet	17 feet	17 feet	20 feet	20 feet

FORCE MAINS

An inventory of the City's force mains, sorted by pipe diameter, is presented in Table 5-2. The City's force mains consist of two 8-inch diameter force mains, a 6-inch force main and a 4-inch force main. The City also operates a 10-inch diameter siphon.

A summary of the force main for each sewage lift station is presented in Table 5-3. The length and capacity of each force main is provided in the table, with the capacity as calculated for a maximum velocity of 8 feet per second. The location of each force main is shown in Figure 5-4.

TABLE 5-2

Inventory of Force Mains(1)

Pipe Diameter	Length (LF)
8"	879
6"	808
4"	178
Total (LF)	**1,865**

TABLE 5-3

Inventory of Lift Station Force Mains and Siphons

Lift Station(1) (Force Main Source)	Diameter (inches)	Length (LF)	Capacity(2) (gpm)
Lift Station 1 (Valhalla)	8	465	1,253
Lift Station 2 (Norway Hill)	6	808	705
Lift Station 3 (Cedar Park)	8	414	1,253
Lift Station 4 (Camden East)	4	178	313
Brickyard Basin Siphon	10	286	1,958

(1) The location of each lift station, force main, and siphon is shown in Figure 5-4.
(2) Capacity based on velocity of 8 feet per second (8 fps).

GRAVITY LINES

An inventory of the City's gravity sewer lines, sorted by pipe diameter and pipe material, is presented in Table 5-4. The 6-inch and 8-inch gravity sewers collect sewage flows within residential areas. The gravity sewers larger than 8 inches typically collect sewage flows from smaller pipes and convey the flow to lift stations or larger interceptor lines. Gravity sewers by pipe diameter are presented in Figure 5-4.

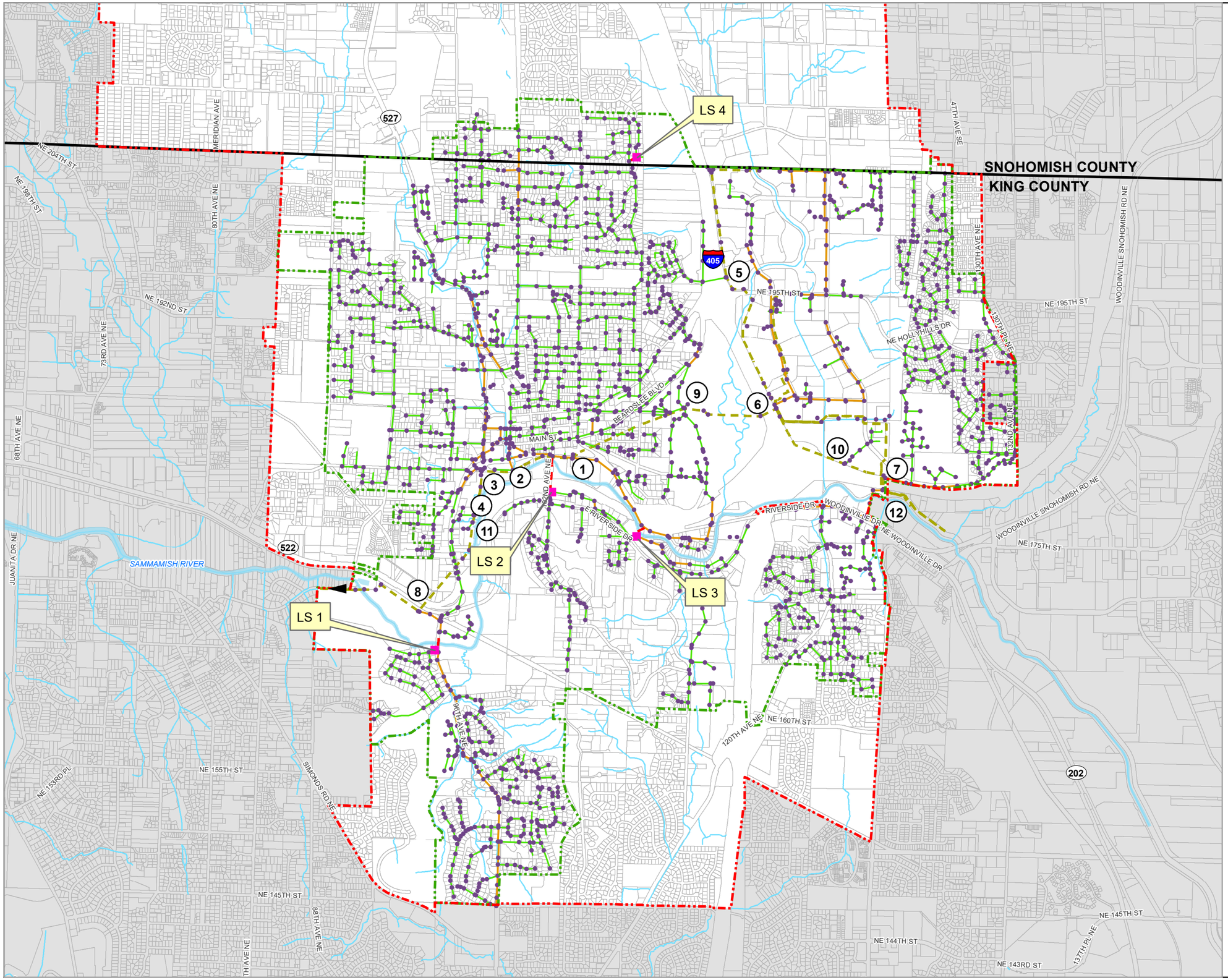

LEGEND:

- LIFT STATIONS
- MANHOLES
- RIVERS/STREAMS
- FORCE MAIN
- 8-INCH
- 10-INCH OR GREATER
- KCDNR INTERCEPTOR
- CITY LIMITS
- STUDY AREA
- (1) KCDNR INTERCEPTOR CONNECTION

DATA SOURCE: CITY OF BOTHELL,
KING COUNTY GIS DATA,
SNOHOMISH COUNTY GIS DATA

CITY OF BOTHELL

WASTEWATER COMPREHENSIVE PLAN
FIGURE 5-4

COLLECTION SYSTEM

Gray & Osborne, Inc.
CONSULTING ENGINEERS

L:\Bothell\16521 Sewer Comprehensive Plan\GIS\COLLECTIONSYSTEM.mxd

TABLE 5-4

Inventory of Gravity Lines

Pipe Size (inch)	AC	Concrete	Ductile Iron	HDPE	PVC	Steel	Unknown	Total (feet)	Total (miles)
Unknown	-	-	-	-	503	-	117	620	0.12
6	-	95	-	-	2,542	-	-	2,636	0.5
8	1,273	91,270	5,933	1,839	181,692	6,322	703	294,031	55.69
10	-	5,026	56	-	9,404	435	-	14,921	2.83
12	-	2,248	4,265	-	13,296	-	-	19,809	3.75
15	-	-	-	-	2,846	-	-	2,846	0.54
18		-	26		-		-	26	0
21	-	2,034	-	-	-	-	-	2,034	0.39
24	-	2,254	-	-	-	333	-	2,587	0.49
Total (feet)	1,273	102,926	10,280	1,839	215,283	7,090	820	339,510	64
Total (Miles)	0.24	19.49	1.95	0.35	40.77	1.34	0.16	64.3	-

TELEMETRY AND CONTROL

The City's telemetry system continuously monitors and historically tracks sewer system characteristics, provides on-call reporting and alarming, and controls a multitude of remote system components and appurtenances. Some of the characteristics that are monitored include wet well level, pump runtime, and alarm status. The system allows the City to efficiently monitor the operation of their facilities from the telemetry headquarters located at the City's Public Works Operations Center (21233 20th Avenue SE). The system has remote capabilities in which operators routinely remote access systems from almost any location via laptop, personal computers and telephone.

SCADA System

The wastewater utility has a Supervisory Control and Data Acquisition (SCADA) system with master control located at the City Shop. The system use Wonderware software to provide a graphical user interface allowing the operator to view and generate reports with the data collected from 23 remote sites, as well as providing the ability to implement and modify automated programmed control strategies.

The City's remote sites are equipped with Allen Bradley Compact Logix programmable logic controllers (PLCs) and Allen Bradley PanelView displays. Communication between the remote sites and the master control at the City Shop is cellular based.

The system displays enable the operators to monitor and report system conditions from data collected from 23 water and sewer RTU sites. The City monitors four lift station sites for wet well level, pump run time, pump status, intrusion alarms, pump fail, high level alarm, power failure, communications failure, generator run failure (when

applicable), automatic transfer switch failure (when applicable), phase failure, flood alarm, and smoke alarm.

DECANT FACILITY

The City's vactor decant and solids drying facility accepts the screening and settling of decanted liquids from stormwater and sanitary sewer facilities. The facility effectively removes the solids for landfill disposal before discharging the liquids to the sanitary sewer system. Table 5-5 describes the record parameters of the facility.

TABLE 5-5

Vactor Decant and Solids Drying Facility

Parameter	Size/Dimension/Standard/Comment
Address	17555 Brickyard Road NE
Year On-Line	2003
Station Type	Vactor Decant and Solids Drying
Maximum Liquid Storage Capacity	9,792 gallons
Maximum Detainable and Releasable Liquid Storage	7,270 gallons
Hours of Operation	Monday-Friday 7:30 a.m. – 4:00 p.m.
Decant Facility Area	520 ft^2
Drying Bin Area	800 ft^2
Discharge To	King County Sanitary Sewer System – West Point Treatment Plant

SEWER AGREEMENTS

The City does not own, operate, or maintain a wastewater treatment facility. All wastewater collected within the City is transported for treatment to King County via King County interceptors, as provided by the agreement between the City and King County. Interlocal sewer service agreements have been established with Northshore, AWWD, and WWD for areas within the City's sewer service area boundary that are served by adjacent districts, or for areas served by the City within adjacent district boundaries. Copies of the agreements are located in Appendix A.

KING COUNTY AGREEMENT

In 1961, the City entered into the existing sewer agreement with KCDNR, then known as the Municipality of Metropolitan Seattle, or Metro. The City and Metro signed amendments to the original 1961 agreement in 1964, 1982, and 1985, and 1992. The 1985 amendment extended the service agreement through 2036. The 1992 amendment

adjusted the definition of a wastewater ERU from 2,700 cubic feet per quarter to 2,250 cubic feet.

Based on the terms of the agreement, the City is billed quarterly by KCDNR based on the number of residential customers and the total water consumption for non-residential customers. Flow meters are not used to establish sewer flows for billing. Each residential customer is billed based on a quarterly sewer flow of 2,250 cubic feet, or approximately 184 gpd. According to the information provided in Chapter 4, the average residential customer within the City has an average residential flow of 115 gpd. The difference of approximately 69 gpd is attributed to I/I.

Non-single-family residential customers are billed based on metered water consumption, with subtractions made for irrigation use. The water use is then divided by 2,250 cubic feet to establish the ERU for these customers. The total ERU (residential plus non-residential) is then applied the 2,250 cubic feet per quarter charge, which is then passed on to the City.

There are no conditions to the agreement that limit the instantaneous or monthly amount of sewage transferred by the City to KCDNR.

The City currently has 12 connections to KCDNR sewer transmission interceptors. Table 5-6 provides a summary of the KCDNR sewer connections.

TABLE 5-6

KCDNR Interceptor Connections

KCDNR Connection No.(1)	Location	City Pipe Diameter (inch)	KCDNR Pipe Diameter (inch)
1	SR-522, East of 102nd Avenue NE	12/24	60
2	NE 180th Street and approximately 100th Avenue NE, south of SR 522	10	60
3	Intersection of NE 180th Street and 98th Avenue NE	8	60
4	East of SR 522 at NE 176th Street	8	60
5	North of 195th Street east of I-405	8	42
6	West of North Creek Parkway South at I-405	15	60/42/42
7	Intersection of SR-522 and 120th Avenue NE	12	42
8	North of Sammamish River and Vahalla Drive and east of 96th Avenue NE	12	72/78
9	East of terminus of NE 186th Street and west of North Creek	8	60/84

TABLE 5-6 – (continued)

KCDNR Interceptor Connections

KCDNR Connection No.(1)	Location	City Pipe Diameter (inch)	KCDNR Pipe Diameter (inch)
10	Intersection of SR-522 and I-405 (Serves Staples and Home Depot)	8	42
11	East of SR-522 at NE 175th Street	8	60
12	I-405 On-ramp and Sammamish River (Serves 10-inch Siphon)	10	42

(1) KCDNR Connection number corresponds to those shown on Figure 5-4.

CHAPTER 6

COLLECTION SYSTEM EVALUATION

INTRODUCTION

The components of the existing sewer collection system are evaluated based on the design criteria for wastewater flows in Chapter 4 and the City's future population and land use zoning in Chapter 2. The components of the City's sewer system are broken down into four categories for capacity evaluation:

- Wholesale Treatment and Transmission Capacity (Based on Agreements)
- Sewage Lift Stations
- Force Mains
- Major Gravity Lines

The capacity evaluation is performed by separating each system component and generating the Peak Wet Weather Flow (PWWF) from the contributing area as well as the number of units or connections. The hydraulic model software is used to develop total flows and to analyze the capacity of major gravity lines within the collection system.

HYDRAULIC MODEL

This chapter presents a hydraulic model of the City's collection system and explains the development of the hydraulic model and the assumptions included in the model. The output from this model is used to evaluate the capacity of the existing collection system and to identify improvements that will be necessary in the future. The model is intended to be updated and maintained periodically and used as a tool to aid in future planning and design efforts.

The model is developed with InfoSewer software (Version 7.6), by Innovyze, Inc. As InfoSewer is GIS-compatible, the hydraulic model can be integrated into the City's GIS system.

MODEL ELEMENTS

The hydraulic model uses a database that contains the location data for the sewer system elements (i.e., manholes, pipes, lift stations, and force mains) and hydrologic data including system loading, element sizes/diameters, pump flows, system controls, etc. Necessary data for the hydraulic model is described in Table 6-1.

TABLE 6-1

Collection System Information

Category	Gravity Sewers/Force Mains	Manholes	Pumps	Wet Wells
Identification No.	Name (from City, e.g., SM38-027)	Name (from City, e.g., MH 91012)	Lift Station Name	Lift Station Name
Location	Determined by upstream and downstream manholes	Location (X and Y coordinate, imported from GIS base map)(1)	Wet Well and Force Main Locations	Location (X and Y coordinate, imported from GIS base map)(1)
Elevations	Upstream and Downstream Invert Elevations(2)	Rim and Bottom Elevation(2)	--	Ground and Bottom Elevation(2)
Size	Pipe Diameter, Length (Calculated from X and Y coordinates of manholes and wet wells)	Manhole Diameter		Wet Well Diameter, Depth (calculated from ground and bottom elevations)
Flow Criteria	Pipe Roughness, Pipe Shape	Headloss	Pump Capacity	--
Other Information	Sewer Basin			

(1) The Horizontal Datum used is the Washington State Plane North (83 feet).
(2) The City's vertical datum is NAVD 88. The previous 2006 model was done in NGVD29 and converted to NAVD 88 to be consistent with the City's current datum.

Collection system information was obtained primarily from the previous hydraulic model which was based upon the City's GIS base map. Recent downtown development locations were updated within the model based upon as-builts provided by the City. Where invert elevations of manholes were missing, the invert elevations were linearly interpolated between known inverts. Where manhole rim elevations were unknown, LIDAR contours were used to estimate the ground elevation at the manhole locations.

For simplicity, all lift stations were modeled as constant-discharge pumps, so that the lift stations produce a constant discharge regardless of head conditions. Force mains are modeled but are analyzed outside of the model, based upon a comparison of lift station discharge and the capacity of the force main using the Hazen Williams Equation.

Modeled network data for sewer pipes and manholes is included in Appendix E.

FLOW DATA

The flows inserted into the model are based upon area, population, and infiltration and inflow. For modeling purposes, the City is divided into 17 basins and 134 subbasins.

Each subbasin has a domestic flow component and an I/I component based upon the population, the acreage and the I/I rate for the area within the subbasin. The flows within a subbasin are assigned to a single manhole in the model. The modeled subbasins are shown in Figure 6-1.

Population

A population projection for each model year is stored in Excel format, organized by parcel. Each of the parcels within the study area is assigned a residential, school, and/or employee population for the 2017, 2022, 2036 and Buildout scenarios. Each parcel in the study area is further categorized as currently serviced or unserviced in the existing scenario. The population is organized in this manner for flexibility in distributing populations to different subbasins for adding proposed developments to the model in the future.

Existing Population Estimate

The existing population is based upon City population data where 2.3 persons per household was distributed to single family residential areas. Multi-family residential population is distributed by parcel, using City records to identify multi-family locations and the number of units per development. Existing employee population is distributed on an employee per area basis across commercial areas, with the exception of the University of Washington Campus, which has a student and employee count of 5,327. School populations are placed at their respective locations.

2022 and 2036 Population Projections

The year 2022 and 2036 residential populations are based on City estimates as shown in Table 4-4. To distribute the population in the model, recent and proposed developments are added to their appropriate parcels in the GIS system. Employee populations are increased linearly at their existing locations to represent an increase in building heights and increased employee densities in commercially zoned areas. School populations are increased linearly to reflect the increased City density.

Buildout Population Projection

The buildout population distribution is based upon zoning and the buildout population described in Chapter 2. To distribute the buildout population in GIS, each parcel is assigned a population based on the zoning of the parcel and the area of the parcel.

Population projections for each basin are summarized in Table 6-2.

TABLE 6-2

Projected Population by Basin

Basin Name	No. of Subbasins	Residential Populations				Employee Populations				School Populations			
		2017	2022	2036	Buildout	2017	2022	2036	Buildout	2017	2022	2036	Buildout
Brickyard	17	1,799	1,824	1,905	2,130	220	297	434	541	-	-	-	0
Camden	17	2,576	2,590	2,658	2,840	102	126	176	220	760	761	761	1,234
Cedar Park	2	812	969	1,319	2,180	140	143	179	224	1,300	1,300	1,300	1,395
Downtown	25	2,281	2,346	2,529	2,995	487	585	790	986	-	-	-	-
Glenwood	15	2,262	2,337	2,565	3,143	172	181	233	290	720	721	721	1,090
Morning Side	8	1,148	1,159	1,187	1,274	37	38	48	59	-	-	-	-
North Creek	1	260	368	594	1,136	-	-	-	-	-	-	-	-
Norway Hill	3	1,588	1,789	2,243	3,394	215	219	275	344	-	-	-	-
Pioneer Hill	11	2,778	2,782	2,792	2,816	-	-	-	-	681	682	894	1,125
S UW	3	783	794	834	938	5,327	5,650	5,669	8,908	-	-	-	-
SR 522 West	1	256	297	392	629	175	226	327	409	-	-	-	-
Staples Home Dep	1	-	-	-	-	375	382	479	598	-	-	-	-
Valley North 185th	9	420	267	650	1,569	3,633	3,698	4,647	5,799	-	-	-	-
Waynita	7	1,858	2,064	2,543	3,732	699	711	894	1,116	-	-	-	-
Westhill B	6	1,366	1,455	1,703	2,323	256	309	428	534	-	-	-	-
Westhill C	5	1,353	1,635	2,253	3,744	218	291	422	527	-	-	-	-
Totals	**134**	**22,375**	**23,541**	**27,310**	**36,055**	**12,146**	**12,991**	**15,198**	**20,801**	**5,361**	**5,367**	**6,183**	**8,206**

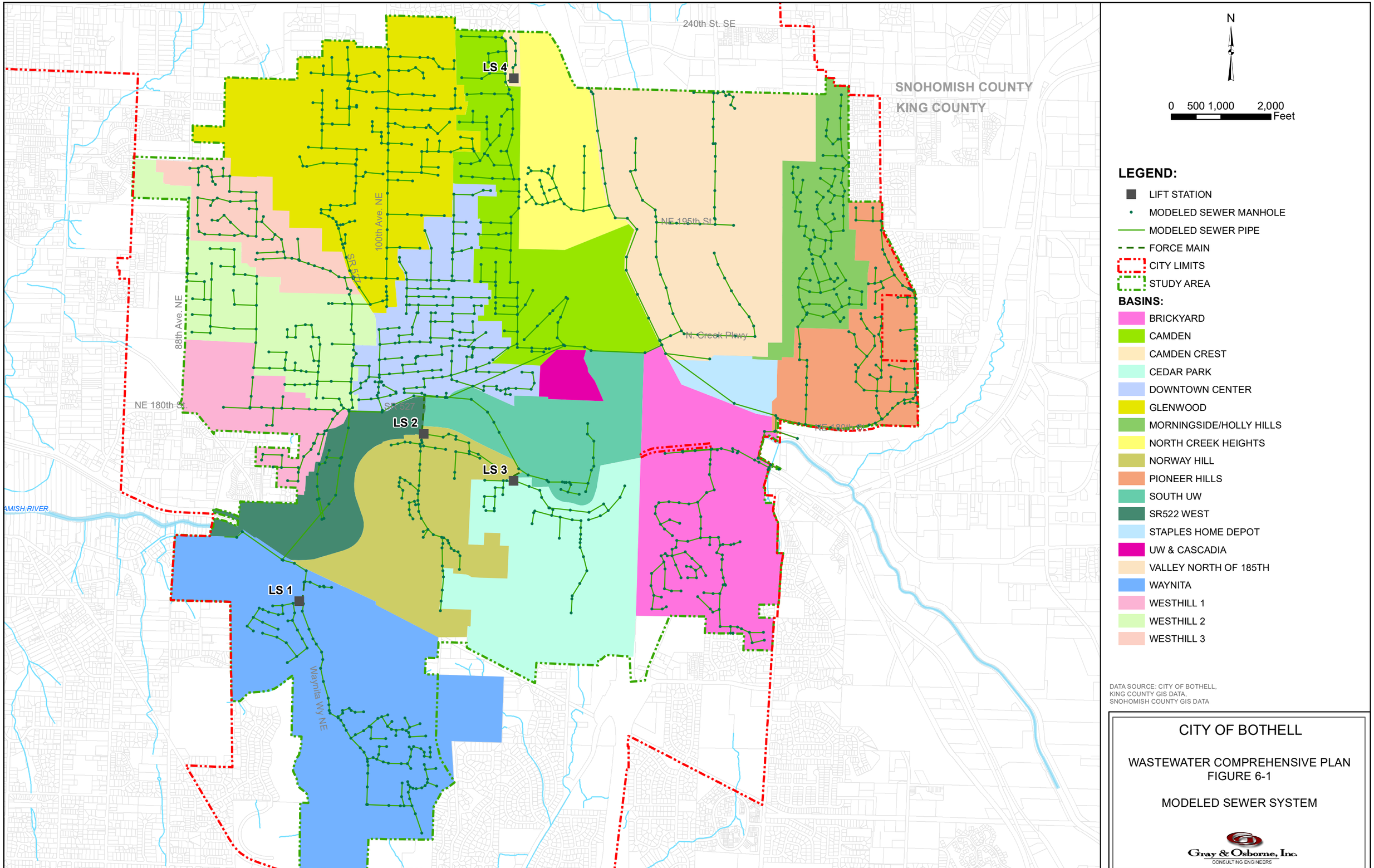

L:\Bothell\16521 Sewer Comprehensive Plan\GIS\Fig 6-1 Modeled Sewer System.mxd

Infiltration and Inflow

Each subbasin is assigned an infiltration and inflow value that is based on the KCDNR 2001/2002 Wet Weather Flow Monitoring Report. For existing subbasins, the I/I value is based on the KCDNR flow data for the basin that it resides in.

Future I/I flows are based on an ultimate buildout I/I value of 1,100 gpad. Each subbasin is assumed to have an ultimate I/I value of 1,100 gpad at buildout. Developments with I/I values less than 1,100 gpad utilize the existing value through the 2022 and 2036 scenarios and use a value of 1,100 gpad at buildout. For basins that exceed 1,100 gpad, the existing flow value was applied to determine the impact to the system, but I/I reduction projects will be included in the 6-year capital improvement plan to reduce flows in the basin to below 1,100 gpad. The I/I for each basin throughout each scenario is summarized in Table 6-3.

TABLE 6-3

Projected Infiltration and Inflow by Basin

Sewer Basin	KCDNR Basin Name	No. of Subbasins	Area(3) (acre)	I/I (gpad)			
				2017	2022	2036	Buildout
Brickyard(1)	BOT004	17	165	1,941	1,941	1,941	1,941
Camden	BOT016	17	149	911	911	911	1,100
Cedar Park(1)	BOT017	2	157	1,120	1,120	1,120	1,120
Downtown(1)	BOT011	25	154	1,468	1,468	1,468	1,468
Glenwood	BOT015	15	252	809	809	809	1,100
Morning Side(1)	(2)	8	71	1,301	1,301	1,301	1,301
North Creek(1)	(2)	1	67	1,301	1,301	1,301	1,301
Norway Hill	BOT003	3	218	1,093	1,093	1,093	1,100
Pioneer Hill(1)	(2)	11	128	1,301	1,301	1,301	1,301
S UW(1)	BOT017	3	169	1,120	1,120	1,120	1,120
SR522 West(1)	BOT002	1	55	7,643	7,643	7,643	7,643
Staples Home Depot(1)	(2)	1	35	1,301	1,301	1,301	1,301
Valley North 185th	BOT009	9	386	425	425	425	1,100
Waynita	BOT001	7	313	390	390	390	1,100
Westhill A(1)		2	91	1,301	1,301	1,301	1,301
Westhill B	BOT012	6	136	970	970	970	1,100
Westhill C(1)	BOT013	5	179	1,721	1,721	1,721	1,721

(1) Exceeds Maximum Allowable I/I rate of 1,100 gpad established by KCDNR.
(2) Used the average I/I value between all KCDNR basins (1,300 gpad).
(3) Represents "buildout" area.

HYDRAULIC MODELING ANALYSIS

YEAR 2017 THROUGH 2036 FLOWS

The 2017, 2022, and 2036 flows were run in separate scenarios to determine the capacity of the City's existing sewer mains. The results of the model were identical between all three scenarios in terms of which pipes were shown to be at capacity. The six deficient pipes shown within the model are described in Table 6-4. Figure 6-2 illustrates the problem areas identified by the model and potential solutions to each.

BUILDOUT FLOWS

Based on the hydraulic model, the system is anticipated to have an additional five pipe capacity issues in the Buildout scenario beyond those modeled in the previous scenarios. The details of the model results and potential solutions are provided in Table 6-4. Figure 6-2 illustrates the problem areas identified by the model for the buildout scenario.

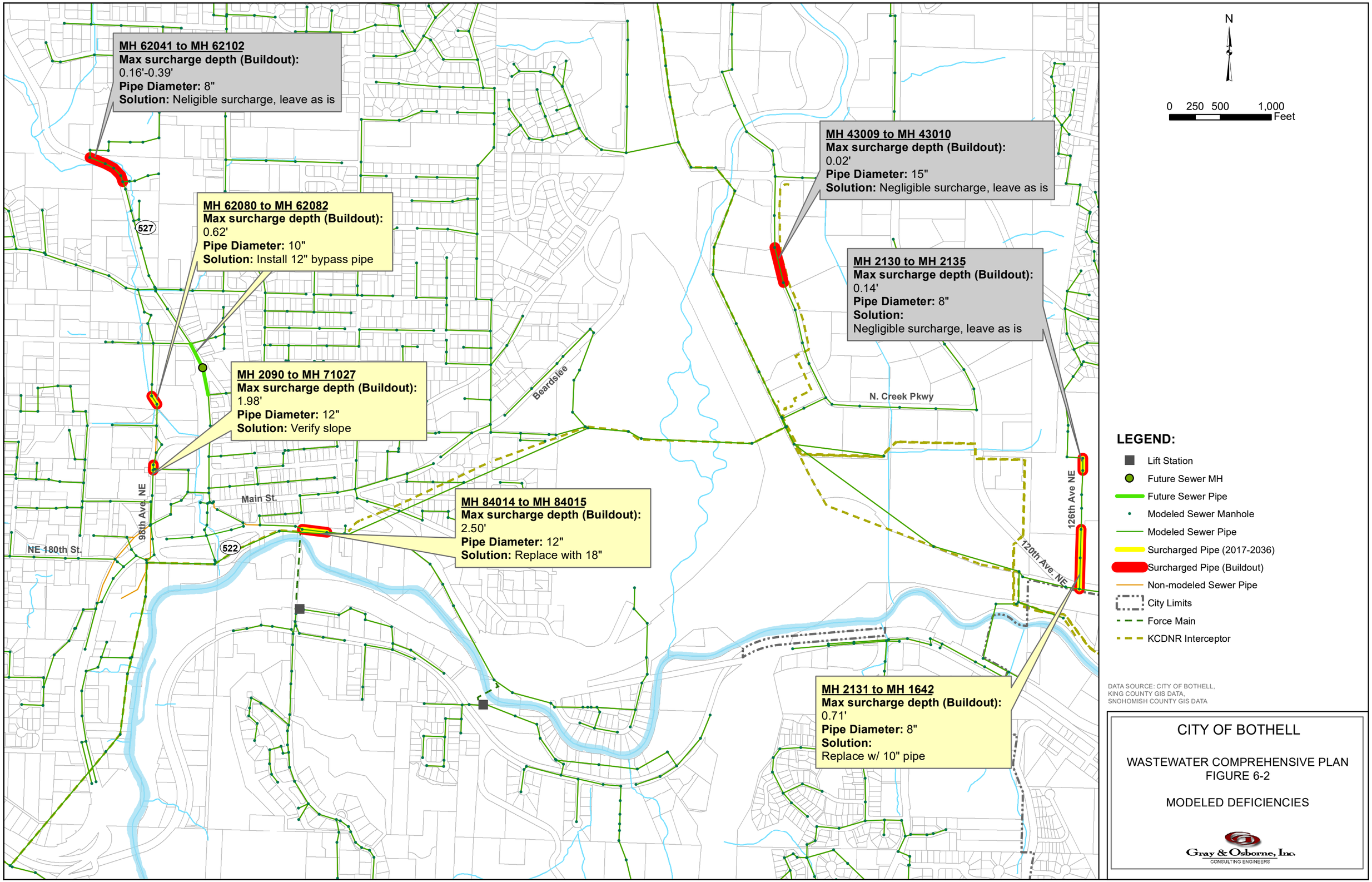

L:\Bothell\16521 Sewer Comprehensive Plan\GIS\Fig 6-2 Model deficiencies.mxd

TABLE 6-4

Sewer Model Results

Modeled Pipe ID	Pipe Diam. (in.)	Basin	Street Location	Upstream MH	Upstream Surcharge in Buildout (ft)	Modeled Flow (gpm)				Pipe Capacity (gpm)	% Full in Buildout	Potential Solution
						2017	2022	2036	Buildout			
Pipe Deficiencies in 2017-2036												
62080TO62082	10	Westhill B	North of NE 185th Street/ 98th Avenue NE	62080	0.62	519	594	666	907	197	460%	Replace with 18-inch pipe at same slope *(or replace two pipe segments from MH 62079 to 62082 with 12-inch at a slope of 0.0056)*
2131TO2132	8	Pioneer Hills	126th Avenue NE near NE 181st Street	2131	0.71	304	311	317	339	243	140%	Replace with 10-inch pipe
2132TO1642	8	Pioneer Hills	126th Avenue NE/SR 522	2132	0.44	304	311	317	339	243	140%	Replace with 10-inch pipe
2130TO2135	8	Pioneer Hills	126th Avenue NE near NE 185th Street	2130	0.14	304	311	317	339	297	114%	Negligible surcharge; no improvement recommended.
84014TO84015	12	Downtown	SR 522 near 102nd Avenue NE	84014	2.50	647	649	653	660	506	130%	Replace with 18-inch pipe
Pipes w/ Adverse (negative) Slopes												
2090TO71027	12	Westhill B	98th Avenue NE near NE 183rd Street	2090	1.98	519	594	666	907	--	--	Verify slope
Additional Pipe Deficiencies in Buildout												
62038TO62102	8	Glenwood	SR 527 near NE 195th Circle	62038	0.16	150	193	240	396	297	133%	Negligible surcharge and deep manholes; No improvement is recommended

TABLE 6-4 – (continued)

Sewer Model Results

Modeled Pipe ID	Pipe Diam. (in.)	Basin	Street Location	Upstream MH	Upstream Surcharge in Buildout (ft)	Modeled Flow (gpm)				Pipe Capacity (gpm)	% Full in Buildout	Potential Solution
						2017	2022	2036	Buildout			
62039TO62038	8	Glenwood	SR 527 near NE 195th Circle	62039	0.29	150	193	240	396	343	115%	Negligible surcharge and deep manholes; No improvement is recommended
62040TO62039	8	Glenwood	SR 527 near NE 195th Circle	62040	0.39	150	193	240	396	343	115%	Negligible surcharge and deep manholes; No improvement is recommended
62041TO62040	8	Glenwood	SR 527 near NE 195th Circle	62041	0.18	150	193	240	396	297	133%	Negligible surcharge and deep manholes; No improvement is recommended
43009TO43010	15	Valley North 185th	North Creek Pkwy (South of NE 195th Street)	43009	0.02	185	197	225	412	54	763%	Negligible surcharge; No improvement is recommended.

SEWAGE LIFT STATION CAPACITY EVALUATION

The existing sewage lift stations, including pumping capacities, are summarized in Chapter 5. The capacity evaluation of these stations is conducted by establishing the future contributing area to each existing lift station and then calculating the anticipated flow for each of these areas based upon land use. The anticipated incoming flow to the lift station is then compared to the pump capacity of the lift station itself. It should be noted that the hydraulic model allows attenuation of flows throughout the pipe network which slightly minimizes peak flows to the lift station.

The results of the sewage lift station capacity evaluation are presented in Table 6-5.

TABLE 6-5

Lift Station Capacity Evaluation Summary

Lift Station	Existing Capacity (gpm)	Peak Wastewater Flow (gpm)			
		2017	2022	2036	Buildout
Lift Station 1	543	194	224	263	504
Lift Station 2	571	159	238	280	383
Lift Station 3	900	136	185	216	289
Lift Station 4	100	5	5	(1)	(1)

(1) The City plans to abandon Lift Station 4 through a Capital Improvement Project that will allow service of the Camden Crest basin via gravity.

The results presented in Table 6-5 indicate that none of the City's lift stations will exceed their existing capacity within the 20-year planning period. All lift stations should be able to provide the required buildout flow provided that I/I rates are at or below the KCDNR requirement of 1,100 gpad. The City plans to abandon Lift Station 4 within the 6-year planning period through a gravity capital project.

FORCE MAIN AND SIPHON CAPACITY EVALUATION

The capacity evaluation for the City's force mains is tied directly to the lift station capacity evaluation. Since none of the lift stations have existing capacity issues, and none are anticipated to have capacity issues within the 20-year planning period, there are no capacity issues with any of the City's force mains.

The hydraulic model does not show a capacity problem in any of the planning periods modeled. However, it is critical that the City flush the siphon on an annual to semi-annual basis to prevent blockages that could limit the capacity of the siphon.

CAPACITY EVALUATION SUMMARY

The capacity evaluations of the City's gravity system, lift stations and force mains indicate that there are currently no lift station or force main deficiencies within the City's system. Although there are currently only six modeled gravity system capacity issues within the collection system, and an additional five modeled gravity system capacity issues anticipated during buildout, it is important to note that this condition is predicated by the City's ability to prevent increases in I/I in such basins as the Brickyard, Cedar Park, Downtown, Morningside, North Creek, Pioneer Hill, SR 522 West, Staples/Home Depot, and Westhill Basins. A summary of the significant modeled gravity system deficiencies (i.e., surcharge was greater than 0.5') is presented in Table 6-6. The locations are shown in Figure 6-2.

TABLE 6-6

Sewer Collection System Improvements

Location	From Manhole	To Manhole	New Diameter (inch)	Length (LF)
North of NE 185th Street/98th Avenue NE	62080	62082	18	94
126th Avenue NE near NE 181st Street	2131 2132	2132 1642	10 10	283 307
SR 522 near 102nd Avenue NE	84014	84015	18	246

COLLECTION SYSTEM CONDITION ASSESMENT

The City regularly television inspects segments of the City's sewer system as part of the ongoing maintenance program. Television inspection can identify problems such as joint separation, sagging lines, cracked lines, and root intrusion. Projects to correct these condition deficiencies are described in greater detail in Chapter 8. The City has identified the following areas of the sewer system with condition deficiencies.

- Approximately 350 LF of 10-inch sewer on 100th Avenue NE from NE 202nd Street to NE 201st Street.

- Approximately 450 LF of 21-inch sewer main on NE 175th Street from 113th Avenue NE to 11th Avenue NE.

- Approximately 450 LF of 8-inch sewer main on NE 189th Street and 101st Place NE.

- Approximately 200 LF of 8-inch sewer main on 101st Place NE from NE 187th Street to NE 188th Street.
- Approximately 200 LF of 8-inch sewer main between 18309 96th Avenue NE and 18306 96th Avenue NE.
- Approximately 1,300 LF of 8-inch sewer main on 96th Avenue NE from NE 185th to Main Street.
- Approximately 600 LF of 8-inch sewer main on 94th Avenue NE from NE 194th Place to NE 183rd Street.
- Approximately 1,500 lf of 8-inch sewer main from 10516 East Riverside Drive to Lift Station 2.

CHAPTER 7

OPERATION AND MAINTENANCE PROGRAM

INTRODUCTION

This Chapter summarizes the operation and maintenance programs maintained by the City of Bothell to ensure performance and reliability of the wastewater collection system. The City operates and maintains four lift stations, approximately 1,900 linear feet of force main, and over 69 miles of gravity lines. The City does not own wastewater treatment facilities. All wastewater collected within the City is conveyed to the King County Department of Natural Resources (KCDNR) wastewater treatment facilities via 12 connections to KCDNR sewer interceptors.

WASTEWATER SYSTEM ORGANIZATION

The City of Bothell is a council-managed, first-class City, governed by seven elected City council members. The operation and maintenance of the wastewater system is performed by the Public Works Department. A complete organizational chart for the Public Works Department is presented in Figure 7-1. This chart illustrates the specific personnel positions.

Routine wastewater utility work and assignments include, at a minimum, the following tasks:

- Side sewer replacement and repair
- Sewer gravity main inspections and repair
- Wet well maintenance and repair
- Pump station maintenance and repair
- Gravity manhole inspection and repair

OPERATOR CERTIFICATION

There are currently no Washington State certification requirements for wastewater collection system operators. Although not required, sewer collection system operational staff are given training opportunities and have received certification from the Washington Wastewater Collection Personnel Association for a number of collection system activities. As of May 2017, three City employees currently hold a level of Wastewater Collection Specialist I (WWC-1). Two employees hold a level of Wastewater Collection Specialist II (WWC-2) and three employees hold a level of Wastewater Collection Specialist III (WWC-3). While not required by Washington State, the City encourages continuing education and training of its staff.

SYSTEM OPERATION AND CONTROL

The locations of the major system components are shown on Figure 5-4. A description of the normal operation of each facility is given in Chapter 5.

SCADA SYSTEM

The wastewater utility has a Supervisory Control and Data Acquisition (SCADA) system with master control located at the City Shop. The system uses Wonderware software to provide a graphical user interface allowing the operator to view and generate reports with the data collected from 23 remote sites, as well as providing the ability to implement and modify automated programmed control strategies.

The City's remote sites are equipped with Allen Bradley Compact Logix programmable logic controllers (PLCs) and Allen Bradley PanelView displays. Communication between the remote sites and the master control at the City Shop is cellular based.

The SCADA system is also equipped with alarm software to allow staff to respond to conditions such as pump, motor, or power failures before a sewer spill occurs. Examples of the SCADA system's monitoring capabilities and alarms includes:

Monitoring Capabilities

- Pump run times
- Generator run
- Pump start/stop

Alarms

- Motion detector
- Intrusion
- High wet well
- Low wet well
- Pump fail
- Generator fail
- Power fail
- Communication fail
- Power restore
- Communication restore
- Operator in trouble panic button (dry well and above ground)
- Automatic transfer switch fail
- Phase fail

City of Bothell

CITY OF BOTHELL - PUBLIC WORKS DEPARTMENT

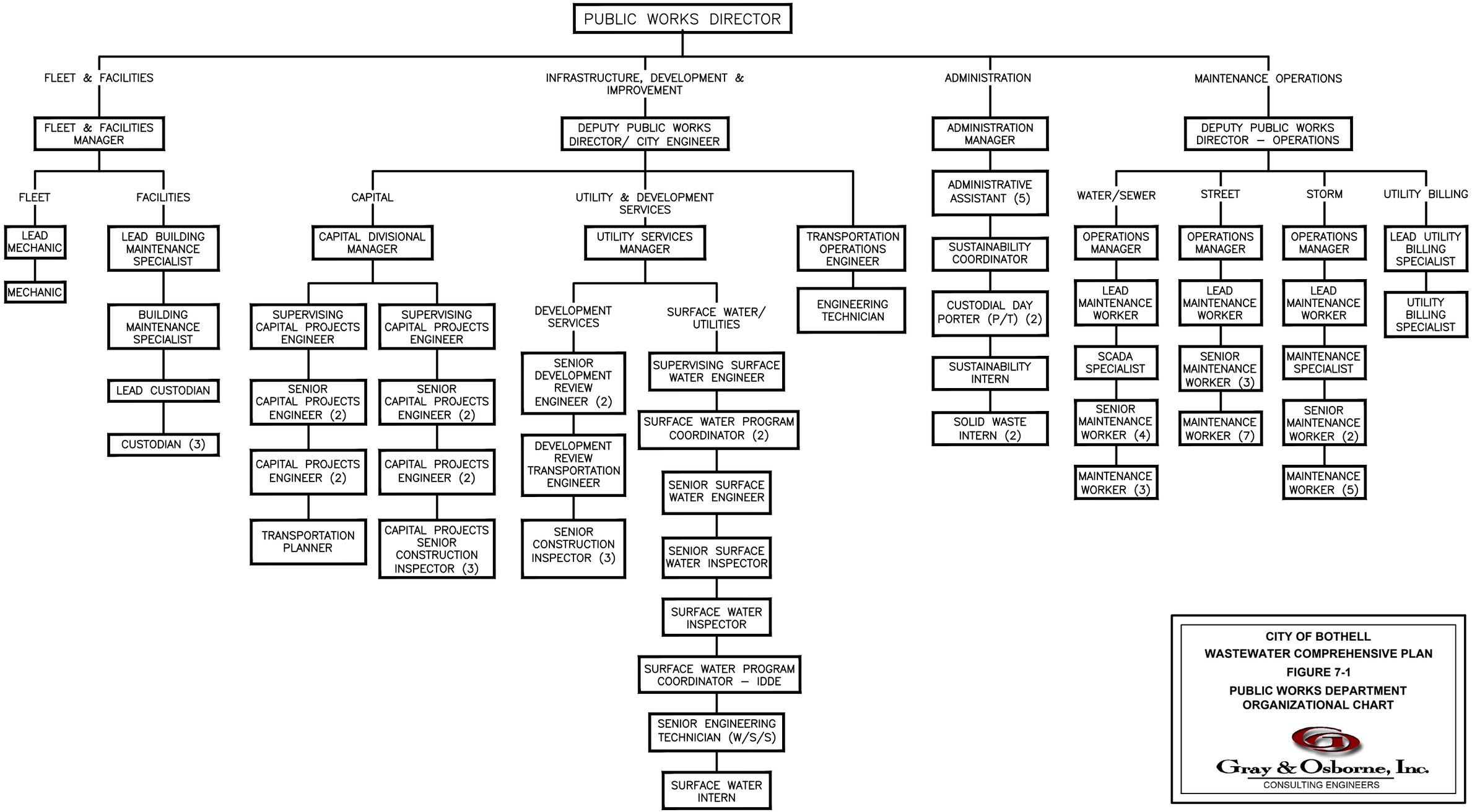

CITY OF BOTHELL
WASTEWATER COMPREHENSIVE PLAN
FIGURE 7-1
PUBLIC WORKS DEPARTMENT ORGANIZATIONAL CHART

Gray & Osborne, Inc.
CONSULTING ENGINEERS

L:\BOTHELL\16521 SEWER COMPREHENSIVE PLAN\CHAPTERS\FIG 7-1.DWG

PREVENTATIVE MAINTENANCE PROGRAM

Planning for present and future maintenance of the wastewater system facilities is an important task, as important as planning gravity sewer main extensions, lift stations, force mains and other physical improvements. The maintenance effort must be continuous in order for the City to continue to fulfill its role as a wastewater collector in the future.

The role of maintenance is to preserve the value of the physical infrastructure and ensure that the City can continue to provide a safe and reliable wastewater collection system. The most cost-effective method for maintaining a wastewater collection system is to provide a planned preventative maintenance (PM) program. Through a planned PM program, the optimum level of maintenance activities can be provided for the least total maintenance cost.

The City's PM program involves defining the tasks to be performed, scheduling the frequency of each task, and then providing necessary staff to perform the task. For large and complex wastewater collection systems, the administration, scheduling, and record keeping generated by the PM program may be the greatest challenge.

SCADA SYSTEM

The SCADA system is monitored continuously to ensure that the lift stations are operating correctly.

LIFT STATIONS

The City visits and inspects each lift station two times a week. The wet wells are degreased every 2 months and pumped out every 2 years. The lift stations also have a number of alarms that are linked to the City's SCADA system that alert staff if a problem is occurring at a lift station. These alarms include high wet well level alarms, intrusion alarms, pump fail alarms, and others.

FORCE MAINS/SIPONS

The force mains and siphons are cleaned as necessary. The City's force mains are designed to achieve scouring velocities that self-clean under normal system operation.

GRAVITY SEWER AND MANHOLES

Manholes are inspected every two to three years for corrosion, leaks and other potential signs of deterioration. Gravity lines are jetted once every 2 to 3 years to clear them of debris, settled solids, and grease buildup.

FATS, OILS AND GREASE PROGRAM

The City of Bothell's current Fats, Oils, and Grease (FOG) program consists of continuing education and outreach to customers, business owners and Home Owners Associations to promote reduction of FOG entering the collection system. A FOG ordinance to formalize the program will be presented to Bothell City Council for consideration in fall 2018.

EMERGENCY RESPONSE PROGRAM

Wastewater utilities have the responsibility to provide collection of wastewater in a reliable manner at all times. Therefore, utilities must reduce or eliminate the effects of natural disasters, accidents, and intentional acts.

EMERGENCY PROCEDURES

Though it is not possible to anticipate all potential disasters affecting the City's wastewater system, formulating procedures to manage and remedy several common emergencies is appropriate. The Emergency Operation Plan identifies the following key responsibilities for the Public Works Department concerning the wastewater collection system:

- Maintain operation of all the sewage lift stations.
- Determine that all the force mains and the siphon are discharging into their proper discharge manhole
- Check all the gravity lines on steep slopes.
- Sewer Overflow Response Plan (Appendix D)

Wastewater System Emergency Contact List

The City has an automatic phone dialer, which directs calls to staff at all times. The City designates a staff person who is responsible for off-hours calls and responds to SCADA alarms. Table 7-1 provides an emergency phone list, which is not comprehensive. The City also maintains a list of contact information for all field operations staff, available supplies, and emergency vendors and contractors.

TABLE 7-1

Emergency Phone List

Agency/Group	Phone Number
Fire/Police/After Hours Contact	911
Public Works Department	(425) 806-6800
Public Works Operations Center	(425) 488-0118
City Hall	(425) 806-6100
Snohomish County Health Department	(425) 339-5250 (daytime/weekdays)
King County Health Department	(206) 296-4600 (206) 296-4932 (emergency spill)
Washington State Department of Health Northwest Regional Office	(253) 395-6750 (daytime/weekdays) (800) 521-0323 (after hours/weekends)
Washington State Department of Ecology Northwest Regional Office	(425) 649-7000 (24-hour) (800) 258-5990 (emergency spill of oil or hazardous material)
Federal Bureau of Investigation	(206) 622-0460 (Seattle)
Gray & Osborne, Inc., Consulting Engineers	(206) 284-0860
Publish Oncall	(425) 471-2475

Power Failure

Various types of weather can cause loss of power, such as wind, lightning, freezing rain, and freezing snowstorms. In addition, power can be lost through traffic accidents. The City has a generator to maintain business functions and operation of the SCADA system master telemetry unit. The City has auxiliary power at all four of its stations to allow operation in the event of a power failure. The electrical service provider will be contacted to determine the length of the power outage. If an extended power outage is anticipated, customers will be notified of any anticipated problems that may occur.

Severe Earthquake

A severe earthquake can dramatically impact a collection system. Sewer pipes can be damaged, Table 7-2 presents potential effects of a severe earthquake on the wastewater system components.

TABLE 7-2

Emergency Response Procedures for an Earthquake

Wastewater System Component	Potential Effects	Recommended Actions
Lift Station	Loss of power for extended durations can cause station surcharge and backup into residential side sewers	Check telemetry and dispatch vactor truck and emergency fuel as necessary
Force Mains	Broken force main	Dispatch vactor truck and repair crew
Gravity Sewer and Manholes	Broken sewer pipe or manhole	Dispatch vactor truck and repair crew

SAFETY PROCEDURES

Work place hazards for this system are primarily limited to confined space entry, electrical equipment, health hazards associated with sewage, and traffic hazards associated with doing work in the right of way. Confined space issues are also a major concern for sewer collection system facilities, due to the potential for falls and the potential for lethal gasses in underground facilities such as manholes and wet wells.

Operator training is an important component in maintaining a safe and reliable wastewater collection system. At a minimum, all personnel performing wastewater system related duties receive training in the following areas:

- Confined space
- Trenching and shoring
- Traffic flagging
- First Aid

CUSTOMER COMPLAINT RESPONSE

The City maintains a log of public complaints with respect to the wastewater system. Depending on the nature of the complaint, a staff member may be contacted by portable radio or mobile phone to respond immediately if a public health issue is apparent. If not of immediate urgency, a work order will be completed and staff will respond as soon as feasible.

SEWER SYSTEM STAFFING REQUIREMENTS

Operating budgets must reflect adequate staffing levels needed to ensure an adequate level of service and maintain a reliable and dependable system. The costs of inadequate maintenance can result in the premature need for facility rehabilitation and reconstruction. Inadequate maintenance can also increase the likelihood for Sanitary Sewer Overflows (SSOs) through reduced conveyance capacities which can result in personal property damages, public health issues, and environmental damages. Maintenance management principles should be applied to determine maintenance frequencies and the levels of maintenance required to ensure reliability and low life-cycle cost. The future regulations being implemented through CMOM will further emphasize the need for adequate staffing to meet this performance criteria and reduce the likelihood of SSOs.

This section develops the recommended budget, staffing and equipment needs for City crews to inspect, maintain City wastewater facilities and perform the City's preventative maintenance program. The indirect costs for the management of the maintenance program are also an element of operations that needs to be taken into account.

The preventative maintenance program developed in this chapter is designed to provide those maintenance functions at the frequencies necessary to ensure the various wastewater system components function as intended. This section provides the basis for future staffing by attempting to identify the required effort to perform the City's preventative maintenance program. The analytical method used is summarized in several steps:

- **Inventory:** Quantify the wastewater system infrastructure components to be maintained and/or inspected.

- **Level of Service:** Define the inspection and maintenance activities and intervals applicable to component of the system inventory.

- **Unit Cost:** Define the crew and equipment configurations and corresponding hourly costs to efficiently and safely perform each inspection or maintenance activity.

- **Productivity:** Estimate the amount of time required for the crew to perform the specified inspection or maintenance.

- **Preventative Maintenance Budget:** Calculate annual labor, equipment and contracted costs to provide the defined level of service.

The estimated cost for a preventative maintenance program is reviewed in conjunction with other program costs. The level of service is then adjusted, based on maintenance priorities, to target efforts within available funding.

EXISTING PROGRAM

The City is responsible for maintaining wastewater facilities located on City-owned property and on private property for which the City has an easement. The City is responsible for line cleaning, lift station maintenance, manhole maintenance, and inspection services.

City-Owned Facilities

An inventory of City-owned wastewater facilities is summarized in Table 7-3. This inventory includes facilities constructed within the City service area. The facilities were constructed over a broad time frame and under a variety of design and construction standards.

TABLE 7-3

Publicly-Owned Wastewater Infrastructure

Facility	Inventory
Manholes	1,818
Conveyance Piping Network (linear feet)	341,375
Cleanouts	713
Lift Stations	4

Private Facilities

There is extensive amount of wastewater infrastructure within the City that is situated on private property parcels and is the responsibility of the respective owners to maintain. The City estimates there is approximately 25,000 linear feet of private sewer main located within the City limits. The owners of facilities served include homeowner associations as well as commercial properties. While maintenance of these facilities is the property owner's responsibility, their proper function is important to protection of downstream properties and resources. It is the City's responsibility to periodically inspect the condition of private owned discharge facilities and to enforce their maintenance.

The City has implemented a number of programs designed to provide public outreach and education for maintenance of these private systems. These types of programs are typically operated under a discharge approval process and through proactive preventative maintenance programs. These programs include, but are not limited to:

- Industrial Waste Discharge Approval Processes
- Backwater Valve Installation Program
- Inflow and Infiltration Program

- Illicit Connection Removal Program
- Root Intrusion/Treatment Program
- Rodent Control Program

MAINTENANCE PLANNING CRITERIA

Table 7-4 references the maintenance standards that are applicable to each maintenance program. Table 7-4 also indicates the expected field crew configuration, in terms of number of staff and equipment type that would be used for the various facility maintenance activities.

TABLE 7-4

Inspection and Maintenance Planning Criteria

Task	Current Inspection and Maintenance Interval	Inspection and Maintenance Interval Goal	Crew Configuration	
			Required Staff	Required Equipment
Manhole Inspection	5 years	3 years	3	Eductor, service truck
Pipelines CCTV Inspection	3 years	Inspect whole system every 3 years	3	Eductor, service truck
Pipeline Cleaning (pipeline schedule)	2 days/week, Clean whole system Every 5 years	3 days/week, Clean whole system Every 3 years	3	Eductor, service truck
Pump Station Maintenance	Twice Weekly	Twice Weekly	2	Eductor, service truck
Manhole Program (repair manholes/channels and access improvements)	1day/week	1day/week	1-2	Flatbed truck
FOG Program	0	1 days/week	1	Service truck
Backwater Valve Installation Program	0	5 per year	4	Dump truck, service truck, backhoe, shoring
Root and Rodent control	6 months	2 days/month	1	Service truck
Inflow and Infiltration program (smoke and die testing)	As needed	1 day/week	2	Service Truck
Utility Locates	3-5 days/week	5 days/week	1	Service Truck
Discharge approval review process	20 per year	20 per year	1	None

STAFFING LEVELS

As of February 2018, the City currently has 4.8 full time employees (FTE) dedicated to performing sewer operation and maintenance. Table 7-5 illustrates the required labor to achieve the City's preventative maintenance program based on the goals presented in Table 7-4.

TABLE 7-5

Estimated Staffing Levels

Task	Maintenance Interval Goal	Required Staff	Total Annual Staff Hours
Manhole Program (Repair and Inspect Manholes/Channels and Access Improvements)(1)	Inspect all manholes every 3 years, repair 10 manholes per year	3	967
Pipelines CCTV Inspection(2)	2 days/week	3	2,496
Pipeline Cleaning (Pipeline Schedule)(3)	3 days/week, Clean whole system every 3 years	3	1,522
Lift Station Maintenance(4)	Twice Weekly	2	1,248
FOG Program	1 day/week	1	416
Backwater Valve Installation Program(5)	5 per year	4	160
Root and Rodent Control	2 days/month	1	192
Inflow and Infiltration program (Smoke and Dye Testing)	1 day/week	2	832
Utility Locates(6)	5 days/week	1	560
Discharge Approval Review Process(7)	20 per year	1	40
Unscheduled Maintenance(8)	As required	2	416
Total Hours			8,849
Total FTE(9)			**5.0**

(1) Based on an inspection rate of 20 manholes per day and a repair rate of one manhole per day.
(2) Based on a rate of 1,250 linear feet per day.
(3) Based on a rate of 1,800 linear feet per day.
(4) Based on a rate of 1.5 hours per lift station.
(5) Based on a rate of 1 day per backwater valve installation.
(6) Based on a rate of 70 staff days per year.
(7) Based on a rate of 2 hours per discharge review.
(8) Based on a rate of 4 hours per week.
(9) Based on 220 working days per FTE per year.

Table 7-5 illustrates that the City needs approximately 5.0 FTE to implement its proposed preventative maintenance program. The City is currently working on projects that may allow the elimination of one of the City's lift stations, which could reduce the City's preventative maintenance by 312 hours, or 0.18 FTE. With 4.8 FTE currently performing sewer system operation and maintenance, the City will need additional staffing to perform its preventative maintenance program and achieve its operation and maintenance goals.

CHAPTER 8

CAPITAL IMPROVEMENT PLAN

INTRODUCTION

This chapter presents a 6-year Capital Improvement Plan (CIP) in accordance with the requirements of WAC 173-240 as well as a 20-year CIP. Wastewater capital improvements have been scheduled and prioritized on the basis of growth, regulatory requirements, component reliability, system benefit, and cost. For the proposed projects identified in this chapter, more detailed project descriptions and preliminary project cost estimates are presented in Appendix F. A wastewater base map illustrating the locations of the proposed improvement projects is included in the jacket of the Plan.

Other capital improvement projects may arise in the future that are not identified as part of the City's CIP presented in this chapter. Such projects may be deemed necessary for remedying an emergency situation, accommodating improvements proposed by other agencies, or addressing unforeseen problems with the City's wastewater system. Due to budgetary constraints, the construction of these projects may require that the proposed completion date for projects in the CIP be rescheduled. When new information becomes available, the City retains the flexibility to reschedule, add to, or delete proposed projects and to expand or reduce the scope of the projects, as best determined by the City's Public Works Department. Additionally, future planning efforts by the City or King County may affect land use zoning and service requirements within the City. Developments may create streets or provide alignments and locations of facilities that are different than shown on the Plan. Each capital improvement project will be reevaluated to consider the most recent planning efforts as the proposed completion date for the project approaches.

PROPOSED SYSTEM IMPROVEMENTS

The proposed system improvements in the CIP are based on projects identified in the collection system hydraulic model, problematic gravity mains and lift station issues identified by City operational staff, on-going programs intended to reduce infiltration and inflow, and projects previously scheduled by the City. Each project cost estimate includes 30 percent design and engineering, construction with a 20 percent contingency, and 10.0 percent sales tax. All project costs are based on 2018 dollars, with no adjustments made for inflation in future years.

The recommended CIP projects are summarized below using the following abbreviations:

- GV – Gravity sewer main projects
- G – General system projects and planning projects
- LS – Lift Station improvement projects

All projects from 2019 through 2024 are listed and described. The year shown for each project is the anticipated year of construction.

GRAVITY SYSTEM IMPROVEMENTS

The gravity system improvements identified are designed to increase capacity, bypass problematic gravity mains to reduce the need for sewer system flushing, and to improve access to the mains for operational staff. For budgeting purposes, the cost estimates shown here assume open trench construction in existing right-of-way. The City may be able to realize cost savings by using trenchless technologies such as pipe bursting. The City should investigate these alternative construction methods during the design phase of these projects.

GV-1: 100th Avenue NE 10-Inch Gravity Sewer Replacement (2019)

The City plans to replace approximately 350 LF of 10-inch gravity sewer main that will parallel the existing sewer installed along 100th Avenue NE, between NE 202nd Street and NE 201st Street. The existing sewer will be abandoned. This project will correct an existing condition deficiency.

Estimated Project Cost: $241,000

GV-2: NE 190th Street, NE 189th Place, NE 187th Street, 88th Avenue NE, and 89th Avenue NE Gravity Sewer Installation (2022)

The City plans to construct the following improvements:

- Approximately 300 LF of 8-inch sewer installed along NE 190th Street from 88th Place NE to 89th Avenue NE.
- Approximately 508 LF of 8-inch sewer installed on 88th Avenue NE.
- Approximately 220 LF of 8-inch sewer installed on NE 189th Place.
- Approximately 480 LF of 8-inch sewer installed on 187th Avenue NE.
- Transfer 5 residential connections to the existing 8-inch sewer on 89th Avenue NE.

The existing mains are in easements that are difficult to access for maintenance. The new sewer lines will provide the City with better access to the system for maintenance. The City will be analyzing trenchless alternatives to potentially reduce costs for this project.

Estimated Project Cost: $709,000

GV-3: Beardslee Place, Sunrise Drive and Valley View Street 8-Inch Gravity Sewer Installation (2021)

The City plans construct approximately 400 LF of 8-inch sewer main on Beardslee Place, approximately 1,070 LF of 8-inch sewer on Sunrise Drive, and approximately 470 LF of 8-inch sewer on Valley View Street in order to provide better access for maintenance. The existing mains are in easements that are difficult to access for maintenance.

Estimated Project Cost: $902,000

GV-4: NE 196th Street and SR 527 10-Inch Gravity Sewer Replacement (2019)

The City plans to lower and replace approximately 250 LF of 10-inch gravity sewer main along NE 196th Street at the intersection of NE 196th Street and SR 527 in order to increase the slope of the gravity main to increase the capacity. The project will correct an existing deficiency.

Estimated Project Cost: $159,000

GV-5: NE 186th Street and 98th Avenue NE Gravity 10-Inch Gravity Sewer Replacement and Waynita Drive 12-Inch Gravity Sewer Replacement (2018)

The City plans to replace approximately 430 LF of gravity sewer main at the following locations:

- Approximately 310 LF of 10-inch gravity sewer main along 98th Avenue NE between NE 185th Street and NE 188th Street in order to increase the slope of the gravity main to increase capacity.

- Approximately 120 LF of existing 8-inch gravity sewer main along 167th west of Waynita Drive with 12-inch main in order to increase capacity and prevent surcharging.

Estimated Project Cost: $287,000

GV-6: SR 522 18-Inch Gravity Sewer Replacement (2021)

The City plans to replace approximately 250 LF of 12-inch gravity sewer along SR 522 near 102nd Avenue NE with 18-inch gravity sewer. This project will correct an existing capacity deficiency.

Estimated Project Cost: $200,000

GV-7: Manhole Grade Adjustments (Overlay Program) and Small Works Improvements (2019-2038)

The City has budgeted approximately $200,000 annually dedicated to adjusting manhole rings and covers do to grade changes and to address other small works sewer improvements. These projects will take place in conjunction with City-wide projects and street overlay projects.

Estimated Annual Project Cost: $250,000
Total 6-Year Project Cost: $1,500,000
Total 20 Year Project Cost: $5,000,000

GV-8: Annual I/I Improvements (2019-2038)

The City has budgeted approximately $100,000 annually dedicated to replacing pipelines and repairing manholes with I/I problems. The areas to be improved will be identified through smoke testing, flow monitoring and TV inspection (see project G-1)

Estimated Annual Cost: $100,000
Total 6-Year Project Cost: $600,000
Total 20 Year Project Cost: $2,000,000

GV-9: Canyon Creek 8-Inch Bypass Sewer and 126th Avenue 10-Inch Gravity Sewer Replacement (2023)

The City plans to construct approximately 900 LF of 8-inch gravity sewer at the following locations:

- Installation of approximately 300 LF on 126th Avenue NE from NE 187th Street to approximately NE 188th Street in order to bypass a problematic gravity main.

- Replace approximately 600 LF of 8-inch gravity sewer along 126th Avenue NE between NE 180th Street and NE 181st Street with 10-inch gravity sewer. This project will correct an existing capacity deficiency.

Estimated Project Cost: $429,000

GV-10: NE 175th Street 21-Inch Gravity Sewer Replacement (2022)

The City plans to replace approximately 400 LF of 21-inch gravity sewer on NE 175th Street from 113th Avenue NE to approximately 111th Avenue NE in order to replace a sagging main.

Estimated Project Cost: $325,000

GV-11: NE 101st Place NE 8-Inch Gravity Sewer Replacement (2019)

The City plans to replace approximately 650 LF of 8-inch gravity sewer main at the following locations:

- Approximately 200 LF of 8-inch sewer main on 101st Place NE at NE 189th.
- Approximately 250 LF of 8-inch sewer main on NE 189th at 101st Place NE.
- Approximately 200 LF of 8-inch sewer main on 101st Place NE at NE 188th Street.

This project will correct existing condition deficiencies.

Estimated Project Cost: $312,000

GV-12: 96th Avenue NE 8-Inch Gravity Sewer Main Replacement (2019)

The City plans to replace approximately 1,500 LF of 8-inch gravity sewer main on 96th Avenue NE from NE 182nd Street to NE 185th Street. This project will correct existing deficiencies in the main including, cracks, swells and roots in the main. This project may be a candidate for rehabilitation via cure-in-place pipe construction, which would provide a cost savings.

Estimated Project Cost: $736,000

GV-13: 94th Avenue NE 8-Inch Gravity Sewer Replacement (2019)

The City plans to replace approximately 600 LF of 8-inch gravity sewer on NE 94th Avenue from NE 184th Place to NE 183rd Street. This project will correct an existing condition deficiency.

Estimated Project Cost: $290,000

GV-14: East Riverside Drive 8-Inch Gravity Sewer Replacement (2023)

The City plans to replace approximately 1,500 LF of 8-inch gravity sewer adjacent to East Riverside Drive from 10516 East Riverside Drive to Lift Station 2.

Estimated Project Cost: $697,000

GV-15: Lift Station 4 Abandonment (2021)

Built in 1984, Lift Station 4 serves approximately 23 homes in the Camden Crest Basin. The station has reached the end of its useful replacement parts have become difficult for City staff to obtain. The City is considering alternatives to address the problem. The first option is to replace the existing vacuum pumps with submersible pumps. The second option that the City is considering is to demolish the existing lift station and conveying the Camden Crest Basin flows by gravity to the North Creek Heights Basin. The estimated project cost will be adjusted depending on the alternative selected by the City.

Estimated Project Cost: $907,000

GV-16: Downtown Revitalization NE 185th Street Reconstruction (2019)

This project will replace 8-inch gravity sewer along NE 185th Street from Bothell Way to Beardslee Boulevard. The sewer work is a part of the City's Transportation Improvement Project which will improve and widen NE 185th Street.

Estimated Project Cost: $416,000

GENERAL SYSTEM CAPITAL IMPROVEMENTS

G-1: Infiltration and Inflow Studies (2019-2038)

The City is budgeting $20,000 annually to identify areas of the system that have high I/I rates. This would include smoke testing, TV inspection and flow monitoring. Manholes and mains identified having high I/I rates through these studies would be replaced/rehabilitated as necessary through project G-8.

Estimated Annual Project Cost: $20,000
Total 6 Year Project Cost: $120,000
Total 20 Year Project Cost: $400,000

G-2: Wastewater Comprehensive Plan (2024)

The City plans to update its Wastewater Comprehensive Plan every 6 years.

Estimated Project Cost: $80,000

G-3: Fats, Oils, and Grease (FOG) Study (2019)

Fats, Oils, and Grease (FOG) is a major source of pipe blockages and sewage backups for the City. The City is budgeting $50,000 for a study that will determine the best approach to address the problem and the operation and maintenance costs associated with it.

Estimated Project Cost: $50,000

LIFT STATION CAPITAL IMPROVEMENTS

The following lift station projects are designed to improve operation of the existing lift station.

LS-1: Lift Station 1 Improvements (2020)

Lift Station 1 was originally built in 1990. In 2008, the two main pumps at the station were replaced and an additional bypass vault and pump was added. The station has limited wet well storage and no space at its current location to increase wet well capacity. The City is considering alternatives to alleviate the condition these options include:

- Construct a siphon between the existing lift station and the King County Interceptor on the north side of the Sammamish River; abandon existing lift station.
- Construct a tightline that allows a portion of the Waynita basin to be served by gravity and the remaining portion to be served by the existing lift station.
- Relocate lift station to Wayne Golf Course to provide for more wet well storage.
- Add storage capacity to the existing station.

The estimated project cost will be adjusted depending on the alternative selected.

Estimated Project Cost: $619,000

DEVELOPER EXTENSION PROJECTS

The City is currently aware of a few projects that will be designed, constructed, and financed by developers. The map in the back sleeve of the Plan provides the locations and minimum sizes for these developer extension projects. Changes to the projects may occur in the future, such as land use and zoning changes that allow higher densities and may require larger sewer mains than those shown on the map.

The developer extension projects shown on the map are not intended to show the exact route for the gravity sewers, as these will be determined by the developer and the City through the developer review process. The map is only intended to illustrate the minimum required trunk sizes for these projects, and the manhole in the existing system that was modeled to accept flows from these projects. The modeled manhole used to represent future development was established as far upstream as possible to be as conservative as possible, but may not represent the best point of connection into the collection system based on The City reserves the right to reexamine and remodel specific developments as part of the developer extension review process.

CAPITAL IMPROVEMENTS PLAN SCHEDULE

Table 8-1 provides a summary of each capital improvement project and the proposed schedule for implementation. Table 8-2 provides a schedule recommending the amount each project should be financed each year. Several projects span multiple years. The District can reschedule its capital improvement projects as needed to accommodate unanticipated projects in the future.

TABLE 8-1

Capital Improvement Project Summary

Project Number	Project Title	Year to be Completed	Total Estimated Cost(1)
GV-1	100th Avenue NE 10-inch Gravity Sewer Replacement	2019	$241,000
GV-2	NE 190th Street, NE 189th Place, NE 187th Street, 88th Avenue NE, and 89th Avenue NE Gravity Sewer Installation	2022	$709,000
GV-3	Beardslee Place, Sunrise Drive and Valley View Street 8-inch Gravity Sewer Installation	2021	$902,000
GV-4	NE 191st Street and SR 527 10-inch Gravity Sewer Replacement	2019	$159,000
GV-5	NE 186th Street and 98th Avenue NE Gravity 10-Inch Gravity Sewer Replacement	2018	$287,000
GV-6	SR 522 18-Inch Gravity Sewer Replacement	2021	$200,000
GV-7	Manhole Grade Adjustments (Overlay Program) and Small Works Improvements	2019-2038	$5,000,000
GV-8	Annual I/I Improvements	2019-2038	$2,000,000
GV-9	Canyon Creek 8-Inch Bypass Sewer and 126th Avenue 10-Inch Gravity Sewer Replacement	2023	$429,000
GV-10	NE 175th Street 21-Inch Gravity Sewer Replacement	2022	$325,000
GV-11	NE 101st Place NE 8-Inch Gravity Sewer Replacement	2019	$312,000
GV-12	96th Avenue NE 8-Inch Gravity Sewer Main Replacement	2019	$736,000
GV-13	94th Avenue NE 8-Inch Gravity Sewer Replacement	2019	$290,000
GV-14	East Riverside Drive to Lift Station 2 Gravity Sewer Replacement	2023	$697,000
GV-15	Lift Station 4 Abandonment	2021	$907,000
GV-16	Downtown Revitalization NE 185th Street Reconstruction	2019	$416,000
G-1	Infiltration and Inflow Studies	2019-2038	$400,000
G-2	Wastewater Comprehensive Plan	2024	$80,000
G-3	Fats, Oils, and Grease (FOG) Study	2019	$50,000
LS-1	Lift Station 1 Improvements	2020	$619,000
Total			**$14,759,000**

(1) Project Costs are in 2018 dollars. Construction Cost Index = 5932 (ENR, February 2018).

TABLE 8-2

6-Year Capital Improvement Project Schedule

Project Number	Total Project Cost	2019	2020	2021	2022	2023	2024	2025-2038
GV-1	$241,000	$241,000						
GV-2	$709,000				$709,000			
GV-3	$902,000			$902,000				
GV-4	$159,000	$159,000						
GV-5	$287,000	$287,000						
GV-6	$200,000			$200,000				
GV-7	$5,000,000	$250,000	$250,000	$250,000	$250,000	$250,000	$250,000	$3,500,000
GV-8	$2,000,000		$200,000		$200,000		$200,000	$1,400,000
GV-9	$429,000					$429,000		
GV-10	$325,000				$325,000			
GV-11	$312,000	$312,000						
GV-12	$736,000	$736,000						
GV-13	$290,000	$290,000						
GV-14	$697,000					$697,000		
GV-15	$907,000			$907,000				
GV-16	$416,000	$416,000						
G-1	$400,000	$20,000	$20,000	$20,000	$20,000	$20,000	$20,000	$280,000
G-2	$80,000						$80,000	
G-3	$50,000	$50,000						
LS-1	$619,000		$619,000					
Total	**$14,759,000**	**$2,761,000**	**$1,089,000**	**$2,279,000**	**$1,504,000**	**$1,396,000**	**$550,000**	**$5,180,000**

CHAPTER 9

FINANCIAL PROGRAM

INTRODUCTION

This chapter presents the financial program for the City's wastewater utility. Through the financial program the City's Public Works Department is assured that the necessary elements (maintenance, operations, capital projects and inspection programs) are carried out to insure the continued viability of the utility and that an uninterrupted and desired level of service is maintained. This is key in establishing wastewater rates and other charges that reflect equitable and actual costs of providing wastewater service to the City.

Rate studies are an important tool used to maintain rates at a level needed to fund the Utility. The City conducted a water and sewer rate study in 2016. Rate increases were recommended to cover increased operational costs due to cost of living, KCDNR treatment costs, a new maintenance and operations facility and a $400,000 annual Capital Improvement Program. Only a portion of the recommended rate increases were implemented. Just as other capital improvement projects may arise, be rescheduled or deleted, a City's financial plan needs to be flexible enough to accommodate changes in the anticipated program. The City's Wastewater Financial Plan will be reviewed annually to consider the most recent planning efforts, the current inflation/construction cost increases, and the KCDNR treatment rates. The analysis is based on a starting point beginning in 2018 and continuing through 2024. On the expense side, it includes the capital program as presented in the City-wide Capital Facilities Program (CFP), the reserves as identified during the development of the CFP, increases in the maintenance level of service (addition of one FTE), KCDNR treatment costs, and depreciation costs. On the revenue side, it includes utility billing revenues, depreciation, facility connection charges, revenue bonds, loans and grants.

EXISTING SERVICE RATES AND CHARGES

The existing service rates and charges were established by City Ordinance Nos. 2235 and 2248 and City Resolution No. 1370. The resolutions specify base rate, volume rate, and system development charge. The City ordinances and resolutions are provided in Appendix G.

SEWER RATES

Monthly base rates and volume rates were established by City Ordinance Nos. 2235 and 2248, passed in 2017 and 2018, respectively. Table 9-1 summarizes the bimonthly base rate, which is based on location and customer class. The volume rate for single family residences is based on the annualized winter-average water usage (AWWU) from the prior year which exceeds 200 cubic feet per month. The winter period for this purpose is

defined as November 1st through June 30th. The volume rate for commercial, schools and multi-unit residences is based on water consumption which exceeds 750 cubic feet in any month.

TABLE 9-1

Existing Sewer Base Rate (City Ordinances Nos. 2235 and 2248)

Year 2018 Rates		
Inside City Limits	**Bimonthly Base Rate**	**Volume Rate(1)**
Single-Family Residential	$120.10 per dwelling unit	$3.98 per CCF
Senior Low Income Residential(3)	$90.08 per dwelling unit	$2.99 per CCF
Multi-Family Residential	$157.91 per dwelling unit	$10.12 per CCF
Schools	$157.91(2) per school	$10.12 per CCF per building
Commercial	$157.91 per occupancy	$10.12 per CCF
Outside City Limits	**Bimonthly Base Rate(1)**	**Volume Rate(4)**
Single-Family Residential	$150.13 per dwelling unit	$4.98 per CCF
Senior Low Income Residential	$112.60 per dwelling unit	$0
Multi-Family Residential	$197.38 per dwelling unit	$12.65 per CCF
Schools	$197.38 per school	$12.65 per CCF per building
Commercial	$197.38 per occupancy	$12.65 per CCF

(1) The volume rate is charged per 100 cubic feet of excess.
(2) During months when school is not in session for the entire month, the bimonthly charge is $315.78 per school.
(3) Calculated by applying a 25 percent discount to Single Family Residential rates
(4) Calculated by applying a 25 percent surcharge to rates inside city limits per City Ordinance No. 2105, passed in 2012.

SYSTEM DEVELOPMENT CHARGE

System development charges were revised by City Resolution No. 1370, passed in 2017. The charge amount is based upon the use of the property for which the sewer service is applied, according to the schedule in Table 9-2. The charge is imposed on new customers requesting sewer service.

TABLE 9-2

2018 System Development Charge (City Resolution No. 1370)

Customer Classification	Unit	Sewer Main Connection Charge
Single-Family Residential	dwelling unit	$2,941.00
Multi-Family Residential	per ERU	$2,941.00
Commercial	per ERU	$2,941.00
School	per ERU	$2,941.00
All Other	per ERU	$2,941.00

FINANCIAL ANALYSIS

The Sanitary Sewer Utility operates as a separate enterprise fund. The utility's revenues and expenditures are accounted for independent of other utilities and the general fund. The Financial Consulting Solutions Group (FCSG) performed a rate study update in 2016 for the City's sewer utility, which included an evaluation of appropriate reserve levels and the determination of an equitable breakdown of existing reserves between operating and capital funds. The utility should accumulate monies over time for planned capital improvement projects and also provide a contingency for unexpected capital funding needs. Recently the City in developing its Capital Facilities Plan (CFP) set forth (in accordance with the FCSG 2016 Rate Study) the following financial strategy was incorporated into this Plan for the sewer utility:

- 30 to 60-day operating reserves shall be maintained in the Sewer Utility Fund.

- Capital reserves of 2 percent of fixed assets shall be maintained in each utility fund.

- Capital reserves of 10 percent of the average annual capital improvement projects shall be maintained in each utility fund.

For the Sanitary Sewer Utility this means the following reserve values for 2018:

- Capital Emergency Reserve = $235,000
- Operating Reserve = $519,439
- Capital Reserve = $121,490

The projected beginning fund balance for January 2018 has had these reserves identified and accounted for.

The following increases in expenses have been anticipated in future years:

- 5 percent cost of living increase in 2019 and 2021 for O&M Costs.

- Net growth in sewer service of 0.5 percent (1 percent growth rate minus 0.5 percent for water conservation).

- Known KCDNR Treatment increases:

    - 2019 – 5.2%

    - 2021-2023 – 2.6%

The analysis assumes that the rates will be increased by 5 percent annually to accommodate the above increases. Table 9-3 provides the revenues and expenses for the planning period. It is important to note this analysis shows that in some years the City will have a negative net cash flow, the minimum end balance for the 6-year planning period is $1.4 million. The City can mitigate this through a variety of options including increasing facility charges and pursuing alternative funding sources. Appendix H provides a description of several funding source alternatives that are available to the City for the financing of projects in the CIP.

TABLE 9-3

Projected Revenues and Expenses: 2018 – 2024

	2018	2019	2020	2021	2022	2023	2024
Revenues							
Facility Charges	$350,000	$250,000	$250,000	$125,000	$75,000	$75,000	$75,000
Permits	$55,000	$57,750	$57,750	$60,638	$60,638	$60,638	$60,638
Utility Billing Revenues	$7,544,514	$7,885,526	$8,241,952	$8,614,488	$9,003,863	$9,410,837	$9,836,207
Additional Downtown Facility Charges	$150,000	$100,000	$75,000	$75,000	$75,000	$75,000	$75,000
Total Operating Revenues	**$8,099,514**	**$8,293,276**	**$8,624,702**	**$8,875,125**	**$9,214,500**	**$9,621,475**	**$10,046,845**
Expenses							
Salaries	$746,660	$783,993	$783,993	$823,193	$823,193	$823,193	$823,193
Benefits	$363,140	$399,454	$399,454	$439,399	$439,399	$439,399	$439,399
Depreciation	$612,000	$642,600	$642,600	$674,730	$674,730	$674,730	$674,730
Supplies	$68,100	$71,505	$71,505	$75,080	$75,080	$75,080	$75,080
Treatment	$4,054,315	$4,286,465	$4,307,897	$4,442,002	$4,580,282	$4,722,866	$4,722,866
Services	$101,395	$106,465	$106,465	$111,788	$127,867	$127,867	$127,867
Interfund Services	$314,035	$329,737	$329,737	$346,224	$346,224	$346,224	$346,224
Services: Capital Program (Comp Plan – CFP S7)					$125,000		
Services: Capital Program (Infiltration – CFP S2)	$25,000	$25,000	$25,000	$25,000	$25,000	$25,000	$25,000
Services: Database Management Software	$18,150	$77,768	$77,768	$77,768	$77,768	$77,768	$77,768
Excise Tax/Property Tax	$258,063	$270,966	$270,966	$284,514	$284,514	$284,514	$284,514
Sewer Utility Tax Paid to General Fund	$400,183	$420,192	$420,192	$441,202	$441,202	$441,202	$441,202
Total Operating Expenses	**$6,961,041**	**$7,414,145**	**$7,435,577**	**$7,740,900**	**$8,020,259**	**$8,037,843**	**$8,037,843**
Capital Improvement Program(1)	$1,200,706	$1,563,415	$1,093,360	$2,292,701	$1,516,068	$1,410,016	$556,633
New Debt (Revenue Bond Interest)	$124,206	$125,956	$123,156	$125,356	$126,606	$122,606	$122,606
Total Capital Expenses	**$1,324,912**	**$1,689,371**	**$1,216,517**	**$2,418,058**	**$1,642,674**	**$1,532,622**	**$679,239**
Total Expenses	**$8,285,953**	**$9,794,101**	**$8,822,733**	**$9,793,257**	**$9,434,865**	**$9,439,449**	**$8,610,449**
Net Cash Flow	$(186,439)	$(734,417)	$131,869	$(1,032,941)	$(97,104)	$512,239	$1,911,053
Beginning Balance	$3,332,628	$3,146,189	$2,411,771	$2,543,640	$1,510,700	$1,413,596	$1,925,835
End Balance	**$3,146,189**	**$2,411,771**	**$2,543,640**	**$1,510,700**	**$1,413,596**	**$1,925,835**	**$3,836,888**

(1) The Capital Improvement Program cost is the total annual project cost from Table 8-2 adjusted for 2 percent inflation per year.

APPENDIX A

WASTEWATER AGREEMENTS

Executed in 10 counterparts of which this is counterpart No. 1

AGREEMENT FOR SEWAGE DISPOSAL

THIS AGREEMENT made and executed this 27th day of April, 1961, between the CITY of BOTHELL, a municipal corporation of the State of Washington, hereinafter referred to as the "City" and the MUNICIPALITY OF METROPOLITAN SEATTLE, a municipal corporation of the State of Washington, hereinafter referred to as "Metro",

W I T N E S S E T H:

WHEREAS, the public health, welfare and safety of the residents of the City and the residents of the metropolitan area require the elimination of existing sources of water pollution and the preservation of the fresh and salt water resources of the area; and

WHEREAS, growth of population, topographic conditions and preservation of water resources require that certain major sewage disposal works be constructed and operated and that the cities and special districts within the metropolitan area dispose of their sewage in accordance with a comprehensive plan for the metropolitan area; and

WHEREAS, Metro was established by vote of the people in the metropolitan area pursuant to Chapter 35.58 RCW for the purpose of performing the function of metropolitan sewage disposal, has adopted a comprehensive plan for the disposal of sewage from the metropolitan area and intends to develop the facilities needed to carry out such plan and to issue revenue bonds to finance such development; and

WHEREAS, to carry out the purposes of Metro and perform its authorized function and to provide for the disposal of sewage from the City into the metropolitan sewage disposal system it is necessary that a contract be now entered into establishing certain rights and duties of the parties incident thereto;

NOW, THEREFORE, in consideration of the mutual covenants contained herein, IT IS HEREBY AGREED as follows:

Section 1. Definition of Terms. The following words and phrases used in this contract shall have the meanings hereinafter set forth in this section:

(a) The words "Comprehensive Plan" shall mean the Comprehensive Sewage Disposal Plan for the metropolitan area adopted in Resolution No. 23 of the Municipality of Metropolitan Seattle and as same may be hereafter amended from time to time in the manner required by law.

(b) The words "Metropolitan Sewerage System" shall mean all of the facilities to be constructed, acquired or used by Metro as a part of the Comprehensive Plan. The Metropolitan Sewerage System shall generally include sewage disposal facilities with capacity to receive sewage from natural drainage areas of approximately one thousand acres or more. The Metropolitan Sewerage System shall thus include trunk or interceptor sewer facilities extending to a point within each tributary, and natural drainage area, where not more than one thousand acres remain to be served beyond the upper terminus of such trunk or interceptor sewer.

(c) The words "Local Sewerage Facilities" shall mean all facilities owned or operated by the Participant for the local collection of sewage to be delivered to the Metropolitan Sewerage System.

(d) The words "Metropolitan Area" shall mean the area contained within the boundaries of the Municipality of Metropolitan Seattle as now or hereafter constituted.

(e) The word "Participant" shall mean each city, town, county, sewer district, municipal corporation, person, firm or private corporation which shall dispose of any portion of its sanitary sewage into the Metropolitan Sewerage System and shall have entered into a contract with Metro providing for such disposal.

(f) The words "Residential Customer" shall mean a single family residence billed by a Participant for sewerage charges.

Section 2. Delivery and Acceptance of Sewage. From and after July 1, 1962, the City shall deliver to the Metropolitan Sewerage System all of the sewage and industrial wastes collected by it and Metro shall accept the sewage and wastes delivered for treatment subject to such reasonable rules and regulations as may be adopted from time to time by the Metropolitan Council. Metro shall not directly accept sewage or wastes from any person, firm, corporation or governmental agency which is located within the boundaries of or is delivering its sewage into the Local Sewerage Facilities of any Participant without the written consent of such Participant.

Section 3. Construction of Facilities. Metro shall construct, acquire or otherwise secure the right to use all facilities required for the disposal of sewage delivered to Metro pursuant to this Agreement and shall perform all services required for the maintenance, operation, repair, replacement or improvement

of the Metropolitan Sewerage System, including any additions and betterments thereto.

Section 4. Connection of Local Sewerage Facilities to the Metropolitan Sewerage System. Local Sewerage Facilities of the City shall be connected to the Metropolitan Sewerage System at such time as any portion of the Metropolitan Sewerage System shall be available to receive sewage collected by such facilities. Metro shall, at its sole expense, connect those Local Sewerage Facilities of the City which are now in existence or which shall be constructed in accordance with the rules and regulations of Metro prior to the availability of the Metropolitan Sewerage System. Local Sewerage Facilities constructed after the Metropolitan Sewerage System shall have been made available to the area served by such Local Sewerage Facilities shall be connected to the Metropolitan Sewerage System at the expense of the Participant in accordance with the rules and regulations of Metro.

Section 5. Payment for Sewage Disposal. For the disposal of sewage collected by the City and delivered to Metro, the City shall pay to Metro on or before the last day of each month during the term of this agreement, commencing with the month of July, 1962, a sewage disposal charge determined as provided in this Section 5.

1. For the quarterly periods ending March 31, June 30, September 30 and December 31 of each year every Participant shall submit a written report to Metro setting forth (a) the number of Residential Customers billed by such Participant for local sewerage charges as of the last day of the quarter, (b) the total number of all customers billed by such Participant as of such day and (c) the total water consumption during such

quarter for all customers billed by such Participant other than Residential Customers. The quarterly water consumption report shall be taken from water meter records and may be adjusted to exclude water which does not enter the sanitary facilities of a customer. Where actual sewage flow from an individual customer is metered, the metered sewage flows shall be reported in lieu of adjusted water consumption. The total quarterly water consumption report in cubic feet shall be divided by 2,700 to determine the number of Residential Customer equivalents represented by each Participant's customers other than single family residences. The first report shall cover the quarterly period ending December 31, 1960 and shall be submitted on or before March 1, 1961. Succeeding reports shall be made for each quarterly period thereafter and shall be submitted within thirty (30) days following the end of the quarter. Metro shall maintain a permanent record of the quarterly customer reports from each Participant.

2. To form a basis for determining the monthly sewage disposal charge to be paid by each Participant during any particular quarterly period Metro shall ascertain the number of Residential Customers and Residential Customer equivalents of each Participant for each such quarterly period beginning with the July-September quarter of the year 1962. This determination shall be made by taking the sum of the actual number of Residential Customers reported as of the last day of the next to the last preceding quarter and the average number of Residential Customer equivalents per quarter reported for the four quarters ending with said next to the last preceding quarter, adjusted to eliminate any Residential Customers or Residential Customer equivalents whose sewage is delivered to a governmental

agency other than Metro or other than a Participant for disposal outside of the Metropolitan Area.

3. For the period from July 1, 1962 to December 31, 1963, the monthly rate for each Residential Customer and Residential Customer equivalent of the City shall be Two dollars ($2.00) and the monthly sewage disposal charge to be paid by each Participant to Metro shall be obtained by multiplying the number of Residential Customers and Residential Customer equivalents of the Participant as determined in subparagraph 2 of this section by the monthly rate of Two dollars.

4. For each calendar year after the year 1963, the monthly sewage disposal charge payable to Metro shall be determined as follows:

a) Prior to July 1st of each year Metro shall determine its total monetary requirements for the disposal of sewage during the next succeeding calendar year. Such requirements shall include the cost of administration, operation, maintenance, repair and replacement of the Metropolitan Sewerage System, establishment and maintenance of necessary working capital and reserves, the requirements of any resolution providing for the issuance of revenue bonds of Metro to finance the acquisition, construction or use of sewerage facilities, plus not to exceed 1% of the foregoing requirements for general administrative overhead costs.

b) To determine the monthly rate per Residential Customer or Residential Customer equivalent to be used during said next succeeding calendar year, the total monetary requirements for disposal of sewage as determined in subparagraph 4(a) of this section shall be divided by twelve and the resulting quotient shall be divided by the

total number of Residential Customers and Residential Customer equivalents of all Participants ascertained in accordance with subparagraph 2 of this section for the October-December quarter preceding said July 1st; provided, however, that the monthly rate shall not be less than Two dollars ($2.00) per month per Residential Customer or Residential Customer equivalent at any time during the period ending July 31, 1972.

c) The monthly sewage disposal charge paid by each Participant to Metro shall be obtained by multiplying the monthly rate by the number of Residential Customers and Residential Customer equivalents of the Participant determined as provided in Paragraph 2 of this section. An additional charge may be made for sewage or wastes of unusual quality or composition requiring special treatment, or Metro may require pretreatment of such sewage or wastes. An additional charge may be made for quantities of storm or ground waters entering those Local Sewerage Facilities which are constructed after January 1, 1961 in excess of the minimum standard established by the general rules and regulations of Metro.

5. A statement of the amount of the monthly sewage disposal charge shall be submitted by Metro to each Participant on or before the first day of each month during the term of this agreement commencing with the month of July 1962 and payment of such charge shall be due on the last day of such month. If any charge or portion thereof due to Metro shall remain unpaid for fifteen days following its due date, the Participant shall be charged with and pay to Metro interest on the amount unpaid from its due date until paid at the rate of 6% per annum, and Metro may, upon failure to pay such amount, enforce payment by any remedy available at law or equity.

6. The City irrevocably obligates and binds itself to pay its sewage disposal charge out of the gross revenues of the combined water and sewerage system of the City. The City further binds itself to establish, maintain and collect rates and charges for water and for sewage disposal service which will at all times be sufficient to pay all costs of maintenance and operation of the combined water and sewerage system of the City, including the sewage disposal charge payable to Metro hereunder, and sufficient to pay the principal of and interest on any revenue bonds of the City which shall constitute a charge upon such gross revenue. It is recognized by Metro and the City that the sewage disposal charge paid by the City to Metro shall constitute an expense of maintenance and operation of the combined water and sewerage system of the City. The City shall provide in the issuance of future water and sewer revenue bonds of the City that expenses of maintenance and operation of the combined water and sewerage system of the City shall be paid before payment of principal and interest of such bonds. It is further recognized that the City shall have the right to fix its own schedule of water and sewerage rates and charges, provided that same shall produce revenue sufficient to meet the covenants contained in this agreement.

Section 6. Responsibility of Participant. Each Participant shall be responsible for the delivery to the Metropolitan Sewerage System of sewage collected by such Participant, for the construction, maintenance and operation of Local Sewerage Facilities, and for the payment of all costs incident to the collection of such sewage and its delivery to the Metropolitan Sewerage System.

Section 7. Records. Permanent books and records shall be kept by Metro of the rates established, the volumes of sewage delivered and discharged into the Metropolitan Sewerage System wherever such volumes are measured and the number of Residential Customers and Residential Customer

equivalents reported by each Participant, in addition to complete books of account showing all costs incurred in connection with the Metropolitan Sewerage System. Such records shall be maintained beginning with the commencement of operation of any part of the Metropolitan Sewerage System.

Section 8. Development of Metropolitan Sewerage System. It is contemplated that the Metropolitan Sewerage system will be developed in stages and the nature of facilities to be constructed, acquired or used and the time of such construction, acquisition or use shall be determined by Metro, it being contemplated that Metro shall ultimately provide sewage disposal service for the entire Metropolitan area.

Section 9. Use of Facilities Owned or Operated by the City. Effective July 1, 1962, or such earlier date as may be mutually agreed upon (hereinafter called "takeover date"), Metro shall have the exclusive right to use and the duty to maintain, operate, repair and replace the facilities owned by the City which are described in Exhibit "A" attached hereto and by this reference made a part hereof, subject to the continued availability of such facilities to receive, transport or treat sewage delivered by the City. From and after the takeover date Metro shall acquire, construct, maintain, operate, repair and replace all facilities now or hereafter required for the treatment and disposal of sewage delivered by the City and the City shall make payment for such treatment and disposal as provided in Section 5 of this Agreement.

For the privilege of using the facilities described in Exhibit "A" Metro shall pay to the City the total amount of Ninety eight thousand seven hundred twenty seven and 53/100 Dollars ($98,727.53) (hereinafter called "amount of reimbursement").

If the City sh l construct improvements c additions to the facilities described in Exhibit "A" with the approval of Metro after the date of this Agreement and prior to the take-over date, the City shall be reimbursed for the actual cost thereof in cash within thirty (30) days following the said takeover date in addition to the amount of reimbursement set forth above. The right of Metro to use facilities designated as "temporary" shall expire six months following the date of completion as determined by Metro of permanent metropolitan facilities adequate to replace such temporary facilities. The City shall continue to own the facilities described in this Section 9 and shall continue to pay the principal of and interest on any bonds issued to pay in whole or in part the cost of acquisition and construction of such facilities, provided that facilities which are designated as "permanent" shall be conveyed by the City to Metro by quit claim deed upon payment of all presently outstanding revenue bonds or general obligation bonds of the City secured by or issued to acquire or construct said facilities.

The City shall give written notice to Metro prior to June 1, 1961, setting forth the manner in which the amount of reimbursement shall be paid. The City may elect to receive all or any portion of said amount in cash within thirty (30) days following the date of delivery of revenue bonds issued by Metro for the purpose of providing funds therefor and, in any event, not later than July 1, 1962 (hereinafter called "cash payment date") and may elect to receive any portion which is not paid on said cash payment date together with interest thereon at the rate of 4% per annum from said date, in the form of a credit against the City s monthly sewage disposal charge in equal monthly amounts sufficient to amortize such unpaid amount of reimbursement and interest thereon prior

to July 1, 1977. The City may at any time after the cash payment date elect to receive any unpaid portion of the amount of reimbursement in cash with interest at the rate of 4% per annum to date of final payment by giving written notice to Metro at least one year prior to the date such final payment is to be made.

Section 10. Insurance and Liability for Damages. Each Participant with a population of less than 100,000 shall secure and maintain with responsible insurers all such insurance as is customarily maintained with respect to sewerage systems of like character against loss of or damage to the respective sewerage facilities of each and against public and other liability to the extent that such insurance can be secured and maintained at reasonable cost. Any liability incurred by Metro as a result of the operation of the Metropolitan Sewerage System shall be the sole liability of Metro and any liability incurred by the City as a result of the operation of the Local Sewerage Facilities of the City shall be the sole liability of the City.

Section 11. Assignment. Neither of the parties hereto shall have the right to assign this Agreement or any of its rights and obligations hereunder nor to terminate its obligations hereunder by dissolution or otherwise without first securing the written consent of the other party and this Agreement shall be binding upon and inure to the benefit of the respective successors and assigns of the parties hereto. In the event that the City should be dissolved, the local sewer facilities owned and operated by the City shall by such act of dissolution be assigned and transferred to Metro subject to any outstanding debts of the City incurred for the construction

or acquisition of such facilities and subject to the obligation of Metro to continue to provide sewer service to the residents served by such local facilities upon payment of the reasonable costs thereof.

Section 12. Effective Date and Term of Contract. This Agreement shall be in full force and effect and binding upon the parties hereto upon the execution of the Agreement and shall continue in full force and effect for a period of fifty years unless prior to the takeover date Metro shall not have entered into a firm commitment for the sale of revenue bonds to finance any portion of the Comprehensive Plan, then in such event only, this Agreement shall be terminated as of said date. Metro shall make every reasonable effort to secure such a commitment prior to said date.

Section 13. Notice. Whenever in this Agreement notice is required to be given, the same shall be given by Registered Mail addressed to the respective parties at the following addresses:

Municipality of Metropolitan Seattle
152 Denny Way
Seattle 9, Washington

City of Bothell
Bothell, Washington

unless a different address shall be hereafter designated in

writing by either of the parties.

The date of giving such notice shall be deemed to be the date of mailing thereof. Billings for and payments of sewage disposal costs may be made by regular mail.

Section 14. Execution of documents. This Agreement shall be executed in ten counterparts, any of which shall be regarded for all purposes as one original. Each party agrees that it will execute any and all deeds, instruments, documents and resolutions or ordinances necessary to give effect to the terms of this Agreement.

Section 15. Waiver. No waiver by either party of any term or condition of this Agreement shall be deemed or construed as a waiver of any other term or condition, nor shall a waiver of any breach be deemed to constitute a waiver of any subsequent breach whether of the same or a different provision of this Agreement.

Section 16. Remedies. In addition to the remedies provided by law, this Agreement shall be specifically enforceable by either party.

Section 17. Entirety. This Agreement merges and supersedes all prior negotiations, representations and agreements between the parties hereto relating to the subject matter hereof and constitutes the entire contract between the parties concerning the disposal of sewage by the City and acceptance of such sewage by Metro for disposal.

IN WITNESS WHEREOF, the parties hereto have executed

this Agreement as of the day and year first above written.

CITY OF BOTHELL

By Charles H. Kaysner
Charles H. Kaysner
Mayor

ATTEST:

W. C. Caldwell
W. C. Caldwell
Clerk

MUNICIPALITY OF METROPOLITAN SEATTLE

By C. Carey Donworth
C. Carey Donworth
Chairman of the Council

ATTEST:

Maralyn Sullivan
Maralyn Sullivan
Clerk of the Council

STATE OF WASHINGTON)
) ss.
COUNTY OF KING)

On this 17th day of APRIL, 1961 before me personally appeared CHARLES H. KAYSNER and W. C. CALDWELL, to me known to be the Mayor and City Clerk, respectively, of the City of Bothell, a municipal corporation, and acknowledged the within and foregoing instrument to be the free and voluntary act and deed of said corporation, for the uses and purposes therein mentioned, and on oath stated that they were authorized to execute said instrument and that the seal affixed is the corporate seal of said corporation.

IN WITNESS WHEREOF, I have hereunto set my hand and affixed my official seal the day and year first above written

Gordon G. Lunquist

Notary Public in and for the State of Washington, residing at KIRKLAND.

STATE OF WASHINGTON)
) ss.
COUNTY OF KING)

On this 27 day of April, 1961, before me personally appeared C. CAREY DONWORTH and MARALYN SULLIVAN, to me known to be the Chairman of the Council and Clerk of the Council, respectively, of the Municipality of Metropolitan Seattle, a municipal corporation, and acknowledged the within and foregoing instrument to be the free and voluntary act and deed of said corporation, for the uses and purposes therein mentioned, and on oath stated that they were authorized to execute said instrument and that the seal affixed is the corporate seal of said corporation.

IN WITNESS WHEREOF, I have hereunto set my hand and affixed my official seal the day and year first above written.

Arthur S. Shorey

Notary Public in and for the State of Washington, residing at Seattle

Executed in ...6... counterpa
which this is counterpart No. ...1...

AGREEMENT FOR SEWAGE DISPOSAL

MUNICIPALITY OF METROPOLITAN SEATTLE - CITY OF BOTHELL

THIS AGREEMENT made as of this 1st day of December, 1964, between the CITY OF BOTHELL, a municipal corporation of the State of Washington, hereinafter referred to as the "City" and the MUNICIPALITY OF METROPOLITAN SEATTLE, a municipal corporation of the State of Washington, hereinafter referred to as "Metro",

W I T N E S S E T H:

WHEREAS, the public health, welfare and safety of the residents of the City and the residents of the Metroplitan Area require the elimination of existing sources of water pollution and the preservation of fresh and salt water resources; and

WHEREAS, growth of population, topographic conditions and preservation of water resources require that certain major sewage disposal works be constructed and operated and that the cities and special districts within the Lake Washington drainage basin dispose of their sewage in accordance with a comprehensive sewage disposal plan; and

WHEREAS, Metro is engaged in developing and operating a metropolitan sewage disposal system and the City is engaged in developing and operating a local sewage collection system, and sewage has been delivered by the City to Metro for disposal pursuant to an Agreement for Sewage Disposal dated April 27, 1961; and

WHEREAS, the City now desires to deliver to Metro sewage collected by the City from areas which are presently located outside of the boundaries of Metro and Metro is willing to accept such sewage for disposal under certain terms and conditions; and

WHEREAS, it is necessary that a new contract be now entere into establishing the rights and duties of the parties;

NOW, THEREFORE, in consideration of the mutual covenants contained herein, it is hereby agreed as follows:

Section 1. Definition of Terms. The following words and phrases used in this contract shall have the meanings hereinafter set forth in this section:

(a) The words "Comprehensive Plan" shall mean the Comprehensive Sewage Disposal Plan adopted in Resolution No. 23 of the Municipality of Metropolitan Seattle and all amendments thereof heretofore or hereafter adopted.

(b) The words "Metropolitan Sewerage System" shall mean all of the facilities to be constructed, acquired or used by Metro as a part of the Comprehensive Plan. The Metropolitan Sewerage System shall generally include sewage disposal facilities with capacity to receive sewage from natural drainage areas of approximately one thousand acres or more. The Metropolitan Sewerage System shall thus include trunk or interceptor sewer facilities extending to a point within each tributary, and natural drainage area, where not more than one thousand acres remain to be served beyond the upper terminus of such trunk or interceptor sewer.

(c) The words "Local Sewerage Facilities" shall mean all facilities owned or operated by a Participant for the local collection of sewage to be delivered to the Metropolitan Sewerage System.

(d) The words "Metropolitan Area" shall mean the area contained within the boundaries of the Municipality of Metropolitan Seattle as now or hereafter constituted.

(e) The word "Participant" shall mean each city, town, county, sewer district, municipal corporation, person,

firm or private corporation which shall dispose of any portion of its sanitary sewage into the Metropolitan Sewerage System and shall have entered into a contract with Metro providing for such disposal.

(f) The words "Residential Customer" shall mean a single family residence billed by a Participant for sewerage charges.

Section 2. Delivery and Acceptance of Sewage. From and after the date of this agreement, the City shall deliver to the Metropolitan Sewerage System all of the sewage and industrial wastes collected by it and Metro shall accept the sewage and wastes delivered to the Metropolitan Sewerage System for treatment subject to such reasonable rules and regulations as may be adopted from time to time by the Metropolitan Council. Metro shall not directly accept sewage or wastes from any person, firm, corporation or governmental agency which is located within the boundaries of or is delivering its sewage into the Local Sewerage Facilities of the City without the written consent of the City.

Section 3. Construction of Facilities. Metro shall construct, acquire or otherwise secure the right to use all facilities and shall perform all services required for the maintenance, operation, repair, replacement or improvement of the Metropolitan Sewerage System, including any additions and betterments thereto. Metro shall in its sole discretion determine the nature, location and time of construction of facilities of the Metropolitan Sewerage System.

Section 4. Connection of Local Sewerage Facilities to the Metropolitan Sewerage System. Local Sewerage Facilities of the City shall be connected to the Metropolitan Sewerage

System at such time as any portion of the Metropolitan Sewerage System shall be available to receive sewage collected by such facilities. Metro shall, at its sole expense, connect Local Sewerage Facilities of the City which are in existence on the date of this contract. Local Sewerage Facilities constructed after the date of this contract shall be connected to the Metropolitan Sewerage System at the expense of the City in accordance with the rules and regulations of Metro.

Section 5. Payment for Sewage Disposal. For the disposal of sewage collected by the City and delivered to Metro the City shall pay to Metro on or before the last day of each month during the term of this agreement a sewage disposal charge determined as provided in this Section 5.

1. For the quarterly periods ending March 31, June 30, September 30 and December 31 of each year every Participant shall submit a written report to Metro setting forth (a) the number of Residential Customers billed by such Participant for local sewerage charges as of the last day of the quarter, (b) the total number of all customers billed by such Participant as of such day and (c) the total water consumption during such quarter for all customers billed by such Participant other than Residential Customers. The quarterly water consumption report shall be taken from water meter records and may be adjusted to exclude water which does not enter the sanitary facilities of a customer. Where actual sewage flow from an individual customer is metered, the metered sewage flows shall be reported in lieu of adjusted water consumption. The total quarterly water consumption report in cubic feet shall be divided by 2,700 to determine the number of Residential Customer equivalents represented by each Participant's customers other than single family residences. Metro shall

maintain a permanent record of the quarterly customer reports from each Participant. The City shall bill every customer receiving sewer service from the City.

2. To form a basis for determining the monthly sewage disposal charge to be paid by each Participant during any particular quarterly period Metro shall ascertain the number of Residential Customers and Residential Customer equivalents of each Participant. This determination shall be made by taking the sum of the actual number of Residential Customers reported as of the last day of the next to the last preceding quarter and the average number of Residential Customer equivalents per quarter reported for the four quarters ending with said next to the last preceding quarter, adjusted to eliminate any Residential Customers or Residential Customer equivalents whose sewage is delivered to a governmental agency other than Metro or other than a Participant for disposal outside of the Metropolitan Area. The number thus determined is hereafter called the "basic reported number."

The basic reported number of Residential Customers and Residential Customer equivalents of the City shall be further adjusted by adding thereto twenty-five per cent (25%) of the number of Residential Customers or Residential Customer equivalents of the City located outside the boundaries of Metro. The sum thus determined is hereinafter called the "adjusted reported number." If any portion of the area served by the City shall be annexed to Metro after the date of this agreement the twenty-five per cent additive adjustment shall be eliminated as to the number of Residential Customers or Residential Customer equivalents located within such annexed area as of the first day of the month following the month in which such annexation shall have become effective. The adjusted reported number of Residential Customers and Residential Customer equivalents of the City shall be the

number of Residential Customers and Residential Customer equivalents reported by the City for the purpose of determining sewage disposal charges pursuant to Paragraph 3 of this section.

3. For each calendar year the monthly sewage disposal charge payable to Metro shall be determined as follows:

a) Prior to July 1st of each year Metro shall determine its total monetary requirements for the disposal of sewage during the next succeeding calendar year. Such requirements shall include the cost of administration, operation, maintenance, repair and replacement of the Metropolitan Sewerage System, establishment and maintenance of necessary working capital and reserves, the requirements of any resolution providing for the issuance of revenue bonds of Metro to finance the acquisition, construction or use of sewerage facilities, plus not to exceed 1% of the foregoing requirements for general administrative overhead costs.

b) To determine the monthly rate per Residential Customer or Residential Customer equivalent to be used during said next succeeding calendar year, the total monetary requirements for disposal of sewage as determined in subparagraph 3(a) of this section shall be divided by twelve and the resulting quotient shall be divided by the total number of Residential Customers and Residential Customer equivalents of all Participants ascertained in accordance with subparagraph 2 of this section for the October-December quarter preceding said July 1st; provided, however, that the monthly rate shall not be less than Two Dollars ($2.00) per month per Residential Customer or Residential Customer equivalent at any time during the period ending July 31, 1972.

c) The monthly sewage disposal charge paid by each Participant to Metro shall be obtained by multiplying the

monthly rate by the number of Residential Customers and Residential Customer equivalents of the Participant determined as provided in Paragraph 2 of this section. An additional charge may be made for sewage or wastes of unusual quality or composition requiring special treatment, or Metro may require pre-treatment of such sewage or wastes. An additional charge may be made for quantities of storm or ground waters entering those Local Sewerage Facilities which are constructed after January 1, 1961 in excess of the minimum standard established by the general rules and regulations of Metro.

4. A statement of the amount of the monthly sewage disposal charge shall be submitted by Metro to each Participant on or before the first day of each month and payment of such charge shall be due on the last day of such month. If any charge or portion thereof due to Metro shall remain unpaid for fifteen days following its due date, the Participant shall be charged with and pay to Metro interest on the amount unpaid from its due date until paid at the rate of 6% per annum, and Metro may, upon failure to pay such amount, enforce payment by any remedy available at law or equity.

5. The City irrevocably obligates and binds itself to pay its sewage disposal charge out of the gross revenues of the sewer system of the City. The City further binds itself to establish, maintain and collect charges for sewer service from every customer receiving such service which will in the aggregate at all times be sufficient to pay all costs of maintenance and operation of the sewer system of the City, including the sewage disposal charge payable to Metro hereunder and sufficient to pay the principal of and interest on any revenue bonds of the City

which shall constitute a charge upon such gross revenues. It is recognized by Metro and the City that the sewage disposal charge paid by the City to Metro shall constitute an expense of maintenance and operation of the sewer system of the City. The City shall provide in the issuance of future sewer revenue bonds of the City that expenses of maintenance and operation of the sewer system of the City shall be paid before payment of principal and interest of such bonds. The City shall have the right to fix its own schedule of rates and charges for sewer service provided that same shall produce revenue sufficient to meet the covenants contained in this Agreement and provided that the customers of the City located within the Metropolitan Area shall be separately classified from those located outside the Metropolitan Area for rate making purposes and the rates for sewer service to customers located within the Metropolitan Area shall fully reflect any lower Metro sewage disposal charge for sewage from customers within the Metropolitan Area.

Section 6. Responsibility of Participant. Each Participant shall be responsible for the delivery to the Metropolitan Sewerage System of sewage collected by such Participant, for the construction, maintenance and operation of Local Sewerage Facilities, and for the payment of all costs incident to the collection of such sewage and its delivery to the Metropolitan Sewerage System.

Section 7. Records. Permanent books and records shall be kept by Metro and the City of the rates established, the volumes of sewage delivered and discharged into the Metropolitan Sewerage System wherever such volumes are measured and the number of Residential Customers and Residential Customer equivalents reported. In addition, Metro shall keep complete books of account showing all costs incurred in connection with the Metropolitan Sewerage System. The records required by this paragraph shall be available for examination by either party at any reasonable time.

Section 8. Development of Metropolitan Sewerage System. It is contemplated that the Metropolitan Sewerage System will be developed in stages and the nature of facilities to be constructed, acquired or used and the time of such construction, acquisition or use shall be determined by Metro, it being contemplated that Metro shall ultimately provide sewage disposal service for the entire Metropolitan Area and such adjacent areas as may feasibly be served into the Metropolitan Sewerage System.

Section 9. Use of City Facilities. Metro shall have the exclusive right to use and the duty to maintain, operate, repair and replace those facilities, the nature and location of which are described in Exhibit "A" attached hereto and by this reference made a part hereof, subject to the continued availability of such facilities or other facilities of Metro to receive, transport or treat sewage delivered at such location by the City.

The right of Metro to use the facilities described in Exhibit "A" shall expire six months following the date of completion as determined by Metro of other metropolitan facilities adequate to replace such temporary facilities. The City shall continue to retain its existing rights of ownership in the facilities described in this Section 9 and shall continue to pay the principal of and interest on any bonds issued to pay in whole or in part the cost of acquisition and construction of such facilities.

Section 10. Insurance and Liability for Damages. The City shall secure and maintain with responsible insurers all such insurance as is customarily maintained with respect to sewage systems of like character against loss of or damage to the sewerage facilities of the City and against public and other liability to the extent that such insurance can be secured and maintained at reasonable cost. Any liability incurred by Metro as a result of the operation of the Metropolitan Sewerage System or the above described temporary facilities shall be the

sole liability of Metro and any liability incurred by the City as a result of the operation of the Local Sewerage Facilities of the City shall be the sole liability of the City.

Section 11. Assignment. Neither of the parties hereto shall have the right to assign this Agreement or any of its rights and obligations hereunder nor to terminate its obligations hereunder by dissolution or otherwise without first securing the written consent of the other party and this Agreement shall be binding upon and inure to the benefit of the respective successors and assigns of the parties hereto. In the event that the City should be dissolved, the local sewer facilities owned and operated by the City within the Metropolitan Area shall by such act of dissolution be assigned and transferred to Metro subject to any outstanding debts of the City incurred for the construction or acquisition of such facilities and subject to the obligation of Metro to continue to provide sewer service to the residents served by such local facilities upon payment of the reasonable costs thereof by the users thereof.

Section 12. Effective Date and Term of Contract. This Agreement shall be in full force and effect and binding upon the parties hereto upon the execution of the Agreement and shall continue in full force and effect for a period of fifty years from the date hereof.

Section 13. Notice. Whenever in this Agreement notice i required to be given, the same shall be given by Registered Mail addressed to the respective parties at the following addresses:

Municipality of Metropolitan Seattle
410 West Harrison Street
Seattle, Washington 98119

City of Bothell
Bothell, Washington

unless a different address shall be hereafter designated in writing by either of the parties.

The date of giving such notice shall be deemed to be the date of mailing thereof. Billings for and payments of sewage disposal costs may be made by regular mail.

Section 14. Execution of Documents. This Agreement shall be executed in six counterparts, any of which shall be regarded for all purposes as one original. Each party agrees that it will execute any and all deeds, instruments, documents and resolutions, or ordinances necessary to give effect to the terms of this Agreement.

Section 15. Waiver. No waiver by either party of any term or condition of this Agreement shall be deemed or construed as a waiver of any other term or condition, nor shall a waiver of any breach be deemed to constitute a waiver of any subsequent breach whether of the same or a different provision of this Agreement.

Section 16. Remedies. In addition to the remedies provided by law, this Agreement shall be specifically enforceable by either party.

Section 17. Entirety. This Agreement supersedes the Agreement for Sewage Disposal dated April 27, 1961, effective as of December 1, 1964, provided that all sewage disposal charges payable thereunder for the period ending November 30, 1964, shall be paid by the City. This Agreement merges and supersedes all prior negotiations, representations and agreements between the parties hereto relating to the subject matter hereof and constitutes the entire contract between the parties concerning the disposal of sewage by the City and acceptance of such sewage by Metro for disposal.

IN WITNESS WHEREOF, the parties have executed this

Agreement as of the day and year first above written.

CITY OF BOTHELL

By _____
Mayor

ATTEST:

_____
City Clerk

MUNICIPALITY OF METROPOLITAN SEATTLE

By _____
C. Carey/Donworth
Chairman of the Council

ATTEST:

_____
Maralyn Sullivan
Clerk of the Council

CITY OF BOTHELL

MUNICIPALITY OF METROPOLITAN SEATTLE

FIRST AMENDMENT TO
AGREEMENT FOR SEWAGE DISPOSAL

THIS AGREEMENT made as of this 3 day of March 1982 between the CITY OF SEATTLE, a municipal corporation of the State of Washington (hereinafter referred to as the "City") and the MUNICIPALITY OF METROPOLITAN SEATTLE, a metropolitan municipal corporation of the State of Washington (hereinafter referred to as "Metro");

W I T N E S S E T H :

WHEREAS, the parties have entered into a long term agreement for Sewage Disposal dated December 1, 1964 (hereinafter referred to as the "Basic Agreement"); and

WHEREAS, the parties now desire to amend said Basic Agreement;

NOW, THEREFORE, it is hereby agreed as follows:

Section 1. Amendment of the Basic Agreement. Section 5 of the Basic Agreement is hereby amended to read as follows:

"Section 5. Payment for Sewage Disposal. For the disposal of sewage collected by the City and delivered to Metro the City shall pay to Metro on or before the last day of each month during the term of this agreement a sewage disposal charge determined as provided in this Section 5.

1. For the quarterly periods ending March 31, June 30, September 30 and December 31 of each year every Participant shall submit a written report to Metro setting forth (a) the number of Residential Customers billed by such Participant for local sewerage charges as of the last day of the quarter, (b) the total number of all customers billed by such Participant as of such day and (c) the total water consumption during such quarter for all customers billed by such Participant other than Residential Customers. The quarterly water consumption report shall be taken from water meter records and may be adjusted to exclude water which does not enter the sanitary facilities of a customer. Where actual sewage flow from an individual customer is metered, the metered sewage flows shall be reported in lieu of adjusted water consumption. The total quarterly water consumption report in cubic feet shall be divided by 2,700 to determine the number of Residential Customer equivalents represented by each Participant's customers other than single family residences. Metro shall maintain a permanent record of the quarterly customer reports from each Participant. The City shall bill every customer receiving sewer service from the City.

2. To form a basis for determining the monthly sewage disposal charge to be paid by each Participant during any particular quarterly period Metro shall ascertain the number of Residential Customers and Residential Customer equivalents of each Participant. This determination shall be made by taking the sum of the actual number of Residential Customers reported as of the last day of the next to the last preceding quarter and the average number of Residential Customer equivalents per quarter reported for the four quarters ending with said next to the last preceding quarter, adjusted to eliminate any Residential Customers or Residential Customer equivalents whose sewage is delivered to a governmental agency other than Metro or other than a Participant for disposal outside of the Metropolitan Area.

3. For each calendar year the monthly sewage disposal charge payable to Metro shall be determined as follows:

a) Prior to July 1st of each year Metro shall determine its total monetary requirements for the disposal of sewage during the next succeeding calendar year. Such requirements shall include the cost of administration, operation, maintenance, repair and replacement of the Metropolitan Sewerage System, establishment and maintenance of necessary working capital and reserves, the requirements of any resolution providing for the issuance of revenue bonds of Metro to finance the acquisition, construction or use of sewerage facilities, plus not to exceed 1% of the foregoing requirements for general administrative overhead costs.

b) To determine the monthly rate per Residential Customer or Residential Customer equivalent to be used said next succeeding calendar year, the total monetary requirements for disposal of sewage as determined in subparagraph 3(a) of this section shall be divided by twelve and the resulting quotient shall be divided by the total number of Residential Customers and Residential Customer equivalents of all Participants ascertained in accordance with subparagraph 2 of this section for the October-December quarter preceding said July 1st.

c) The monthly sewage disposal charge paid by each Participant to Metro shall be obtained by multiplying the monthly rate by the number of Residential Customers and Residential Customer equivalents of the Participant determined as provided in Paragraph 2 of this section. An additional charge may be made for sewage or wastes of unusual quality or composition requiring special treatment, or Metro may require

pretreatment of such sewage or wastes. An additional charge may be made for quantities of storm or ground waters entering those Local Sewerage Facilities which are constructed after January 1, 1961 in excess of the minimum standard established by the general rules and regulations of Metro.

4. A statement of the amount of the monthly sewage disposal charge shall be submitted by Metro to each Participant on or before the first day of each month and payment of such charge shall be due on the last day of such month. If any charge or portion thereof due to Metro shall remain unpaid for fifteen days following its due date, the Participant shall be charged with and pay to Metro interest on the amount unpaid from its due date until paid at the rate of 6% per annum, and Metro may, upon failure to pay such amount, enforce payment by any remedy available at law or equity.

5. The City irrevocably obligates and binds itself to pay its sewage disposal charge out of the gross revenues of the sewer system of the City. The City further binds itself to establish, maintain and collect charges for sewer service from every customer receiving such service which will in the aggregate at all times be sufficient to pay all costs of maintenance and operation of the sewer system of the City, including the sewer disposal charge payable to Metro hereunder and sufficient to pay the principal of and interest on any revenue bonds of the City which shall constitute a charge upon such gross revenues. It is recognized by Metro and the City that the sewage disposal charge paid by the City to Metro shall constitute an expense of maintenance and operation of the sewer system of the City. The City shall provide in the issuance of future sewer revenue bonds of the City that expenses of maintenance and operation of the sewer system of the City shall be paid before payment of principal

and interest of such bonds. The City shall have the right to fix its own schedule of rates and charges for sewer service provided that same shall produce revenue sufficient to meet the covenants contained in this Agreement.

Section 2. Effective Date of Amendment. This Amendment to the Basic Agreement shall be in full force and effect as of March 1, 1981.

Section 3. Basic Agreement Unchanged. Except as otherwise provided in this Agreement, all provisions of the Basic Agreement shall remain in full force and effect.

IN WITNESS WHEREOF, the parties hereto have executed this First Amendment as of the day and year first written above.

CITY OF BOTHELL

Jerald L. Osterman

Jerald L. Osterman, City Manager

ATTEST:

Betty Keeney

Betty Keeney, City Clerk

MUNICIPALITY OF METROPOLITAN SEATTLE

Neil Peterson

Neil Peterson
Executive Director

ATTEST:

Maureen Varni

Maureen Varni
Clerk of the Council

DUPLICATE ORIGINAL

CITY OF BOTHELL

MUNICIPALITY OF METROPOLITAN SEATTLE

EXTENSION OF AGREEMENT FOR SEWAGE DISPOSAL

WHEREAS, the City of Bothell (the "City") and the Municipality of Metropolitan Seattle (the "Municipality") are parties to a certain Agreement for Sewage Disposal (the "Agreement") dated December 1, 1964, as amended, pursuant to which the City delivers to the Municipality for treatment and disposal all the sewage and industrial wastes it collects from its service area; and

WHEREAS, the Agreement expires by its terms on December 2014; and

WHEREAS, it is in the best interests of the City and the Municipality that the expiration date of the Agreement be extended in order to allow the Municipality to sell and issue its sewer revenue bonds with maturities extending beyond 2014;

NOW, THEREFORE, in consideration of the mutual covenant contained herein and in the Agreement, it is hereby agreed as follows:

The Agreement for Sewage Disposal between the City of Bothell and the Municipality of Metropolitan Seattle dated December 1, 1964, as amended, is hereby extended for a period of twenty-two and one-half years and shall continue in full force and effect until July 1, 2036.

10/15 send the Mello for signature

Solp. 1985-203

re AB 85-12

It is further agreed that all other provisions of said Agreement shall remain unchanged, and the Agreement dated December 1, 1964, as amended, as extended herein shall constitute the entire Agreement for Sewage Disposal between the parties.

DATED: This 15th day of October, 1985

CITY OF BOTHELL

By _____

ATTEST:

_____
City Clerk

MUNICIPALITY OF METROPOLITAN SEATTLE

By _____
Gary Zimmerman
Chairman of the Council

ATTEST:

_____
Bonnie Mattson
Clerk of the Council

ALDERWOOD AGREEMENT

Res #1607-

A G R E E M E N T

AGREEMENT made and entered into this 17th day of March, 1969, by and between CITY OF BOTHELL, a municipal corporation in King County, Washington, and ALDERWOOD WATER DISTRICT, a municipal corporation operating within the limits of Snohomish County, Washington, hereinafter called CITY and DISTRICT, respectively,

WITNESSETH:

WHEREAS, CITY has called for bids for the constructio of a sanitary sewer line known as the Hollyhills Sewer, specifying two alternates in its call; and,

WHEREAS, alternate one of two alternates is based upon a design sufficient in size to accommodate anticipated future needs of DISTRICT for delivery of sewage within the limits of DISTRICT; and,

WHEREAS, the lowest qualified bidder in the bid opening on said project was HAROLD KAESER COMPANY of Seattle, and CITY is desirous of awarding the bid to said company at its next regular meeting to be held March 17, 1969, and is willing to award a contract to said company based upon alternate one if DISTRICT is willing to pay to CITY the difference between alternate one and two, plus the usual contingency, which differential amounts to $31,000.00; and,

WHEREAS, DISTRICT has indicated its willingness to pay CITY such differential if CITY will award the contract for th construction of the first alternate,

COOPER & LYDERSON
201 REALTY BUILDING
EVERETT, WASHINGTON 98201
ALPINE 9-1159

NOW, THEREFORE, IT IS AGREED AS FOLLOWS:

I.

The DISTRICT shall pay to the CITY the sum of Thirty One Thousand Dollars ($31,000.00) within sixty (60) days after the 17th day of March, 1969.

II.

The CITY will enter into a contract with HAROLD KAESER COMPANY of Seattle for the alternate design providing for the increased size of sewer pipe to accommodate the future needs of the DISTRICT, not to exceed two million gallons per day, and cause the same to be constructed within a reasonable period of time.

III.

The CITY agrees that it will accept from the DISTRICT at a point approximately one mile south of the King County boundary line all sewage developed by the DISTRICT from its sewer system not to exceed two million gallons per day, and will deliver said sewage so accepted to the system of Municipality of Metropolitan Seattle, herein referred to as METRO. The DISTRICT shall pay to METRO all charges for acceptance of sewage developed and delivered to said line by the DISTRICT.

IV.

The DISTRICT shall pay to the CITY its fair prorated share of the costs of maintenance and operation of the sewer line herein based upon the number of dwelling units that the district shall be serving and delivery to said line in proportion to the number of dwelling units or equivalent units that the said sewer line shall be serving. Dwelling units shall be in accordance with the definition of units as set forth by METRO pursuant to its contract with the CITY.

COOPER & LYDERSON
201 REALTY BUILDING
EVERETT, WASHINGTON 98201
ALPINE 9-1159

IV.

It is necessary for the DISTRICT to construct a pumping station to place its sewage in said line, and in the event the CITY shall desire to use said pumping station, then in that event the CITY will share with the DISTRICT the cost of maintenance and operation of said pumping station in the same manner as the costs are shared in operation of the sewer line as provided in Paragraph III. The DISTRICT shall maintain said pumping station at all times and the CITY said sewer line, all subject to the provisions as herein set forth.

In the event the DISTRICT shall terminate delivery of sewage to said sewer line, arrangements will be made between the DISTRICT and the CITY for the acquisition of said pumping station by the CITY if the CITY shall so desire, based on depreciated value.

IN WITNESS WHEREOF, the parties by and through their duly elected officials have executed this Agreement after authority to do so was given at a regular meeting of the respective bodies.

CITY OF BOTHELL

By _____
Mayor

Attest:

_____
City Clerk

ALDERWOOD WATER DISTRICT

By _____
President

Attest:

_____
Secretary

COOPER & LYDERSON
201 REALTY BUILDING
EVERETT, WASHINGTON 98201
ALPINE 9-1159

Please return

AGREEMENT

AGREEMENT made this 7th day of April, 1969, by and between CITY OF BOTHELL, a municipal corporation of the third class located in King County, Washington, and ALDERWOOD WATER DISTRICT, a municipal corporation located and operating within the limits of Snohomish County, Washington, witnesseth:

WHEREAS the City of Bothell heretofore caused to be constructed certain sanitary sewer facilities in Snohomish County, Washington shown on the drawing attached hereto prepared by Gray & Osborne, Consulting Engineers, dated January 30, 1968, as "existing" sewer; and

WHEREAS subsequent to the construction of such facilities within Snohomish County by the City of Bothell, Alderwood Water District has acquired jurisdiction to serve said areas with sanitary sewer facilities; and

WHEREAS said district is not now and will not in the near future be able to provide sanitary sewer facilities to serve the areas presently served by the City of Bothell, nor those areas included within the gray hatched lines shown on the attached drawing, and the parties hereto have reached agreement relative to providing sanitary sewer facilities to the areas within said gray hatched lines, which area is particularly described in Appendix A attached hereto, therefore

IN CONSIDERATION of the mutual benefits accruing herefrom, the above named parties do agree as follows:

1. The City of Bothell may construct and maintain sanitary sewer facilities consisting of trunks, laterals, manholes and pumping stations required to serve the area described in Appendix A attached hereto, and depicted by the drawing attached hereto, with sanitary sewer facilities.

2. Upon the construction and placing in service of the proposed "North Creek Trunk Line" by Alderwood Water District, and

ongoing until Alderwood builds sewer line of Eagle
ok

when service lines are constructed by said district therefrom to serve the area described in Appendix A attached, then after written notice by the district to the City that such lines are in service, given at least 180 days prior to the proposed cut-off date, then service to the area described in Appendix A attached by the City shall cease, and the right to serve such area by the district shall commence; PROVIDED that the District shall not have the right to serve such area sooner than five (5) years after the date of this agreement.

3. Nothing herein contained shall be construed to impair any obligation of the City under that certain contract dated June 1966 between the City and Northshore School District No. 417, entered into pursuant to the Muncipal Water and Sewer Facilities Act providing for reimbursement to said school district of charges collected by the City for tapping onto the existing sewer facilities depicted on the attached drawing; and the district specifically agrees to undertake the obligations imposed by said contract on the City in the event the district should take over and provide service to the area described on Appendix A within the term of said contract.

4. This contract is not intended by the parties to cover the acquisition from the City by the district of any sanitary sewer facilities presently existing or which may be constructed in the area described in Appendix A by the City prior to the date the district starts to furnish service to such area; and any such acquisition of facilities owned by the City therein is expressly reserved for subsequent agreement of the parties.

5. Subject to the limitations provided in Paragraph 2 hereof, it is agreed that when the district is in a position to serve the area described on Appendix A, the district will take over the facilities located within said area including all of the lateral lines, but will be bound to perform as though it were an original

party, all contracts theretofore entered into by the City under the Municipal Water and Sewer Facilities Act (R.C.W. 35.91.010, et seq.) which are then in force, and which in any manner affect the area described on Appendix A; and in addition will pay to the City such sum as represents the cost to City of all lateral lines taken over by the district, which were theretofore installed by the City at its expense, less normal depreciation. The district further agrees that the area described in Appendix A where sewer lines are installed will not be assessed for the cost of such lateral lines theretofore installed, and will only be assessed for that portion of the major trunk system, which assessment may be spread over the whole drainage area, including the property herein described, and then only to the extent that the property is specially benefited by such improvements.

IN WITNESS WHEREOF, the parties by and through their duly elected officials, have executed this agreement after authority to do so given at a regular meeting of the respective bodies.

CITY OF BOTHELL

BY N E Sundstrom
Mayor

ATTEST:

Frances Hansen
City Clerk

ALDERWOOD WATER DISTRICT

BY

BY

BY John W. Mill

CITY OF BOTHELL
DEPARTMENT OF PUBLIC WORKS
ROUTE TO: DIR. ENGR. INSP. ADMIN.
RECEIVED
FEB 28 1990
FILE NO.
COPY TO MGR. ATT. CLERK TREAS. POLICE FIRE PLNG.

CITY OF BOTHELL

MUNICIPALITY OF METROPOLITAN SEATTLE

DUPLICATE ORIGINAL

AMENDMENT TO AGREEMENT
FOR SEWAGE DISPOSAL

THIS AMENDMENT made as of the 2nd ~~20th~~ day of ~~February~~ October, 1992 ~~1990~~ between the City of Bothell, a municipal corporation of the State of Washington (hereinafter referred to as the "City") and the Municipality of Metropolitan Seattle, a metropolitan municipal corporation of the State of Washington (hereinafter referred to as "Metro");

WITNESSETH:

WHEREAS, the parties have entered into a long term Agreement for Sewage Disposal dated December 1, 1964 , as amended (hereinafter referred to as the "Basic Agreement"); and

WHEREAS, an advisory committee composed of elected and appointed officials in the metropolitan area was appointed by the Metropolitan Council to examine the structure of Metro's charges to its participants; and

WHEREAS, said advisory committee, following extensive research, study and deliberations, has recommended certain changes in the structure of Metro's charges to its participants and implementation of said changes requires amendment of the Basic Agreement; and

WHEREAS, the parties have determined that the recommendations are in the best public interest and therefore desire to amend said Basic Agreement to implement said recommendations;

NOW, THEREFORE, it is hereby agreed as follows:

Section 1. Amendment of Section 5 of the Basic Agreement. Section 5 of the Basic Agreement is hereby amended to read as follows:

"Section 5. Payment for Sewage Disposal. For the disposal of sewage hereafter collected by the City and delivered to Metro the City shall pay to Metro on or before the last day of each month during the term of this Agreement, a sewage disposal charge determined as provided in this Section 5.

1. For the quarterly periods ending March 31, June 30, September 30 and December 31 of each year every Participant shall submit a written report to Metro setting forth:

(a) the number of Residential Customers billed by such Participant for local sewerage charges as of the last day of the quarter,

(b) the total number of all customers billed for local sewerage charges by such Participant as of such day, and

(c) the total water consumption during such quarter for all customers billed for local sewerage charges by such Participant other than Residential Customers.

The quarterly water consumption report shall be taken from water meter records and may be adjusted to exclude water which does not enter the sanitary facilities of the customer. Where actual sewage flow from an individual customer is metered, the metered sewage flows shall be reported in lieu of adjusted water consumption. The total quarterly water consumption report in cubic feet shall be divided by 2,250 to determine the number of Residential Customer equivalents represented by each Participant's customers other than single family residences. Metro shall maintain a permanent record of the quarterly customer reports from each Participant.

The City's first quarterly report shall cover the first quarterly period following the date when sewage is first delivered to Metro and shall be submitted within thirty days following the end of the quarter. Succeeding reports shall be made for each quarterly period thereafter and shall be submitted within thirty (30) days following the end of the quarter.

2. (a) To form a basis for determining the monthly sewage disposal charge to be paid by each Participant during any particular quarterly period, Metro shall ascertain the number of Residential Customers and Residential Customer equivalents of each Participant. This determination shall be made by taking the sum of the actual number of Residential customers reported as of the last day of the next to the last preceding quarter and the average number of Residential Customer Equivalents per quarter reported for the four quarters ending with said next to the last preceding quarter, adjusted for each Participant to eliminate any Residential Customers or Residential Customer equivalents whose sewage is delivered to a governmental agency other than Metro or other than a Participant for disposal outside of the Metropolitan Area.

(b) For the initial period until the City shall have submitted six consecutive quarterly reports, the reported number of Residential Customers and Residential Customer equivalents of the City shall be determined as provided in this subparagraph (b). On or before the tenth day of each month beginning with the month prior to the month in which sewage from the City is first delivered to Metro, the City shall submit a written statement of the number of Residential Customers and Residential Customer equivalents estimated to be billed by the City during the next succeeding month. For the purpose of determining the basic reported number of Residential Customers and Residential Customer equivalents of

the City for such next succeeding month, Metro may at its discretion adopt either such estimate or the actual number of Residential Customers and Residential Customer equivalents reported by the City as of the last day of the next to the last preceding reported quarter. After the City shall have furnished six consecutive quarterly reports the reported number of Residential Customers and Residential Customer equivalents of the City shall be determined as provided in the immediately preceding subparagraph (a).

(c) If the City shall fail to submit the required monthly and/or quarterly reports when due, Metro may make its own estimate of the number of Residential Customers and Residential Customer equivalents of the City and such estimate shall constitute the reported number for the purpose of determining sewage disposal charges.

3. The monthly sewage disposal charge payable to Metro shall be determined as follows:

(a) Prior to July 1st of each year Metro shall determine its total monetary requirements for the disposal of sewage during the next succeeding calendar year. Such requirements shall include the cost of administration, operation, maintenance, repair and replacement of the Metropolitan Sewerage System, establishment and maintenance of necessary working capital and reserves, the requirements of any resolution providing for the issuance of revenue bonds of Metro to finance the acquisition, construction or use of sewerage facilities, plus not to exceed 1% of the foregoing requirements for general administrative overhead costs.

(b) To determine the monthly rate per Residential Customer or Residential Customer equivalent to be used during said next succeeding calendar year, the total monetary requirements for disposal of sewage as determined in subparagraph 3(a) of this section shall be divided by twelve and the resulting quotient shall be divided by the total

number of Residential Customers and Residential Customer equivalents of all Participants for the October-December quarter preceding said July 1st; provided, however, that the monthly rate shall not be less than Two Dollars ($2.00) per month per Residential Customer or Residential Customer equivalent at any time during the period ending July 31, 1972.

(c) The monthly sewage disposal charge paid by each Participant to Metro shall be obtained by multiplying the monthly rate by the number of Residential Customers and Residential Customer equivalents of the Participant. An additional charge may be made for sewage or wastes of unusual quality or composition requiring special treatment, or Metro may require pretreatment of such sewage or wastes.

4. The parties acknowledge that, by resolution of the Metropolitan Council, Metro may impose a charge or charges directly on the future customers of a Participant for purposes of paying for capacity in Metropolitan Sewage Facilities and that such charges shall not constitute a breach of this agreement or any part thereof. The proceeds of said charge or charges, if imposed, shall be used only for capital expenditures or defeasance of outstanding revenue bonds prior to maturity.

In the event such a charge or charges are imposed, the City shall, at Metro's request, provide such information regarding new residential customers and residential customer equivalents as may be reasonable and appropriate for purposes of implementing such a charge or charges.

5. A statement of the amount of the monthly sewage disposal charge shall be submitted by Metro to each Participant on or before the first day of each month and payment of such charge shall be due on the last day of such month. If any charge or portion thereof due to Metro shall remain unpaid for fifteen days following its due date, the Participant shall be charged with and pay to Metro interest on

the amount unpaid from its due date until paid at the rate of 6% per annum, and Metro may, upon failure to pay such amount, enforce payment by any remedy available at law or equity.

6. The City irrevocably obligates and binds itself to pay its sewage disposal charge out of the gross revenues of the sewer system of the City. The City further binds itself to establish, maintain and collect charges for sewer service which will at all times be sufficient to pay all costs of maintenance and operation of the sewer system of the City, including the sewage disposal charge payable to Metro hereunder and sufficient to pay the principal of and interest on any revenue bonds of the City which shall constitute a charge upon such gross revenues. It is recognized by Metro and the City that the sewage disposal charge paid by the City to Metro shall constitute an expense of the maintenance and operation of the sewer system of the City. The City shall provide in the issuance of future sewer revenue bonds of the City that expenses of maintenance and operations of the sewer system of the City shall be paid before payment of principal and interest of such bonds. The City shall have the right to fix its own schedule of rates and charges for sewer service provided that same shall produce revenue sufficient to meet the covenants contained in this Agreement.

Section 2. Amendment of Section 6 of the Basic Agreement. Section 6 of the Basic Agreement is hereby amended to read as follows:

"Section 6. Responsibility of the City. The City shall be responsible for the delivery to the Metropolitan Sewerage System of sewage collected by the City, for construction, maintenance and operation of Local Sewerage Facilities, and for the payment of all costs incident to the collection of such sewage and its delivery to the Metropolitan Sewerage System.

In addition, the City will undertake continual rehabilitation and replacement of its local sewage facilities for purposes of preventing, reducing and eliminating the entry of extraneous water into such facilities and will expend annually, averaged over five (5) years, an amount equal to two (2) cents per inch of diameter per foot of its local sewage facilities, excluding combined sewers and force mains, for said rehabilitation and replacement. The amount of this expenditure requirement may be increased from time to time by the Metropolitan Council to reflect general inflation. Rehabilitation and replacement projects undertaken pursuant to this section shall be constructed in accordance with criteria adopted by the Metropolitan Council and included in Metro's Rules and Regulations. In the event the City fails to comply with the rehabilitation and replacement expenditure requirements described in this section, the City shall pay such charge as may be determined by Metro for quantities of storm or ground water entering its Local Sewage Facilities in excess of the minimum standard established by the general Rules and Regulations of Metro.

Section 3. Amendment of Basic Agreement to Add a New Section. A new Section 18 shall be added to the Basic Agreement to read as follows:

"Section 18. Future Amendments. The City agrees to amend and hereby concurs in any amendment to this agreement which incorporates any changes in the terms for sewage disposal and/or payment therefor as may be proposed by Metro and agreed to by those Participants that shall represent, in total, not less than 90% of the Residential Customers and Residential Customer Equivalents then served by the Metropolitan Sewerage System."

Section 4. Effective Date of Amendment. This amendment shall take effect at the beginning of the first

quarter following the date first written above with quarters beginning January 1, April 1, July 1, and October 1.

Section 5. Basic Agreement Unchanged. Except as otherwise provided in this amendment, all provisions of the basic agreement shall remain in full force and effect as written therein.

IN WITNESS WHEREOF, the parties have executed this Agreement as of the day and year first written above.

CITY OF BOTHELL

Anne Pflug, City Manager

ATTEST:

Donna Sommerfeld, Deputy City Clerk

MUNICIPALITY OF METROPOLITAN SEATTLE

~~Gary Zimmerman~~
Chair of the Council

MAY 22 1992

ATTEST:

WOODCREST AGREEMENT

#1

AGREEMENT

MUTUAL AGREEMENT between WOODCREST PLANNERS, a Partnership, in the County of King, State of Washington, hereinafter referred to as "Woodcrest"; CITY OF BOTHELL, a municipal corporation, located in King County, State of Washington, hereinafter referred to as "The City", and PUGET SOUND MUTUAL SAVINGS BANK, a banking corporation organized under the laws of the State of Washington, hereinafter referred to as "The Bank".

IN CONSIDERATION of the mutual covenants herein contained, the abovenamed parties agree to the following conditions of this Agreement which is hereby established to fulfill the requirements of the Bothell PUD Ordinance and the conditions on the Woodcrest PUD as established by The City Council of The City of Bothell.

A. Woodcrest agrees:

1. To establish three (3) escrow accounts in Puget Sound Mutual Savings Bank, downtown branch. The first account will cover storm drainage and retention as indicated on the plans on file with The City in the amount of One Hundred Fifty-eight Thousand Twenty Eight Dollars ($158,028). The second escrow account will cover public improvements and utilities and landscaping as defined by the plans on file with The City in the amount of Two Hundred Thirty-eight Thousand Four Hundred Eighty-six Dollars ($238,486). The third escrow account will cover the offsite sewer as indicated in the conditions established by The City Council of the City of Bothell and in the amount of One Hundred Twenty Thousand ($120,000).

2. If, after final review by The City Engineer, these cost estimates are deemed low, then Woodcrest agrees to add funds to the different accounts, if The City is not

1/24/78

arbitrary and capricious in its figures.

Said final review is estimated to be _____ days from the date of this Agreement.

3. In addition, the amounts in escrow shall be raised or lowered as determined by the bids received from reputable contractors if accepted and used by Woodcrest and approved by The City.

4. That a maximum of ten (10%) per cent of the escrow account established to cover the cost of physical improvements shall remain in the account until the last payment is requested, and said percentage shall be disbursed with the last payment. Other payments shall be made on the basis of the percentage of work satisfactorily completed, as stated in paragraph B-3 of this Agreement.

B. The Bank agrees:

1. That the sum of $158,028 has been established in an escrow account for the purpose of installing storm drainage and retention system, as indicated on the plans on file with The City and shall only be used to install said improvements.

That the sum of $238,486 has been established in an escrow account for the purpose of installing all public improvements, utilities, and all landscaping portions of the final development plan as indicated on the plans on file with The City, and shall only be used to install said improvements.

That the sum of $120,000 has been established in an escrow account for the purpose of installing the offsite sewer improvements, as indicated in the conditions set by the City Council of The City of Bothell and shall only be used to install the said improvements.

2. To withhold a maximum of ten (10%) per cent of the escrow account established to cover the costs of the required improvements which shall be disbursed with the final payment.

3. To disburse from funds in the said three accounts on

a basis of percentage of improvements satisfactorily completed, but, no more frequently than monthly.
This percentage shall be determined based upon the itemized cost figures dated above and shall be the lesser of the percentages estimated by The Bank and the Bothell City Engineer and/or its appointee.

SEE ADDENDUM - Page 3a.

4. Not to disburse any money from said account until The Bank has received written notice from The City Engineer or its appointee that a specified percentage of the required improvements has been satisfactorily completed and approved by The Bothell City Engineer, or its appointee.

C. The City agrees:

1. To accept this Agreement in lieu of a performance bond or in lieu of the completed improvements required in The PUD Ordinance and conditions established by The City Council.

2. To have the City Engineer or its appointee periodically inspect said improvements while under construction and inspect completed improvements within five (5) days after receiving written notice that the improvement item has been completed. The City Engineer or its appointee shall notify the Bank and Woodcrest within ten (10) days after receipt of notice, as stated above, and as to the percentage of improvements completed.

SEE ADDENDUM - Page 3a.

THE CITY OF BOTHELL

BY: _____

Date _____

WOODCREST PLANNERS

BY: _____
WARREN OTTESON, Authorized Partner

Date 1/24/78

PUGET SOUND MUTUAL SAVINGS BANK

BY: _____

Date 1-24-78

ADDENDUM

B. 3(a) If Woodcrest or any of its retained subcontractors fails and refuses to correct construction deficiencies in relation to the plans as now submitted, or will be submitted in the future, then the Bank will pay to the City of Bothell so much of those funds as are necessary (up to the limit of the escrow accounts) to correct these deficiencies, by the most economical method. This paragraph is to insure to The City that the storm drainage and retention system, the public improvements, utilities, landscaping and offsite sewer are completed according to plans submitted to and approved by the City of Bothell.

C. 3. As between the Bank and the City, at such time as the City Engineer certifies that any given phase of the required improvements is 100% complete, this Agreement shall ~~be null and void~~ terminate as to such phase of the improvements.

3

CONTRACT

WHEREAS, the CITY OF BOTHELL (hereinafter referred to as "Bothell"), and WOODCREST PLANNERS, a Washington partnership, (hereinafter referred to as "Woodcrest"), are desirous of settling all potential differences in one of two alternative manners, as selected by the City, as set forth below;

NOW, THEREFORE, in consideration of the mutual covenants herein contained, the parties agree as follows:

ALTERNATIVE NO. 1

If the City of Bothell and Woodcrest can agree with Water District No. 104 on a sewer connection into Water District No. 104's facilities, at the City's option, then:

(1) Woodcrest will construct an 8" sewer line from Chausee Lumber sewer connection on East Riverside Drive to manhole 75 in Water District No. 104's sewer facilities.

(2) Said construction to be to the specifications of Bothell and Water District No. 104, and shall be completed within 120 days of the City's acceptance of this agreement and selection of this alternative.

(3) Bothell will refund to Woodcrest the sewer facility charges Woodcrest has paid to Bothell and accept the above described improvements in lieu thereof.

ALTERNATIVE NO. 2

(1) Woodcrest will purchase, regardless of cost, in accordance and compliance and pursuant to the terms of Reid, Middleton & Associates, Inc., letter addressed to Mr. Ted Uomoto, dated August 31, 1978, a copy of which is attached hereto and hereby incorporated by

9/7/78
cc: [illegible]
[illegible]
City attorney

9/7/78

this reference, a package lift station, and install into present lift station No. 3. Specifications of said lift station are to be agreed upon by Bothell's City Engineer, and Woodcrest's Engineer, John Phillips. Said package lift station to be installed to Bothell standards and dedicated to Bothell when accepted by it.

(2) Woodcrest, at its own cost, will construct an 8" sewer line across the Sammamish River, underneath the pedestrian bridge, and to the Bothell manhole and sewer line approximately 70' from the north end of the pedestrian bridge. Said sewer line to be installed to Bothell's standards and in accordance with the provisions of the Reid, Middleton & Associates, Inc., letter of August 31, 1978, and dedicated to Bothell when accepted by it. Said construction shall be completed within 120 days of the City's acceptance of this agreement and selection of this alternative. Woodcrest agrees to obtain all necessary easements for the installation of said sewer lines and shall bear all costs necessary to obtain the same.

(3) Bothell will credit Woodcrest the amount Woodcrest paid to the City of Bothell for sanitary sewer facility charges and accept the above described improvements in lieu thereof.

(4) The Shorelines Management Permit contains permission for the sewer line to cross the Sammamish River.

(5) The following agreements shall be in effect whether Alternative No. 1 or Alternative No. 2 is followed:

a. Woodcrest will construct the following additional water facilities:

1. Water Meter Station - North end of project. This station is not required by the City. Woodcrest is to install, at their own expense, to prevent future digups and incumbent inconvenient problems to the widened portion of 120th Avenue Northeast, the estimated value of which is determined as follows:

Contractor's bid price for vault	$ 6,500.00
8" water main - 100' at $12.00/foot	1,200.00
Sub total	$ 7,700.00
Sales tax	415.80
Total	$ 8,115.80

2. PRV Station - In conformance with Bothell's comprehensive water plan, Woodcrest is installing a PRV Station at the intersection of Woodcrest Land and 118th Avenue Northeast. The alternative design is to install individual PRVs at 26 mobile home units. The only reason for PRV is to enable Bothell to utilize this water source for emergency purposes so it will match Bothell's pressure zones, the estimated value of which is determined as follows:

Contractor's bid for PRV Station	$ 7,000.00
Credit for individual PRV 25 at $35.00	- 910.00
Sub total	$ 6,090.00
Sales tax	+ 328.00
Total	$ 6,418.86

The above items will be or have been installed at Woodcrest's expense regardless of cost and shall be completed within 90 days of execution of this agreement by the City.

b. Woodcrest will contract with the City of Bothell to purchase water from the City at a rate charged by Water District No. 79, plus a reasonable markup for administrative charges.

c. In said Contract with the City of Bothell, Woodcrest will agree to indemnify, defend and hold the City of Bothell harmless as follows: Woodcrest agrees to indemnify, defend and hold the City of Bothell harmless from claims against Water District No. 79 and from any and all of the following claims and from any and all expenses, attorneys fees and costs incurred by the City of Bothell or Water District No. 79:

1. Arising out of any action (other than the actions indicated in paragraph c of this paragraph) taken by the City of Bothell which relates in any way to supplying water under this Agreement;

2. Made by or on behalf of customers residing within the geographical limits of Woodcrest Estates against Water District No. 79 which relate in any way to supplying water under this Agreement; and,

3. The hold harmless agreement shall not hold the City of Bothell harmless for claims arising out of any use, including emergency use for fire purposes, of this line

by the City of Bothell beyond the use by the 158 hookups anticipated in the Woodcrest Estates mobile home park.

d. Bothell will credit the sum of $10,000.00 of water facilities charges to Woodcrest for the additions above referred to in the Bothell Water System.

e. Bothell will grant to Woodcrest the right to receive a latecomer's charge in proportion to Bothell's reimbursement of sewer facilities charges and construction costs. (i.e., if Bothell, in Alternative No. 1, contributes $20,000.00 in sewer facilities charges and Woodcrest contributed $65,000.00 in construction costs, Bothell will receive 23.53% of latercomer's charges. The actual percentage is to depend on the actual construction cost.) In the case of Alternative No. 2, Woodcrest would be allowed the same formula for reimbursement. The wording of the reimbursement for the latecomer's charge shall be in a separate document.

f. The City of Bothell will not require building permits of Woodcrest for each individual mobile home which has met State of Washington standards, nor for each individual pit for the mobile homes. A building permit is required for the clubhouse installation. The City of Bothell has not adopted standards or chosen to regulate or set standards for mobile home sites at this time, and will not inspect any of the mobile home pits or the mobile homes. In addition, Woodcrest will not require the City of Bothell to inspect any of the mobile home pits or mobile homes. Woodcrest

will execute a hold harmless and indemnity agreement to the City of Bothell against any and all claims by it or by third parties against the City of Bothell for failure to inspect the mobile home pits or mobile homes.

g. Whether Alternative No. 1 or Alternative No. 2 is used, Bothell will allow not more than 35 units to be hooked up to the present sewer system until the alternate accepted is operable and accepted by the City. Woodcrest shall proceed with all due diligence immediately upon one of the Alternatives having been selected by the City. Woodcrest agrees to pay for the additional maintenance for the sewerage and pump stations if such occurs as a result of the permission granted herein to connect up to 35 units on to the present sewer system prior to the selected alternative being constructed, operable and accepted by the City from November 1, 1978, forward until the alternate has been constructed as operable and accepted by the City. The City of Bothell will use every effort to facilitate Woodcrest's construction of the offsite sewer facility.

h. Woodcrest covenants and agrees that it will proceed to dismiss its lawsuit against the City of Bothell on Ordinance 858, with prejudice, and without cost to either party, and pay the sum of $200.00 per unit in lieu of park fees. The procedure for payment of said fee will be to use the $5,000.00 cash bond that is presently posted and Woodcrest agrees to submit a weekly report to

the City of Bothell as to the number of homes and pay any difference at the time the report is submitted.

DATED this 1st day of September, 1978.

Warren Otteson, authorized to sign as Partner for WOODCREST PLANNERS

DATED this 7th day of September, 1978.

CITY OF BOTHELL

By

STATE OF WASHINGTON)
) ss:
COUNTY OF KING')

On this 1st day of September, 1978, before me, the undersigned, a Notary Public in and for the State of Washington, duly commissioned and sworn, personally appeared WARREN OTTESON, to me known to be the authorized partner to sign the foregoing agreement, of WOODCREST PLANNERS, who executed the foregoing instrument, and acknowledged the said instrument to be the free and voluntary act and deed of said corporation, for the uses and purposes therein mentioned, and on oath stated that they were authorized to execute the said instrument and that the seal affixed is the corporate seal of said corporation.

WITNESS my hand and official seal hereto affixed the day and year first above written.

Robert E. Corning
Notary Public in and for the State of Washington, residing at Bothell.

SUPPLEMENT TO AGREEMENT

WHEREAS, the CITY OF BOTHELL (hereinafter referred to as BOTHELL) and WOODCREST PLANNERS (hereinafter referred to as WOODCREST) entered into an Agreement on September 7, 1978, allowing WOODCREST to hookup 35 mobile home units to the present Bothell Sewer System, and

WHEREAS, WOODCREST is unable to install the offsite sewer system at the present time with one of the reasons being the need for the CITY OF BOTHELL to obtain permission from King County to cross the Sammamish River, and

WHEREAS, the consulting engineer for the CITY of BOTHELL has investigated the system and has concluded that it should not jeopardize the city sewer system nor cause extra expense for maintenance if WOODCREST agrees to conditions expressed in this contract;

THEREFORE, in consideration of the mutual covenants herein contained, the parties agree as follows:

(1) WOODCREST shall be allowed to connect 20 additional occupied mobile home units to the present BOTHELL sewer system upon the following terms and conditions:

(2) WOODCREST shall contract with a septic tank pumping company that can provide for emergency pumping of the three pump stations or manholes as required. Said pumping to be at WOODCREST'S cost. In addition, WOODCREST hereby authorizes the CITY OF BOTHELL to order emergency pumping service from said company as it deems necessary up to a limit of $2,000.00 without further authorization from WOODCREST. The pumping service shall be available on a 24 hour basis, seven days a week, with a response time of two hours or less. If the designated pumping service is not available, BOTHELL may order another septic service at WOODCREST'S costs to

perform emergency pumping, (not to exceed $2,000.00).

(3) WOODCREST will agree to pay for the extra monitoring and inspection by the consulting engineers or City staff as required by the CITY. The additional monitoring by City staff is estimated to be three-fourths of a staff day per week. If the WOODCREST system adds unusual loads or othrewise causes an overload, the additional staff hours required to correct the system will be paid by WOODCREST at the above rate. WOODCREST will pay for the engineering costs related to the supervision of maintenance crews, monitoring flow, and cleaning lines. WOODCREST will pay all costs incurred by the City including staff time, consulting engineer's time and attorneys' fees directly related to the obtaining of this agreement through December 31, 1978. WOODCREST will pay all costs incurred by the CITY OF BOTHELL including staff time, consulting engineer's time, attorneys' fees relating to this Agreement, after December 31, 1978, not to exceed $2,000.00.

(4) WOODCREST agrees to pay one-half the cost of replacing the 8" sewer line between manhole #3 and manhole #4 (Sheet L-10). This 160' of 8" line is a major problem area and has caused frequent stoppage. The estimated cost of replacing this 8" line is $3,200.00. The CITY shall pay one-half of the actual construction and material costs not to exceed $1,600.00, including plans. The rest of the cost shall be born by WOODCREST. CITY is to provide permits at no cost to WOODCREST. CITY is to provide the easements necessary for replacing the line. WOODCREST will install the line to City standards and specifications and the line must be inspected by the City. In the event CITY is unable to provide ~~plans and~~ easements necessary by the time the offsite utility system is ready to be constructed, this provision shall not be applicable.

(5) WOODCREST will pay for the cost of cleaning and flushing the lines that have silted up due to the stormwater infiltration allowed by WOODCREST over the past couple of months and supervision of the same. Cleaning, rodding and flushing will be under the supervision of Giaudrone & Strong.

(6) WOODCREST will apply ahead of time to the CITY OF BOTHELL to acquire approval to allow occupancy of each mobile home to be connected to the system above 35. Lot location for the individual unit must receive prior approval by the City.

(7) In the event there are any enforcement problems with this Agreement, WOODCREST will pay the CITY OF BOTHELL attorneys' fees and costs in obtaining enforcement, including the necessary court orders.

(8) This Agreement is to be considered an Addendum to that certain Contract entered into between the parties on September 7, 1978 dealing with offsite sewer facilities and does not release the parties of the obligations described therein. However, once the installation of the offsite sewer facilities contemplated in the September 7, 1978, agreement is completed and accepted by the CITY, WOODCREST'S duty under this Supplemental Agreement shall cease.

(9) In addition, WOODCREST shall hold the CITY OF BOTHELL harmless from any and all damages, costs or liabilities, caused by the additional inflow of WOODCREST units on the present sewer system.

DATED this 9th day of January, 1979.

WOODCREST PLANNERS

Warren J. Otteson

WARREN OTTESON, authorized to sign as Partner for WOODCREST PLANNERS, a Washington Partners

CITY OF BOTHELL:

by Jerald L Osterman

DATED: January 15, 1979

APPENDIX B

SEPA CHECKLIST

SEPA ENVIRONMENTAL CHECKLIST

Purpose of checklist:

Governmental agencies use this checklist to help determine whether the environmental impacts of your proposal are significant. This information is also helpful to determine if available avoidance, minimization or compensatory mitigation measures will address the probable significant impacts or if an environmental impact statement will be prepared to further analyze the proposal.

***Instructions for applicants*:**

This environmental checklist asks you to describe some basic information about your proposal. Please answer each question accurately and carefully, to the best of your knowledge. You may need to consult with an agency specialist or private consultant for some questions. You may use "not applicable" or "does not apply" only when you can explain why it does not apply and not when the answer is unknown. You may also attach or incorporate by reference additional studies reports. Complete and accurate answers to these questions often avoid delays with the SEPA process as well as later in the decision-making process.

The checklist questions apply to all parts of your proposal, even if you plan to do them over a period of time or on different parcels of land. Attach any additional information that will help describe your proposal or its environmental effects. The agency to which you submit this checklist may ask you to explain your answers or provide additional information reasonably related to determining if there may be significant adverse impact.

Instructions for Lead Agencies:
Please adjust the format of this template as needed. Additional information may be necessary to evaluate the existing environment, all interrelated aspects of the proposal and an analysis of adverse impacts. The checklist is considered the first but not necessarily the only source of information needed to make an adequate threshold determination. Once a threshold determination is made, the lead agency is responsible for the completeness and accuracy of the checklist and other supporting documents.

Use of checklist for nonproject proposals: [help]

For nonproject proposals (such as ordinances, regulations, plans and programs), complete the applicable parts of sections A and B plus the SUPPLEMENTAL SHEET FOR NONPROJECT ACTIONS (part D). Please completely answer all questions that apply and note that the words "project," "applicant," and "property or site" should be read as "proposal," "proponent," and "affected geographic area," respectively. The lead agency may exclude (for non-projects) questions in Part B - Environmental Elements –that do not contribute meaningfully to the analysis of the proposal.

A. Background [help]

1. Name of proposed project, if applicable: [help]

City of Bothell Wastewater Comprehensive Plan Update

2. Name of applicant: [help]

City of Bothell

3. Address and phone number of applicant and contact person: [help]

Don Fiene
18415 101st Ave NE
Bothell, WA

4. Date checklist prepared: [help]

March 9, 2018.

5. Agency requesting checklist: [help]

Washington State Department of Ecology

6. Proposed timing or schedule (including phasing, if applicable): [help]

The Plan provides a schedule of improvements identified for construction for the 6 year and 20 year planning periods.

7. Do you have any plans for future additions, expansion, or further activity related to or connected with this proposal? If yes, explain. [help]

No- This proposal is the result of a Sewer Comprehensive Plan. Recommendations for capital improvements are included in the Plan. Future plan updates or developments unknown to the City at this time may identify wastewater system needs that are not identified in the present plan.

8. List any environmental information you know about that has been prepared, or will be prepared, directly related to this proposal. [help]

Projects scheduled for construction will have a SEPA review by the City of Bothell at the time of construction, unless it is determined that they are exempt.

9. Do you know whether applications are pending for governmental approvals of other proposals directly affecting the property covered by your proposal? If yes, explain. [help]

No.

10. List any government approvals or permits that will be needed for your proposal, if known. [help]

The Plan requires the approval of Ecology. The Plan will also be distributed to the King County Department of Natural Resources, Woodinville Water District, Northshore Utility District and Alderwood Water and Wastewater District.

11. Give brief, complete description of your proposal, including the proposed uses and the size of the project and site. There are several questions later in this checklist that ask you to describe certain aspects of your proposal. You do not need to repeat those answers on this page. (Lead agencies may modify this form to include additional specific information on project description.) [help]

The City of Bothell Wastewater Comprehensive Plan is a planning document describing the location and type of facilities needed to provide wastewater service through 2036. It is used as a resource for public works staff, public officials and state regulatory agencies. The Plan describes management, standard, policies, service area, geography, quality, infrastructure, operations, finance and other aspects of the City of Bothell wastewater management system. The Plan will be used to plan and finance capital improvements needed to provide sewer service into the future.

12. Location of the proposal. Give sufficient information for a person to understand the precise location of your proposed project, including a street address, if any, and section, township, and range, if known. If a proposal would occur over a range of area, provide the range or boundaries of the site(s). Provide a legal description, site plan, vicinity map, and topographic map, if reasonably available. While you should submit any plans required by the agency, you are not required to duplicate maps or detailed plans submitted with any permit applications related to this checklist. [help]

The project area includes the City's sewer service Area.

B. ENVIRONMENTAL ELEMENTS [help]

1. Earth [help]

a. General description of the site: [help]

(circle one): Flat, rolling, **hilly**, steep slopes, mountainous, other _____

b. What is the steepest slope on the site (approximate percent slope)? [help]

Slopes within the Bothell service area as steep as 70 %, however, the areas being served are the developed urban areas.

c. What general types of soils are found on the site (for example, clay, sand, gravel, peat, muck)? If you know the classification of agricultural soils, specify them and note any agricultural land of long-term commercial significance and whether the proposal results in removing any of these soils. [help]

Soils will be considered on a project specific basis.

d. Are there surface indications or history of unstable soils in the immediate vicinity? If so, describe. [help]

The steep slopes in some areas are subject to instability during seismic activity. Slope stability will be determined on a project specific basis.

e. Describe the purpose, type, total area, and approximate quantities and total affected area of any filling, excavation, and grading proposed. Indicate source of fill. [help]

No filling or grading will occur at this time. Grading and fill quantities will be developed along with permits and approvals for specific projects.

f. Could erosion occur as a result of clearing, construction, or use? If so, generally describe. [help]

This will be determined on a project specific basis... The construction specifications will address erosion control measures to minimize potential impact to surface waters and will follow best management practices.

g. About what percent of the site will be covered with impervious surfaces after project construction (for example, asphalt or buildings)? [help]

This will be determined on a project specific basis.

h. Proposed measures to reduce or control erosion, or other impacts to the earth, if any: [help]

Stormwater BMPs will be employed for each project. An erosion control plan will be developed for each project and approved by the City.

2. Air [help]

a. What types of emissions to the air would result from the proposal during construction, operation, and maintenance when the project is completed? If any, generally describe and give approximate quantities if known. [help]

Exhaust from equipment and dust will be the primary sources of emissions during the construction of proposed projects. Construction impacts will be localized and temporary.

b. Are there any off-site sources of emissions or odor that may affect your proposal? If so, generally describe. [help]

Not applicable.

c. Proposed measures to reduce or control emissions or other impacts to air, if any: [help]

Dust suppression measures and minimization of vehicle idling will be implemented during construction projects.

3. **Water** [help]

a. Surface Water:

1) Is there any surface water body on or in the immediate vicinity of the site (including year-round and seasonal streams, saltwater, lakes, ponds, wetlands)? If yes, describe type and provide names. If appropriate, state what stream or river it flows into. [help]

The Sammamish River, North Creek, Little Bear Creek, Swamp Creek and Perry Creek are all within the border of the sewer service area.

2) Will the project require any work over, in, or adjacent to (within 200 feet) the described waters? If yes, please describe and attach available plans. [help]

This will be determined on a project specific basis.

3) Estimate the amount of fill and dredge material that would be placed in or removed from surface water or wetlands and indicate the area of the site that would be affected. Indicate the source of fill material. [help]

Not applicable.

4) Will the proposal require surface water withdrawals or diversions? Give general description, purpose, and approximate quantities if known. [help]

Not applicable.

5) Does the proposal lie within a 100-year floodplain? If so, note location on the site plan. [help]

This will be determined on a project specific basis.

6) Does the proposal involve any discharges of waste materials to surface waters? If so, describe the type of waste and anticipated volume of discharge. [help]

No discharge of waste materials into surface waters will occur as a result of the Plan.

b. Ground Water:

1) Will groundwater be withdrawn from a well for drinking water or other purposes? If so, give a general description of the well, proposed uses and approximate quantities withdrawn from the well. Will water be discharged to groundwater? Give general description, purpose, and approximate quantities if known. [help]

Not applicable.

2) Describe waste material that will be discharged into the ground from septic tanks or other sources, if any (for example: Domestic sewage; industrial, containing the following chemicals. . . ; agricultural; etc.). Describe the general size of the system, the number of such systems, the number of houses to be served (if applicable), or the number of animals or humans the system(s) are expected to serve. [help]
Not applicable.

c. Water runoff (including stormwater):

1) Describe the source of runoff (including storm water) and method of collection and disposal, if any (include quantities, if known). Where will this water flow? Will this water flow into other waters? If so, describe. [help]

This will be determined on a project specific basis.

2) Could waste materials enter ground or surface waters? If so, generally describe. [help]

This will be determined on a project specific basis.

3) Does the proposal alter or otherwise affect drainage patterns in the vicinity of the site? If so, describe. [help]

This will be determined on a project specific basis.

d. Proposed measures to reduce or control surface, ground, and runoff water, and drainage pattern impacts, if any: [help]

Construction specifications for proposed projects will require the implementation of measures to control or eliminate surface, ground, and runoff water impacts, as per regulations.

4. **Plants** [help]

a. Check the types of vegetation found on the site: [help]

_x_deciduous tree: alder, maple, aspen, other
_x_evergreen tree: fir, cedar, pine, other
_x__shrubs
_x__grass
____pasture
_____crop or grain
____ Orchards, vineyards or other permanent crops.
_x__ wet soil plants: cattail, buttercup, bullrush, skunk cabbage, other
__x__water plants: water lily, eelgrass, milfoil, other
__x__other types of vegetation

b. What kind and amount of vegetation will be removed or altered? [help]

This will be determined on a project specific basis.

c. List threatened and endangered species known to be on or near the site. [help]

None known.

d. Proposed landscaping, use of native plants, or other measures to preserve or enhance vegetation on the site, if any: [help]

Revegetation will be required for each project to meet City approval.

e. List all noxious weeds and invasive species known to be on or near the site. [help]

This will be determined on a project specific basis.

5. **Animals** [help]

a. List any birds and other animals which have been observed on or near the site or are known to be on or near the site. [help]

Examples include:

birds: hawk, heron, **eagle, songbirds**, **other:crows**
mammals: **deer**, bear, elk, beaver, other:
fish: bass, **salmon**, **trout**, herring, shellfish, other _____

b. List any threatened and endangered species known to be on or near the site. [help]

Bull Trout and Puget Sound Chinook.

c. Is the site part of a migration route? If so, explain. [help]

The sewer service area is located within the Pacific Flyway; a regional migratory bird route that includes much of Western Washington.

d. Proposed measures to preserve or enhance wildlife, if any: [help]

This will be determined on a project specific basis. Individual SEPA review will be performed on each project, as required.

e. List any invasive animal species known to be on or near the site. [help]

This will be determined on a project specific basis. Individual SEPA review will be performed on each project, as required.

6. **Energy and Natural Resources** [help]

a. What kinds of energy (electric, natural gas, oil, wood stove, solar) will be used to meet the completed project's energy needs? Describe whether it will be used for heating, manufacturing, etc. [help]

Fuel and lubricant will be consumed by machinery during construction. Lift stations run on electric power with diesel and propane standby generators.

b. Would your project affect the potential use of solar energy by adjacent properties? If so, generally describe. [help]

No.

c. What kinds of energy conservation features are included in the plans of this proposal? List other proposed measures to reduce or control energy impacts, if any: [help]

Not applicable.

7. **Environmental Health** [help]

a. Are there any environmental health hazards, including exposure to toxic chemicals, risk of fire and explosion, spill, or hazardous waste, that could occur as a result of this proposal? If so, describe. [help]

None anticipated but will be determined on a project specific basis.

1) Describe any known or possible contamination at the site from present or past uses. [help]

This will be determined on a project specific basis.

2) Describe existing hazardous chemicals/conditions that might affect project development and design. This includes underground hazardous liquid and gas transmission pipelines located within the project area and in the vicinity. [help]

This will be determined on a project specific basis.

3) Describe any toxic or hazardous chemicals that might be stored, used, or produced during the project's development or construction, or at any time during the operating life of the project. [help]

This will be determined on a project specific basis.

4) Describe special emergency services that might be required. [help]

None required.

5) Proposed measures to reduce or control environmental health hazards, if any: [help]

Compliance with industrial safety standards in design, construction on operation of facilities.

b. Noise [help]

1) What types of noise exist in the area which may affect your project (for example: traffic, equipment, operation, other)? [help]

Ambient noise is primarily from traffic and will not affect the projects proposed in the Plan.

2) What types and levels of noise would be created by or associated with the project on a short-term or a long-term basis (for example: traffic, construction, operation, other)? Indicate what hours noise would come from the site. [help]

To be determined on a project specific basis.

3) Proposed measures to reduce or control noise impacts, if any: [help]

Construction equipment will be limited to daylight hours. Mufflers and other sound proofing equipment on construction machinery will be properly operated and maintained.

8. **Land and Shoreline Use** [help]

a. What is the current use of the site and adjacent properties? Will the proposal affect current land uses on nearby or adjacent properties? If so, describe. [help]

Land use in the area is a mixture of residential, commercial, industrial, and public facilities. Pipeline work will be located within public rights-of-way and easements.

b. Has the project site been used as working farmlands or working forest lands? If so, describe. How much agricultural or forest land of long-term commercial significance will be converted to other uses as a result of the proposal, if any? If resource lands have not been designated, how many acres in farmland or forest land tax status will be converted to nonfarm or nonforest use? [help]

No, the project site has not been used as working farmlands or working forest lands.

1) Will the proposal affect or be affected by surrounding working farm or forest land normal business operations, such as oversize equipment access, the application of pesticides, tilling, and harvesting? If so, how: [help]

No.

c. Describe any structures on the site. [help]

This will be determined on a project specific basis.

d. Will any structures be demolished? If so, what? [help]

This will be determined on a project specific basis.

e. What is the current zoning classification of the site? [help]

Zoning classifications are established by the City of Bothell and are a mixture of single family, multi-family, commercial, industrial and public use.

f. What is the current comprehensive plan designation of the site? [help]

The current comprehensive plan designations are consistent with the zoning classifications in the area.

g. If applicable, what is the current shoreline master program designation of the site? [help]

Not applicable.

h. Has any part of the site been classified as a critical area by the city or county? If so, specify. [help]

No.

i. Approximately how many people would reside or work in the completed project? [help]

Not applicable.

j. Approximately how many people would the completed project displace? [help]

Not applicable.

k. Proposed measures to avoid or reduce displacement impacts, if any: [help]

Not applicable.

L. Proposed measures to ensure the proposal is compatible with existing and projected land uses and plans, if any: [help]

All projects must comply with the City of Bothell's land use plans.

m. Proposed measures to reduce or control impacts to agricultural and forest lands of long-term commercial significance, if any: [help]

Not applicable.

9. **Housing** [help]

a. Approximately how many units would be provided, if any? Indicate whether high, middle, or low-income housing. [help]

Not applicable.

b. Approximately how many units, if any, would be eliminated? Indicate whether high, middle, or low-income housing. [help]

Not applicable.

c. Proposed measures to reduce or control housing impacts, if any: [help]

Not applicable.

10. **Aesthetics** [help]

a. What is the tallest height of any proposed structure(s), not including antennas; what is the principal exterior building material(s) proposed? [help]

This will be determined on a project specific basis.

b. What views in the immediate vicinity would be altered or obstructed? [help]

None.

b. Proposed measures to reduce or control aesthetic impacts, if any: [help]

This will be determined on a project specific basis.

11. **Light and Glare** [help]

a. What type of light or glare will the proposal produce? What time of day would it mainly occur? [help]

Not applicable.

b. Could light or glare from the finished project be a safety hazard or interfere with views? [help]

Not applicable.

c. What existing off-site sources of light or glare may affect your proposal? [help]

Not applicable.

d. Proposed measures to reduce or control light and glare impacts, if any: [help]

Not applicable.

12. **Recreation** [help]

a. What designated and informal recreational opportunities are in the immediate vicinity? [help]

This will be determined on a project specific basis.

b. Would the proposed project displace any existing recreational uses? If so, describe. [help]

This will be determined on a project specific basis.

c. Proposed measures to reduce or control impacts on recreation, including recreation opportunities to be provided by the project or applicant, if any: [help]

This will be determined on a project specific basis.

13. **Historic and cultural preservation** [help]

a. Are there any buildings, structures, or sites, located on or near the site that are over 45 years old listed in or eligible for listing in national, state, or local preservation registers ? If so, specifically describe. [help]

This will be determined on a project specific basis.

b. Are there any landmarks, features, or other evidence of Indian or historic use or occupation? This may include human burials or old cemeteries. Are there any material evidence, artifacts, or areas of cultural importance on or near the site? Please list any professional studies conducted at the site to identify such resources. [help]

This will be determined on a project specific basis.

c. Describe the methods used to assess the potential impacts to cultural and historic resources on or near the project site. Examples include consultation with tribes and the department of archeology and historic preservation, archaeological surveys, historic maps, GIS data, etc. [help]

Not applicable.

d. Proposed measures to avoid, minimize, or compensate for loss, changes to, and disturbance to resources. Please include plans for the above and any permits that may be required. [help]

This will be determined on a project specific basis.

14. **Transportation** [help]

a. Identify public streets and highways serving the site or affected geographic area and describe proposed access to the existing street system. Show on site plans, if any. [help]

This will be determined on a project specific basis.

b. Is the site or affected geographic area currently served by public transit? If so, generally describe. If not, what is the approximate distance to the nearest transit stop? [help]

This will be determined on a project specific basis.

c. How many additional parking spaces would the completed project or non-project proposal have? How many would the project or proposal eliminate? [help]

Not applicable.

d. Will the proposal require any new or improvements to existing roads, streets, pedestrian, bicycle or state transportation facilities, not including driveways? If so, generally describe (indicate whether public or private). [help]

This will be determined on a project specific basis.

e. Will the project or proposal use (or occur in the immediate vicinity of) water, rail, or air transportation? If so, generally describe. [help]

This will be determined on a project specific basis.

f. How many vehicular trips per day would be generated by the completed project or proposal? If known, indicate when peak volumes would occur and what percentage of the volume would be trucks (such as commercial and nonpassenger vehicles). What data or transportation models were used to make these estimates? [help]

This will be determined on a project specific basis.

g. Will the proposal interfere with, affect or be affected by the movement of agricultural and forest products on roads or streets in the area? If so, generally describe. [help]

Not applicable.

h. Proposed measures to reduce or control transportation impacts, if any: [help]

This will be determined on a project specific basis.

15. **Public Services** [help]

a. Would the project result in an increased need for public services (for example: fire protection, police protection, public transit, health care, schools, other)? If so, generally describe. [help]

No.

b. Proposed measures to reduce or control direct impacts on public services, if any. [help]

This will be determined on a project specific basis.

16. **Utilities** [help]

a. Circle utilities currently available at the site: [help]
electricity, natural gas, water, refuse service, telephone, sanitary sewer, septic system, **other _phone, cable television**

b. Describe the utilities that are proposed for the project, the utility providing the service, and the general construction activities on the site or in the immediate vicinity which might be needed. [help]

This will be determined on a project specific basis.

C. Signature [help]

The above answers are true and complete to the best of my knowledge. I understand that the lead agency is relying on them to make its decision.

Signature: _____
Name of signee _____
Position and Agency/Organization _____
Date Submitted: _____

D. supplemental sheet for nonproject actions [help]

(**IT IS NOT NECESSARY** to use this sheet for project actions)

Because these questions are very general, it may be helpful to read them in conjunction with the list of the elements of the environment.

When answering these questions, be aware of the extent the proposal, or the types of activities likely to result from the proposal, would affect the item at a greater intensity or at a faster rate than if the proposal were not implemented. Respond briefly and in general terms.

1. How would the proposal be likely to increase discharge to water; emissions to air; production, storage, or release of toxic or hazardous substances; or production of noise?

Plan sewer projects and sewer system maintenance is intended to prevent environmental and property damage resulting from sanitary sewer overflows.

Proposed measures to avoid or reduce such increases are:

Maintenance of existing sewer facilities and capacity improvements for lift stations and sewer mains should reduce the possibility of this occurrence.

2. How would the proposal be likely to affect plants, animals, fish, or marine life?

Proposed projects should prevent environmental impacts of sewer spills, which could harm plants and animals.

Proposed measures to protect or conserve plants, animals, fish, or marine life are:

Planning the sewer system is intended to protect the environment and public health.

3. How would the proposal be likely to deplete energy or natural resources?

Not applicable.

Proposed measures to protect or conserve energy and natural resources are:

The City plans to construct a gravity main to abandon Lift Station No. 4, which will reduce pumping requirements and conserve energy.

4. How would the proposal be likely to use or affect environmentally sensitive areas or areas designated (or eligible or under study) for governmental protection; such as parks, wilderness, wild and scenic rivers, threatened or endangered species habitat, historic or cultural sites, wetlands, floodplains, or prime farmlands?

Not applicable.

Proposed measures to protect such resources or to avoid or reduce impacts are:

Not applicable.

5. How would the proposal be likely to affect land and shoreline use, including whether it would allow or encourage land or shoreline uses incompatible with existing plans?

Not applicable.

Proposed measures to avoid or reduce shoreline and land use impacts are:

Not applicable.

6. How would the proposal be likely to increase demands on transportation or public services and utilities?

Not applicable.

Proposed measures to reduce or respond to such demand(s) are:

Not applicable.

7. Identify, if possible, whether the proposal may conflict with local, state, or federal laws or requirements for the protection of the environment.

Not applicable.

APPENDIX C

DESIGN STANDARDS

Chapter 6

SANITARY SEWERS

City of Bothell™

DESIGN AND CONSTRUCTION

STANDARDS AND SPECIFICATIONS 2018

Sections

6-1 General
- 6-1.1 Performance Bonds
- 6-1.2 Maintenance Bonds

6-2 Permits

6-3 Easements

6-4 Alignment Tolerance

6-5 Construction Plans
- 6-5.1 Required Notes On Plans
- 6-5.2 As-Builts

6-6 Manholes
- 6-6.1 Section Description
- 6-6.2 Materials
- 6-6.3 Construction Requirements

6-7 Sewer Main
- 6-7.1 Materials
- 6-7.2 General Requirements
- 6-7.3 Underground Utilities
- 6-7.4 Pipe Bedding
- 6-7.5 Laying Sewer Pipe
- 6-7.6 Plugs And Connections
- 6-7.7 Jointing
- 6-7.8 Jacking, Auguring or Tunneling
- 6-7.9 Size
- 6-7.10 Slope
- 6-7.11 Pavement Patching
- 6-7.12 Cleaning And Testing Of Sanitary Sewers
- 6-7.13 Exfiltration Test
- 6-7.14 Television Inspection

6-8 Acceptance Of Sanitary Sewer Systems

6-9 Sanitary Side Sewers
- 6-9.1 Description
- 6-9.2 Materials
- 6-9.3 General
- 6-9.4 Side Sewer Construction
- 6-9.5 Sizing Side Sewers
- 6-9.6 Slope Of Side Sewers
- 6-9.7 Fittings and Cleanouts For Side Sewer

6-9.8 Tracer Tape
6-9.9 Testing Of Side Sewers
6-9.10 Side Sewer As-Builts

6-10 Septic Tanks

6-11 Lift (Pump) Stations

6-12 Grease Traps and Interceptors

6-1 GENERAL

The City of Bothell provides sewer service to approximately 50 percent of the city. This section of the Bothell Standards pertains to the City's sewer service area only. For information on sewer requirements outside the City's sewer service area, please contact the appropriate sewer utility district.

All sanitary sewer mains, side sewers, sanitary sewer manholes, and sanitary sewer facilities shall be designed and constructed in accordance with the latest issue or revision of the Criteria for Sewage Works Design (Orange Book) published by the Washington State Department of Ecology, the WSDOT/APWA Standard Specifications and WSDOT Standard Plans, and the Bothell Standards and Details for sanitary sewers. All connections to King County Wastewater Treatment Division facilities shall conform to King County Wastewater Treatment Division standards.

A sanitary sewer main extension shall be constructed when the property does not front on a sewer main. The extension shall be to a point at least 5 feet beyond the farthest edge of the property, or as directed by the Public Works Director. Sewer main improvements shall be constructed when the existing sewer main is not adequate for the proposed increased use (criteria used to determine adequacy include, but are not limited to, age, pipe diameter, type, and conditions of existing sewer mains). The City's sewer system comprehensive plan, found in the Capital Facilities Element of the Imagine Bothell…Comprehensive Plan, and TV inspection results shall be the primary resources utilized to determine adequacy. The improvements shall extend from the project to a point where the system is deemed reliable. The improvements shall be consistent with the Bothell Standards for new construction and must be approved by the Public Works Director.

All sanitary sewer pipe to be installed shall be structurally sound for the design depth.

All requests for inspections and for witnessing tests shall be scheduled with the City construction inspector by calling the inspection request line at least 24 hours in advance, and no more than 7 days in advance. Failure to give adequate notice may result in delays to the work for required inspections.

All oils, grease, and contaminants from underground parking facilities shall drain into the sanitary sewer systems, through a grease interceptor.

6-1.1 PERFORMANCE BONDS

Before any permit is issued, the developer shall comply with all provisions of Section 1-5 GUARANTEES, BONDS, AND INSURANCE.

6-1.2 MAINTENANCE BONDS

Before any permit is issued, the developer shall comply with all provisions of Section 1-5 GUARANTEES, BONDS, AND INSURANCE.

6-2 PERMITS

In addition to the appropriate permits listed in Section 1-6, additional permits may be required by the City, Washington Department of Fish & Wildlife, Department of Ecology, King County Wastewater Treatment Division, Snohomish County, etc. The developer shall submit copies of these approved permits to the City of Bothell before the City will issue a right-of-way invasion permit.

Before any permit is issued to allow working the public right-of-way, the developer shall provide proof of insurance to the City as described in Section 1-5.3.

6-3 EASEMENTS

All sewer mains not located in the public right-of-way, that are to be maintained by the City, shall be located within a tract. When creation of a tract is not possible, the sewer main shall be centered within easements granted to the City. All easements shall meet the requirements of Section 1-9.3. If the sewer is placed deeper than 7.5 feet, the easement width shall be at least 2 times the burial depth of the sanitary sewer.

Carsonite markers shall be installed every 50 feet and at all structures when the sewer main is not installed in the roadway.

Easements shall be fenced, with paved access to manholes.

6-4 ALIGNMENT TOLERANCE

1. Maximum deviation from established line and grade shall be 1/32 inch per inch of pipe diameter, and ½ inch per pipe length.
2. No adverse grade in any pipe length will be permitted.
3. The maximum deviation from established line and grade between two successive joints shall be 1/3 of the amounts specified above.

6-5 CONSTRUCTION PLANS

See Section 1-9 for construction plans requirements.

6-5.1 REQUIRED NOTES ON PLANS

The following standard notes are required on all sanitary sewer plans:

1. All sewer lines, side sewers, sanitary sewer manholes, and sanitary sewer facilities shall be designed and constructed in accordance with the latest issue or revision of the Criteria for Sewage Work Design (Orange Book) published by the Washington State Department of Ecology, the WSDOT/APWA Standards Specifications and WSDOT Standard Plans and the Bothell Standards for sanitary sewers. All connections to King County Wastewater Treatement facilities shall conform to the standards established by King County Wastewater Treatment Division.
2. A preconstruction meeting shall have been conducted and a 24-hour notice provided to the City prior to starting new construction. The developer shall arrange the preconstruction meeting with all concerned parties and obtain any and all required permits from the City and other agencies, prior to starting construction. The developer shall also notify the City construction inspector at least 24 hours in advance of backfilling all construction.
3. The developer must have a set of City-approved plans on site at all times during the course of construction.
4. Before any construction may occur, the developer shall have City-approved signed plans, all City, county, state, federal, and other required permits, and shall have posted all required bonds.
5. All existing structures shall remain accessible at all times.
6. Sanitary sewers are to be centered in easements with a minimum width of 15 feet.
7. Minimum cover over sanitary sewer pipe is to be 5 feet, unless otherwise shown and approved by the Public Works Director.
8. Tests shall be observed and inspected by the City construction inspector.
9. All damages to public or private property, incurred by the developer during the course of construction shall be promptly repaired to the satisfaction of the City construction inspector before project approval or release of the performance bond.
10. No part of the sanitary sewer system shall be put into use until it has been tested, inspected, videoed, and approved by the City construction inspector. A copy of pipe inspection video shall submitted to the City.
11. The developer shall call the Utility Notification Center at 1-800-424-5555 at least 48 hours before digging or grading operations occur.
12. The developer shall verify existing utility locations, whether or not these utilities are shown on the plans. The developer shall exercise all care to avoid damage to any utilities. If conflicts with existing utilities arise during construction, the developer shall notify the City construction inspector and any changes required shall be approved by the Public Works Director prior to commencement of related construction on the project.
13. All requests for inspections and for witnessing tests shall be scheduled with the City construction inspector at least 24 hours in advance, and no more than 7 days in

advance. Failure to give adequate notice may result in delays to the work for required inspections.

14. All sewer main extensions within the public right-of-way or in easements must be staked for line and grade prior to starting construction.
15. As part of a sewer main extension, the ladder and cone shall be rotated, if the ladder is over the channel of manhole.
16. Whenever a new sewer main/side sewer replaces an existing sewer main/side sewer, the developer shall abandon the existing at the sewer main, and shall cap or plug the abandoned sewer main. The plans shall show the size and location of all existing sewer facilities with respect to the new connection and abatement points. Whenever a replacement side sewer is constructed and connected to an existing sewermain, the side sewer shall be constructed as new, according to Bothell Standards.
17. Before the City accepts sanitary sewer improvements, the developer shall supply the City construction inspector with mylar as-builts of the sanitary sewer system bearing the stamp and signature of a registered professional engineer, or a registered land surveyor in a format approved by the City. The developer shall supply digital file of the construction plans in addition to mylar as-builts. The City construction inspector must review and approve all as-builts. The developer shall make all changes to the as-builts as directed by the City construction inspector before the City will approve and accept the as-builts.

6-5.2 AS-BUILTS

See Section 1-14 for as-built requirements.

6-6 MANHOLES

6-6.1 SECTION DESCRIPTION

This work shall consist of constructing manholes in accordance with the Bothell Standards and with Section 7-05 of the WSDOT/APWA Standard Specifications. Where conflicts occur, the Bothell Standards shall have precedence over Section 7-05 of the WSDOT/APWA Standard Specifications.

6-6.2 MATERIALS

Manholes shall be constructed of precast units in accordance with Standard Detail 621. Any request to deviate from this detail must be reviewed by the Public Works Director.

Manholes shall be constructed in accordance with AASHTO M-199 (ASTM C 478), unless otherwise shown on plans or noted in WSDOT/APWA Standard Specifications.

All reinforced cast-in-place concrete shall be Class 4000. Non-reinforced concrete in the channel and shelf shall be Class 3000. All precast concrete shall be Class 4000. Manhole channels shall be Class 3000 concrete. When using adjustment rings on top of the cone or flat top, one single 12 inch precast concrete (masonry) ring or a maximum of three 4 inch precast concrete rings may be used for adjustment of the casting to final street grade. Refer to Detail 621. Use no bricks or wood to raise iron.

Precast bases shall be furnished with cutouts, or may be core drilled in the field.

All base reinforcing steel shall have a minimum yield strength of 60,000 psi and be placed in the upper half of the base with 1 inch minimum clearance.

Cutout hole size is equal to pipe outer diameter plus manhole wall thickness. Maximum hole size is 36 inches for a 48-inch manhole and 42 inches for a 54-inch manhole. Minimum distance between holes is 8 inches (measured on the inside of the manhole).

A 1 foot precast section is required below the cone or flat top.

Manhole size depends on sizes, location, and numbers of holes for pipes. Manhole design and size shall be approved and warranted by the manhole supplier.

Joints between manhole sections shall be rubber gasket and mortared inside and out.

Standard precast cones shall provide reduction from 48 inches to 24 inches with a height not less than 18 inches and from 54 to 24 inches with a height not less than 24 inches.

Standard flat slab covers shall be at least 8 inches thick and shall conform to the outer dimension of the standard sections upon which they are to be placed.

For heights over 25 feet, the manhole base slab design shall be designed by a structural engineer.

6-6.3 CONSTRUCTION REQUIREMENTS

6-6.3.1 Bedding

Unless otherwise directed by the Public Works Director, manholes constructed with precast base sections or cast-in-place sections shall be placed to grade upon 6 inches minimum depth of crushed surfacing base course meeting the requirements of Section 9-03.9(3) of the WSDOT/APWA Standard Specifications. The crushed surfacing base course must be compacted to 95 percent maximum density.

6-6.3.2 Joints

Joints between precast manhole elements shall be rubber gasketed in a manner similar to pipe joints conforming to ASTM C-443 and they shall be grouted inside and out. Shop drawings of the joint design shall be submitted to the Public Works Director for approval prior to manufacture. Completed joints shall show no visible leakage and shall conform to the dimensional requirements of ASTM 478.

6-6.3.3 Manhole Channels

All manholes shall be channeled, unless otherwise approved by the Public Works Director. Channels shall match existing sewer grades. Channels shall converge with smooth transitions rounded into well-finished junctions. Channel sides shall be carried up vertically to the crown elevation of the various pipes. Channel width shall be wide enough to accept a vactor tube for maintenance. Concrete shelves between channels shall be smoothly finished, warped evenly, and sloped to drain.

All manholes shall have a minimum drop of 0.10 feet to a maximum drop of 1.0 foot between the invert in and the invert out.

6-6.3.4 Manhole Pipe Connections

All pipes entering or leaving the manhole shall be core drilled to the size of the Kor-N-Seal boot (or approved equal) manufacturer's specifications for the pipe size being used. Flexible pipe joint shall be placed within 2 feet of the outside face of the manhole. The flexible joint shall be placed on firmly compacted bedding, particularly within the area of the manhole excavation, which normally is deeper than that of the sewer trench.

Pipe connected to manholes shall be provided with a Kor-N-Seal boot (or approved equal) manhole adapter, complete with gasket, and shall be approved by the Public Works Director.

6-6.3.5 Steps

Manholes 3 feet and deeper shall have steps as per Standard Detail 643, and shall be installed on sides of manholes, opposite of pipe and channels where possible. First step shall be 18 to 24 inches from top of casting.

6-6.3.6 Connections to Existing Manholes

The developer shall verify invert elevations prior to construction. The crown elevation of laterals shall be the same as the crown elevation of the incoming pipe, unless specified. The existing base shall be reshaped to provide a channel equivalent to that specified for a new manhole.

The developer shall excavate completely around the manhole to prevent unbalanced loading. The manhole shall be kept in operation at all times and the necessary precautions shall be taken to prevent debris or other material from entering the sewer, including a tight pipeline bypass through the existing channel, if required.

The developer shall core drill to the size of the Kor-N-Seal boot (or approved equal), according to the manufacturer's specifications for the size of pipe used. Jackhammers shall not be used.

The developer shall provide protective clothing and equipment (coveralls, gloves, boots, head covering, goggles, respirators) to crews working with asbestos cement pipe in order to ensure the workers' exposure to asbestos material is at or below the limit prescribed in WAC 296-62-07705.

Asbestos cement pipe shall be cut with a reed wheel cutter with controlled, flowing water.

Contaminated clothing shall be transported in sealed, impermeable bags and labeled. Asbestos cement pipe shall be left and buried in the trench.

6-6.3.7 Spacing

Maximum spacing of manholes shall be 300 feet, unless approved by the Public Works Director. All manholes are to be accessible to maintenance vehicles.

A manhole is required at any change in pipe slope, alignment, or size. Manholes are not allowed in a fill section, unless base is on a cut section. A manhole is required at the ends of all sewer mains, unless a cleanout is specifically approved by the Public Works Director. Prefer manhole for camera access.

Manholes not set in the roadway must have paved asphalt access, at least 12 feet wide, to and including the manhole pad.

6-7 SEWER MAIN

6-7.1 MATERIALS

Sanitary sewer pipe shall meet the following requirements:

1. PVC Sewer Pipe: Polyvinyl Chloride (PVC) sanitary sewer pipe shall conform to the requirements of ASTM D-3034 SDR-35.
2. Ductile Iron Sewer Pipe: Ductile iron sanitary sewer pipe shall conform to ANSI A-21.51 or AWWA C-151 and shall be cement mortar lined, push-on joint or mechanical joint. The ductile iron pipe shall be Class 50, unless otherwise approved.

6-7.2 GENERAL REQUIREMENTS

No broken or defective sewer pipe or related materials shall be used.

The maximum trench width (from the foundation to 12 inches above the pipe) shall be 40 inches for pipe with an inside diameter of 15 inches or less. For pipe with an inside diameter of 18 inches or more, the maximum trench width shall be 1.5 times the inside diameter plus 18 inches. (see Standard Details 470 and 471). If the maximum trench width is exceeded without authorization from the City construction inspector, the developer shall provide, at the discretion of the construction inspector, pipe with a higher strength classification, or a higher class of bedding.

During excavation, installation of sewer lines, and placement of trench backfill, excavations shall be kept free of water. The developer shall control surface runoff to prevent entry or collection of water in excavations. The static water level shall be drawn down at least 1 foot below the bottom of the excavation to maintain the undisturbed state of the foundation soils and to maintain the required density of any fill or backfill. The dewatering system shall be installed and operated so that the groundwater level outside the excavation area is not reduced to an extent that would damage or endanger adjacent structures or property.

6-7.3 UNDERGROUND UTILITIES

Activities such as trench excavation, tunneling or boring, pipe embankment, backfilling, compaction, safety and pavement patching, whether for public or private utilities, shall conform to the requirements set forth in other sections of the Bothell Standards.

6-7.4 PIPE BEDDING

See Standard Details 470 and 471. Pipe bedding shall be at least 6 inches deep beneath the pipe. Bedding shall be installed and spread smoothly so that the pipe is uniformly supported. Subsequent lifts are not to exceed 6 inches in thickness and shall be installed to the crown of the pipe. All lifts shall be individually compacted to 90 percent density as determined by ASTM D-698. An 18-inch lift shall be placed and compacted over the crown of the pipe, prior to backfilling the trench. The developer may use controlled density fill (CDF) for pipe backfill above the pipe's invert level, with approval of Public Works Director.

6-7.5 LAYING SEWER PIPE

All sewer main installations shall have the line and grade set by survey, prior to construction. Staking shall show each manhole and cuts to all inverts. All mains are to be laid straight between manholes at a minimum depth of 8 feet, measured at the invert, unless the approved plans show otherwise or unless specifically approved otherwise in writing by the Public Works Director.

The developer may use any method, such as swede line and batter board or laser beam etc., to accurately transfer the surveyor-provided control points to the designated alignment and grade.

When using the swede line and batter board method, the developer shall transfer line and grade into the trench where they shall be carried by means of a taut grade line supported on firmly set batter boards at intervals of not more than 30 feet. Not less than three batter boards shall be in use at one time. Grades shall be constantly checked and in event the batter boards do not line up, the work shall be immediately stopped and the cause remedied before proceeding with the work.

When using a laser beam to set pipe alignment and grade, the developer shall constantly check the position of laser beam from surface hubs provided by the surveyor to ensure the laser beam is still on alignment and grade. In the event the laser beam is found out of position, the developer shall stop work and make the necessary corrections to the laser beam equipment and pipe installed.

There shall be a minimum horizontal clearance between sewer and water main pipe of 10 feet, unless another design alternative has been specifically approved by the Public Works Director. Sanitary sewers shall always be installed lower than water mains. Where sanitary sewers and water mains cross, there shall be a minimum vertical separation of 18 inches from the crown of the sanitary line to the invert of the water main, unless an alternative design has been specifically approved by the Public Works Director.

Sanitary sewers laid 18 feet and deeper must be cement lined, ductile iron pipe, Class 50.

Trenches shall be excavated to the depth and grade required. Pipe bedding shall be placed to provide a uniform and continuous bearing and support for the pipe on solid, undisturbed or compacted ground.

Sewer lines shall be laid upgrade from the starting point of connection on the existing sewer, or from a designated starting point, as approved by the City construction inspector. Sewer pipe shall be installed with the bell end forward or upgrade. After placing a length of pipe in the trench, the spigot shall be centered in the bell and the pipe forced home and brought to correct line and grade. During joining, the pipe shall be partially supported to minimize unequal lateral pressure and to maintain concentricity. Pipe handling after the gasket has been affixed shall be carefully controlled to avoid disturbing and dislocating the gasket. Any disturbed or dislocated gaskets shall be removed, cleaned, replaced, and lubricated before joining the sections.

The maximum length of open trench on streets and roadway shoulders shall not exceed 300 feet at any time, unless specifically approved by the City construction inspector. The developer shall ensure that the project site is a safe environment at all times. At the end of each day, all open trenches must either be backfilled or covered with steel plates and barricaded with attached flashing yellow lights to prevent vehicles, people, and animals from falling into the trench.

The developer shall provide a competent person on-site to oversee the construction process during all shoring operations. Where conditions exist which require shoring, the developer shall adequately shore trenches to protect existing property, utilities, pavement, etc. and to provide safe working conditions inside and above the trench. The method of shoring shall be according to the developer's design. The developer may elect to use a combination of shoring and overbreak, tunneling, boring, sliding trench shields, or other methods to accomplish the work, provided the methods meet all applicable local, state, and federal safety codes. Damages resulting from improper cribbing or from failure to crib shall be the sole responsibility of the developer.

Compaction tests shall be required for all backfilled trenches in paved public roadways and in roadway shoulders. A minimum of one test location shall be chosen by the City construction inspector for every 200 linear feet of sewer main installed. The City construction inspector has the discretion to require additional tests, and to specify test locations. All testing shall be at the developer's expense.

The developer shall remove from the project site, at his/her expense, all excavated trench material deemed by the City construction inspector to be unsuitable for trench backfill.

No construction materials, soil, debris, etc. shall be stockpiled in the public right-of-way unless specific permission is granted in writing by the City construction inspector.

Under no circumstances shall pipe materials be dropped or dumped into the trench. Broken or otherwise defective pipe shall be removed from the job site and replaced.

Every precaution shall be taken to ensure foreign material does not enter the pipe. When pipe laying is not in progress, the open ends of the pipe shall be closed by a watertight plug or other means approved by the City construction inspector. If water is in the trench when work resumes, the seal on the pipe shall remain in place until the trench is completely pumped dry. No pipe shall be laid in water, or when, in the opinion of the City construction inspector, trench conditions are unsuitable.

No willows, poplars, cottonwoods, birches, soft maple, gum, or any other tree or shrub whose roots are likely to obstruct public sewers are allowed within 30 feet of any public sewer. Any of these trees found to be located within 30 feet of a proposed sewer main shall be removed at the developer's expense.

6-7.6 PLUGS AND CONNECTIONS

All fittings shall be capped or plugged with a plug of an approved material and gasketed with the same gasket material as the pipe unit, or the pipe shall be fitted with an approved

mechanical stopper, or the pipe shall have an integrally cast knock-out plug. The plug shall be able to withstand all test pressures without leaking.

6-7.7 JOINTING

Where it is necessary to break out or connect to an existing sewer during construction, only new pipe having the same inside diameter shall be used in reconnecting the sewer. Where joints must be made between pipes with a mismatched wall thickness, the developer shall use flexible gasketed coupling, adapter, or coupling-adapter to make a watertight joint. Couplings shall be those manufactured by Romac, Smith Blair, or approved equal, for reinforced pipes and Fernco, or approved equal, as approved by the City construction inspector for non-reinforced pipes.

6-7.8 JACKING, AUGURING, OR TUNNELING

RESERVED

6-7.9 SIZE

The minimum pipe size for sanitary sewer mains shall be 8 inches in diameter. The Public Works Director shall determine the pipe size required to serve the surrounding area.

6-7.10 SLOPE

All sewers shall be designed and constructed to give mean velocities of not less than 2.0 feet per second when flowing full. The following minimum slopes shall be provided, however greater slopes are desired.

Sewer Size (inches)	**Minimum Slope (feet per 100 feet)**
6”	**1.0%**
8	0.40
10	0.28
12	0.22
15	0.15
18	0.12
21	0.10
24	0.08

If the current Criteria for Sewage Work Design manual requires different slopes, those slopes in Criteria for Sewage Work Design shall apply.

6-7.11 PAVEMENT PATCHING

For pavement patching see Section 3-10.

6-7.12 CLEANING AND TESTING OF SANITARY SEWERS

All sanitary sewer pipe shall be cleaned and tested after backfilling. Testing shall be by either exfiltration or low pressure air method. The developer has the option to select the method of testing, unless the groundwater table is such that the City construction inspector may require the infiltration test.

The developer shall clean and flush all sewer lines with clean water and use an approved cleaning ball prior to testing. The cleaning ball shall be an inflatable, diagonally ribbed rubber ball of a size that will inflate to fit snugly into the pipe to be tested. A rope or chord shall be fastened to the ball to enable total control of the ball at all times.

All testing shall be under the direction and in the presence of the City construction inspector. The developer shall contact the City construction inspector at least three working days before testing is to occur. Cleaning and testing of sewer lines shall be completed within 15 working days of backfilling, unless otherwise approved in writing by the City construction inspector. The developer shall furnish all labor, materials, tools, and equipment necessary to make clean and test the sewer lines. Any damage resulting from testing shall be repaired by the developer to the satisfaction of the City construction inspector.

All wyes, tees, and stubs shall be plugged with flexible jointed caps, or acceptable alternate, securely fastened to withstand the internal test pressure. These plugs or caps shall be readily removable and their removal shall provide a socket suitable for making a flexible, jointed, lateral connection or extension.

If the developer elects to test large diameter pipe one joint at a time, leakage allowances shall be converted from GPH per 100 feet to GPH per joint by dividing by the number of joints occurring in 100 feet. If leakage exceeds the allowable amount, corrective measures shall be taken and the line shall be re-tested to the satisfaction of the City construction inspector.

If any sewer installation fails to meet the requirements of the test method used, the developer shall determine the source or sources of leakage and shall replace all defective pipe. The complete pipe installation shall meet the requirements of the test method used before being considered acceptable. Replacement of defective pipe shall not commence until the developer has received approval of his/her plan from the City construction inspector.

6-7.13 EXFILTRATION TEST

Prior to exfiltration leakage testing, the developer may fill the pipe with clear water to permit normal absorption into the pipe walls. The developer shall complete the leakage test within 24 hours after filling the pipe. When under test, the allowable leakage shall be limited according to the following provisions. Specified allowances assume pre-wetted pipe.

Leakage shall be no more than 0.28 GPH per inch diameter per 100 feet of sewer, with a hydrostatic head of 6 feet above the crown at the upper end of the test section, or above the natural groundwater table at the time of test, whichever is higher. The length of pipe

tested shall be limited so that the pressure at the lower end of the section tested does not exceed 16 feet of head above the invert; and in no case shall the length of pipe being tested be greater than 700 feet or the distance between manholes, whichever is shorter.

Where the test head is other than 6 feet, the maximum leakage shall be 0.28 GPH per inch of diameter per 100 feet of pipe length times the square root of the test head. The leakage can be determined from the equation:

Maximum leakage (in gallons per hour) = $0.28x\frac{\sqrt{H}}{\sqrt{6}}xDx\frac{L}{100}$

Where: D = diameter (inches)
L = length of pipe (feet)
H = test head (feet)

When the test is to be made one joint at a time, the leakage per joint shall not exceed the computed allowable leakage per length of pipe.

6-7.14 SANITARY SEWER CLOSED CIRCUIT TELEVISION INSPECTION WITH AUDIO ASSESSMENT

Before the City will issue final acceptance of the project, the interior of all mainline Sanitary Sewer pipes, and all manhole connection pipes larger than 6 inches in diameter must be inspected by Closed Circuit Television (CCTV) camera and footage provided to the City in DVD format. Personnel performing television inspection must have completed the Pipeline Assessment and Certification Program (PACP) and submit to the Engineer at least 3 working days in advance of the first television inspection. The City does not accept VHS tapes.

The CCTV camera must have zoom capability as well as a 360 degree radial view color television camera (also known as a pan and tilt) with a mechanical footage counter calibrated to indicate video footage consistent with distance traveled in the pipe. Footage must be zeroed at the centerline of the manhole where the video starts and footage increases as it travels forward, and decreases when backward camera movement is required. Display footage must be shown on the video.

The camera must have a light source providing adequate illumination to clearly identify pipe invert, crown, joints, sides, connections, and infiltration/exfiltration. Provide adequate illumination to record images at least 15 feet in front of the camera.

Audio commentary must be objective and based on PACP defined assessment conditions. Audio must be intelligible and as free from interference and background noise as can reasonably be done. Do not use subjective comments such as: the fault of, caused by, and opinion. Comments must include the footage counter reading, each connection, the starting and ending structure, indicated flaws, areas of infiltration/exfiltration, open joints, outfall, and other features as may be necessary.

Submit television inspections on DVD-R discs. All inspections must be in a PACP format, with uploadable capability to the City Of Bothell GraniteNet database. Contact City Of Bothell for specific database requirements.

Each individual sanitary sewer main inspection, from manhole to manhole, must be recorded on one digital file. The City will accept multiple digital files for a single pipe only when the pipe reach cannot be recorded to one digital file due to extreme pipe length or obstructions in the pipe. The City will not accept multiple sewer main inspections recorded on a single digital file.

The City will not accept dirty, blurry, foggy, submerged, or otherwise non-viewable inspections.

Prior to inspection, the Contractor must have completed the manhole channeling, grouting, trench backfill, compaction, and final restoration of the street or easement. The City must have accepted the invert elevations and record drawings. All sewer mains and laterals must be cleaned. All lines not clean must be re-flushed, cleaned, and re-inspected.

At least two days prior to the inspection, the Contractor must contact the City to inform the Inspector when and which lines will be inspected.

Immediately preceding the CCTV inspection, water with dye must be poured into the system and must be visible on the DVD recording.

At the beginning of each sewer main inspection, the information listed below must be electronically generated and displayed on the CCTV footage. This data must be continuously updated, and displayed on the CCTV footage, during the inspection.

1. Date of inspection
2. Contractor Company Name
3. Operator Name
4. Upstream Manhole number to downstream manhole number
5. Direction of inspection (upstream or downstream)
6. Pipe material and size

A 1-inch ball must be placed immediately in front of the camera, mounted such that the ball contacts the pipe bottom at all times. CCTV inspection cannot be paused once it begins. Only continuous inspections are acceptable. Pipe joints, manholes, and connections into manholes must be thoroughly inspected by panning the entire connection, including manhole risers. Zooming inspection of all lateral connections is required. The Contractor must bear all costs incurred in correcting any deficiencies found during the CCTV inspection, including the cost of any additional CCTV inspections that may be required by the City to verify that deficiencies have been corrected.

6-8 ACCEPTANCE OF SANITARY SEWER SYSTEMS

The following steps shall be completed before the City will accept the improvements and release the performance bond.

1. All easements must be reviewed, approved, and recorded, as per Section 1-9.3.
2. The sewer system shall have been tested, inspected, approved, and accepted by the City construction inspector.
3. The City construction inspector shall have received, reviewed, and approved the as-builts as per Section 1-14.
4. The City must receive a satisfactory maintenance bond per Section 1-5.2.

6-9 SANITARY SIDE SEWERS

Side sewers shall be connected to the sewer main only, not into the manholes, unless otherwise approved by the Public Works Director.

6-9.1 DESCRIPTION

The sanitary side sewer is that portion of a sewer line constructed between a public sewer line and the building from which the waste originates.

6-9.2 MATERIALS

Materials shall meet the requirements of Section 6-7.1.

All pipe shall be clearly marked with type, class, and thickness, as applicable. Lettering shall be legible and permanent under normal conditions of handling and storage.

Jointing shall be with approved, flexible gasketing.

Flexible gasketing shall include rubber, synthetic rubber-like, and plastic materials specially manufactured for the joint, pipe size, and use intended, and shall be furnished by the manufacturer of the pipe to be used.

6-9.3 GENERAL

Side sewer construction shall conform to Standard Details 601, 602 and 607.

The applicant shall obtain a side sewer permit and all other required permits before connection to the sanitary sewer main shall be allowed.

Side sewer locations shown on the drawings shall be subject to relocation in the field. Regardless of the location shown on the drawing, the developer shall place the tee branch in the sewer main at the location designated by the City construction inspector.

Four or more buildings shall not be connected to a side sewer unless approved by the Public Works Director.

Side sewers shall not cross a public right-of-way or run parallel to the right-of-way centerline.

6-9.4 SIDE SEWER CONSTRUCTION

Excavation, bedding, backfill, and compaction for side sewers shall conform to the requirements of the Bothell Standards, and to Standard Details 470 and 471.

Side sewers shall have a minimum cover of 5 feet in the public right-of-way and 2 feet inside the property line, unless otherwise approved by the Public Works Director.

6-9.5 SIZING SIDE SEWERS

That portion of a side sewer located within the public right-of-way shall have a minimum diameter of 6 inches.

That portion of a side sewer located on private property shall have a minimum diameter of 4 inches for single family residences, and 6 inches for all other uses, except for high-consumption uses, which are determined by the Public Works Director on a case-by-case basis.

6-9.6 SLOPE OF SIDE SEWERS

Side sewers shall have a minimum slope of 2 percent, unless otherwise approved by the Public Works Director. A flapper, swing valve, or other approved device shall be installed when, in the opinion of the Public Works Director, there exists a reasonable possibility of sanitary sewer backup from the sewer main into the residence or business.

6-9.7 FITTINGS AND CLEANOUTS FOR SIDE SEWERS

All fittings shall be factory produced and shall be designed for installation on the pipe to be used. Fittings shall be of the same quality and material as the pipe used, except when installing a PVC insert on existing pipe.

Side sewers shall be connected to the tee, wye, or riser provided in the sewer main, where such is available, utilizing approved fittings or adapters. Where no tee, wye, or riser is provided or available, connection shall be made by core drilling and installing an approved tee. Tees shall be Romac Industries, Style CG or approved equal.

All side sewers shall have a 6-inch cleanout at the property line as shown on Standard Detail 602. The riser portion of the cleanout shall be PVC, unless otherwise approved by the City construction inspector. Cleanouts shall be spaced no more than 100 feet apart.

6-9.8 TRACER TAPE

Tracer tape shall be installed over non-metallic sewer mains and side sewer pipes and stubs. The tracer tape shall be placed approximately 1 foot above the top of the pipe along its entire length.

Tracer tape shall be 6 inches wide Lineguard Type II Detectable, or approved equal, and shall be marked, "sewer."

6-9.9 TESTING OF SIDE SEWERS

All side sewers shall be tested after backfill. Side sewers that are reconstructed or repaired to a length of 10 feet or more shall be tested for watertightness. Testing will not be required for newly reconstructed sections of side sewers consisting of a single length of pipe. Testing shall be performed in the presence of the City construction inspector in accordance with Section 6-7.12.

When a new side sewer is installed, the entire length of new pipe shall be tested. In cases where a new tap is made on the main, the first joint of pipe off the main shall be installed with a test tee, so that an inflatable rubber ball can be inserted for sealing off the side sewer installation for testing. In cases where the side sewer stub is existing to the property line, the test ball may be inserted through the cleanout wye to test the new portion of the side sewer installation.

6-9.10 SIDE SEWER AS-BUILTS

The developer shall submit a side sewer as-built drawing to the construction inspector at the time of the side sewer inspection. The side sewer as-built drawing shall show the following:

1. Property boundaries, with dimensions, north arrow, and abutting streets.
2. Location and size of existing buildings.
3. Location of the side sewer, its connection with the building, and the pipe material and diameter.
4. The depth and point of connection of the side sewer to the sanitary sewer main.
5. Any additional information the construction inspector deems pertinent.

6-10 SEPTIC TANKS

Septic systems are generally not allowed within the City. If the Public Works Director determines that public sanitary sewer service is not available or that it is not practical , a septic tank system may be installed upon approval by the Public Works Director and issuance of a septic permit by the Snohomish Health District or King County Public Health, depending on the property location.

6-11 LIFT (PUMP) STATIONS

All side sewers must gravity flow into the City's sanitary sewer system. Bothell does not promote construction of individual side sewer pumps or public lift stations. The City will only consider these methods if a gravity system cannot be constructed. Private pressure side sewer lines are not permitted within the public right-of-way. If a gravity system cannot reasonably be constructed and a non-gravity system has been approved by the Public Works Director, the private pressure lines must enter a manhole on private property and gravity flow into the public system with a standard side sewer connection. The minimum manhole size permitted for this application is 30 inches in diameter. The manhole shall be installed with a locking lid frame and cover as per Standard Detail 621.

Construction plans for lift stations must be reviewed and approved by the Public Works Director. The following items shall be considered for each application:

1. Lift stations are to use submersible pumps.
2. Public lift stations must be set up with auxiliary power, including an automatic transfer switch.
3. Provisions for telemetry and/or alarms shall be required.

6-12 GREASE TRAPS AND INTERCEPTORS

Grease traps and interceptors shall be installed and sized according to the criteria in the Uniform Plumbing Code (UPC). Grease traps and interceptors shall be located on private property, and shall remain privately owned and maintained at the owner's or occupant's expense. These facilities shall be available for inspection by the Public Works department with a 24 hour verbal notification to the occupant or property owners.

Grease interceptors shall be designed using standard engineering principles for sedimentation and flotation in gravity separators. The grease interceptor will have a minimum of two compartments with fittings designed for grease retention.

The grease interceptor shall be installed so that it is easily accessible for sample collection, inspection, and cleaning and removal of retained grease.

The grease interceptor shall not be installed in any part of the building and the location shall meet the approval of the City.

Grease interceptors shall be located in the food service establishment's lateral line between all fixtures that may introduce grease into the sanitary sewer and the connection to the sanitary sewer collection system. Such fixtures shall include, but not be limited to, sinks, dishwashers, floor drains in food preparation and storage areas, mop sinks, and any other fixture that is determined to be a potential source of grease.

Grease interceptors must be vented. (Check venting requirements with Plumbing).

Flushing the grease interceptor or grease trap with water hotter than 140 degrees Fahrenheit is prohibited (UPC 1014.1B). Grease traps shall be equipped with a device to control the rate of flow through the unit. The rate of flow in gallons per minute shall not exceed the manufacturer's recommendation for the unit.

APPENDIX D

SEWER OVERFLOW RESPONSE PLAN

CITY OF BOTHELL

Sewer Overflow Response Plan (SORP)

City of Bothell™

TABLE OF CONTENTS

SECTION **PAGE NO.**

I. Authority 1
II. General 1
  A. Objectives 1
  B. Organization of Plan 1
III. Overflow Response Procedure 2
  A. Receipt of Information Regarding an SSO 2
  B. Dispatch of Sewer Maintenance Personnel to Site of Sewer Overflow 3
  C. Overflow Correction, Containment, and Cleanup 5
  D. Sewage Overflow Report 8
  E. Customer Satisfaction 9
IV. Public Advisory Procedure 9
  A. Temporary Signage 9
  B. Other Public Notification 10
V. Regulatory Agency Notification Plan 10
  A. Immediate Notification 10
  B. Secondary Notification 11
VI. Maintenance of SORP 11
VII. Appendices 11

I. AUTHORITY

This Sewer Overflow Response Plan (SORP) is prepared pursuant to SPDES, to facilitate proper incident reporting procedures outlined in _____ Operating in Accordance with a SPDES Permit, specifically ____ incident Reporting.

II. GENERAL

The Sewer Overflow Response Plan (SORP) is designed to ensure that every report of a sewage overflow incident is immediately dispatched to the appropriate the City of Bothell Sewer Department personnel for confirmation. Quick response will minimize the effects of the overflow with respect to impacts on public health, beneficial uses and water quality of surface waters and on customer service. The SORP further includes provisions to ensure safety pursuant to the directions provided by the Department of Ecology (DOE) and that notification and reporting is made to the DOE and Washington State Department of Health (WADOH) when applicable. For purposes of this SORP, "confirmed sewage spill" is also sometimes referred to as "sewer overflow," "overflow," or "SSO."

A. Objectives

The primary objective of the SORP is to protect public health and the environment, satisfy regulatory agencies and waste discharge permit conditions which address procedures for managing sewer overflows, and minimize risk of enforcement actions against the City of Bothell, sewer system owner.

Additional objectives of the SORP are as follows:

- Protect collection system personnel;
- Protect the collection system, wastewater treatment facilities, and all appurtenances; and
- Protect private and public property beyond the collection and treatment facilities.

B. Organization of Plan

The key elements of the SORP are addressed individually as follows:

Section III – Overflow Response Procedure
Section IV – Public Advisory Procedure
Section V – Regulatory Agency Notification Procedure
Section VI – Maintenance of SORP
Section VII – Appendices

III. OVERFLOW RESPONSE PROCEDURE

The Overflow Response Procedure presents a strategy for the City of Bothell Sewer Department to mobilize labor, materials, tools and equipment to correct or repair any condition, which may cause or contribute to an unpermitted discharge. The plan considers a wide range of potential system failures that could create an overflow to surface waters, land or buildings.

A. Receipt of Information Regarding an SSO

An overflow may be detected by City employees or by others. The City of Bothell employees is responsible to act based on received phone calls or reports on possible sewage overflow from the wastewater disposal system, and to provide immediate response to investigate and/or correct reported sewer overflow. Generally, telephone calls from the public reporting possible sewer overflows are received at the public offices identified in Appendix D.

1. The telephone operator obtains all relevant information available regarding the overflow including:

    a. Time and date call was received;
    b. Specific location;
    c. Description of problem;
    d. Time possible overflow was noticed by the caller;
    e. Caller's name and phone number;
    f. Observations of the caller; and
    g. Other relevant information that will enable the City of Bothell Water and Sewer Department, to quickly locate, assess and stop the overflow.

    The telephone operator records initial information in the Sewage Overflow Report (Ref. Appendix A) and notifies the City of Bothell Sewer Department.

2. The City of Bothell Sewer Department dispatches sewer maintenance personnel to confirm the overflow. Until verified, the report of a possible spill will not be referred to as a "sewer overflow." The City of Bothell Sewer Department completes the Sewage Overflow Report (Ref. Appendix A) within 24 hours of the sewer overflow confirmation and provides the information orally to the DOE. If the overflow will affect bathing areas during the bathing season, or public drinking water intakes, the City shall notify the DOE contact person and the DOH contact person orally, within two hours of becoming aware of the discharge.

If the overflow results in a fish kill, notify the DOE contact person within two hours of becoming aware of the discharge. The City of Bothell Sewer Department Supervisor is responsible for reviewing, updating and signing the final Sewage Overflow Report. Sewage overflow response tracking protocol is summarized in Appendix C.

B. Dispatch of Sewer Maintenance Personnel to Site of Sewer Overflow

Failure of any element within the wastewater disposal system that threatens to cause or causes a SSO must trigger an immediate response to isolate and correct the problem. Personnel and equipment must be available to respond to any SSO locations. Additional maintenance personnel shall be "on call" in the event extra manpower is needed. Summary of Sewer Overflow Action Plan is included in Appendix C.

1. Dispatching Maintenance Personnel

   - When the City of Bothell receives notification of a potential sewer overflow outlined in Section A, the City of Bothell Sewer Department dispatches maintenance personnel with appropriate resources as required.

2. Maintenance Personnel Instructions

   - Dispatch maintenance personnel by telephone or radio. Assign and appropriate personnel, materials, supplies and equipment needed.

   - The telephone operator must verify that the entire message has been received and acknowledged by the maintenance personnel who were dispatched. All personnel being dispatched to the site of an SSO proceed immediately to the site of the overflow. Report any delays or conflicts in assignments immediately for resolution.

   - In all cases response maintenance personnel report their findings, including possible damage to private and public property, to the City of Bothell Sewer Department Supervisor immediately upon making their investigation. If the City of Bothell Sewer Department Supervisor has not received findings from the field crew within 1 hour the City of Bothell Sewer Department Supervisor contacts the response maintenance personnel to determine the status of the investigation.

3. Additional Resources

The City of Bothell Sewer Department Supervisor receives and conveys to appropriate parties requests for additional personnel, material, supplies, and equipment for maintenance personnel working at the site of a sewer overflow.

4. Preliminary Assessment of Damage to Private and Public Property

The City of Bothell maintenance personnel shall use discretion in their actions as reasonably as they can. They must be aware that the customer could face increased liability for any further damages inflicted to private property during such assistance. The City of Bothell maintenance personnel shall not enter private property for purposes of assessing damage unless authorized by the City of Bothell Sewer Department Supervisor. The City of Bothell maintenance personnel shall take appropriate still photographs and/or video footage; if possible, of the sewer overflow impacted area in order to thoroughly document the nature and extent of impacts. Retain photographs for filing with the Overflow Report.

5. Field Supervision and Inspection

- The City of Bothell Sewer Department Supervisor visits the site of the sewer overflow to ensure that provisions of this Overflow Response Plan and other directives are met.

- The City of Bothell Sewer Department Supervisor is responsible for verbally notifying DOE and WADOH within the specified time and submitting the Overflow Report to DOE.

6. Coordination with Hazardous Material Response

- Upon arrival at the scene of a sewer overflow, should a suspicious substance (e.g., oil sheen, foamy residue) be found on the ground surface, or should a suspicious odor (e.g., gasoline) not common to the sewer system be detected, the City of Bothell sewer maintenance crew shall immediately contact the City of Bothell Sewer Department Supervisor for guidance before taking further action.

- Should the City of Bothell Sewer Department Supervisor determine the need to alert the hazardous material response team, the maintenance personnel awaits the contracted hazardous waste team response.

- Contact the DOE 24-hour Spill Hotline at 1-425-649-7000.

- Upon arrival of the hazardous material response team, the City of Bothell Sewer maintenance personnel take direction from the person with the lead authority of that team. Only when that authority determines it is safe and appropriate for the City of Bothell sewer maintenance personnel to proceed under the SORP with the containment, clean-up activities and correction.

C. Overflow Correction, Containment, and Cleanup

This section describes specific actions to be performed by the City of Bothell sewer maintenance personnel during a SSO. The objectives of these actions are:

- To protect public health, environment and property from sewage overflows and restore surrounding area back to normal as soon as possible;

- To establish perimeters and control zones with appropriate traffic cones and barricades, vehicles or use of natural topography (e.g., hills, berms);

- To promptly notify the regulatory agency with preliminary overflow information and potential impacts;

- To contain the sewer overflow to the maximum extent possible including preventing the discharge of sewage into surface waters; and

- To minimize the customer's exposure to any regulatory agency penalties and fines. Under most circumstances, the City of Bothell can handle all response actions with its own maintenance forces. They have the skills and experience to respond rapidly and in the most appropriate manner. An important issue with respect to an emergency response is to ensure that the temporary actions necessary to divert flows and repair the problem do not produce a problem elsewhere in the system. Circumstances may arise when the City of Bothell could benefit from the support of private-sector construction assistance. This may be true in the case of large diameter pipes buried to depths requiring sheet piling and dewatering should excavation be required. The City of Bothell may also choose to use private contractors for open excavation operations that might exceed one day to complete.

1. Responsibilities of the City of Bothell sewer maintenance personnel upon arrival:

   It is the responsibility of the first personnel who arrive at the site of a sewer overflow to protect the health and safety of the public by mitigating the impact of the overflow to the maximum extent possible. Should the overflow not be the responsibility of the City of Bothell but there is imminent danger to public health, public or private property or to the quality of waters of the state, then the City of Bothell Sewer Department Supervisor takes prudent emergency action until the responsible party assumes responsibility and provides actions.

   Upon arrival at a SSO, the City of Bothell sewer maintenance personnel perform the following:

   - Determines the cause of the overflow, e.g. sewer line blockage, pump station mechanical or electrical failure, sewer line break, etc.

   - Identifies and requests assistance or additional resources to correct the overflow or to assist in determination of its cause;

   - Takes immediate steps to stop the overflow, e.g. relieves pipeline blockage, manually operates pump station controls, repairs pipe, etc. Extraordinary steps may be considered where overflows from private property threaten public health and safety (e.g., an overflow running off of private property into the public right-of-way); and

   - Requests additional personnel, materials, supplies, or equipment that will expedite and minimize the impact of the overflow.

2. Initial Measures for Containment

   - Initiate measures to contain the overflowing sewage and recover where possible sewage, which has already been discharged, minimizing impact to public health or the environment.

   - Determine the immediate destination of the overflow, e.g., storm drain, street curb gutter, body of water, stream bed, etc.

   - Identify and request the necessary materials and equipment to contain or isolate the overflow, if not readily available; and

   - Take immediate steps to contain the overflow, e.g., block or bag storm drains, recover through vacuum truck, divert into downstream manhole, etc.

3. Additional Measures under Potentially Prolonged Overflow Conditions

In the event of a prolonged sewer line blockage or a sewer line collapse, set up a portable by-pass pumping operation around the obstruction.

- Take appropriate measures to determine the proper size and number of pumps required to effectively handle the sewage flow.
- Implement continuous or periodic monitoring of the bypass pumping operation as required.
- Address regulatory agency issues in conjunction with emergency repairs.

4. Cleanup

Clean sewer overflow sites thoroughly after an overflow. No readily identified residue (e.g., sewage solids, papers, rags, plastics, and rubber products) is to remain.

- Whenever possible digital photos should be taken of the area before and after cleanup.
- Where practical, thoroughly flush the area and clean of any sewage or wash-down water. Solids and debris are to be flushed, swept, raked, picked-up, and transported for proper disposal.
- Secure the overflow area to prevent contact by members of the public until the site has been thoroughly cleaned.
- Where appropriate, disinfect and deodorize the overflow site.
- Where sewage has resulted in ponding, pump the pond dry and dispose of the residue in accordance with applicable regulations and policies.
- If a ponded area contains sewage, which cannot be pumped dry, it may be treated with bleach. If sewage has discharged into a body of water that may contain fish or other aquatic life, do not use bleach. Contact the DOE for specific instructions.

D. Sewage Overflow Report

The Sewer Overflow Report in Appendix A contains information which is required to be reported to DOE and possibly to WADOH depending upon the nature of the spill. If the overflow will affect bathing areas during the bathing season, or public drinking water intakes, the City of Bothell shall notify the DOE contact person and the WADOH contact person orally, within two hours of becoming aware of the discharge. If the overflow results in a fish kill, notify the DOE contact person within two hours of becoming aware of the discharge.

The City of Bothell Sewer Department Supervisor completes a Sewer Overflow Report (Ref. Appendix A). The City of Bothell Sewer Department Supervisor promptly notifies the City of Bothell Office and DOE when the overflow is eliminated.

Information regarding the sewer overflow includes the following:

- Determination if the sewage overflow had reached surface waters, i.e., all overflows where sewage was observed running to surface waters, or there was obvious indication (e.g., sewage residue) that sewage flowed to surface waters; and

- Determination that the sewage overflow had not reached surface waters by describing conditions at the sewage overflow, which support this determination.

- Determination of the start time of the sewer overflow by one of the following methods:

    a. Date and time information received and/or reported to have begun and later substantiated by the City of Bothell sewer maintenance personnel;

    b. Visual observation.

- Determination of the stop time of the sewer overflow by one of the following methods:

    a. When the blockage is cleared or flow is controlled or contained; or

    b. The arrival time of the City of Bothell sewer maintenance personnel, if the overflow stopped between the time it was reported and the time of arrival.

- Visual observations

  An estimation of the rate of sewer overflow in gallons per minute (gpm) by one of the following criteria:

  a. Direct observations of the overflow; or

  b. Measurement of actual overflow rate from the sewer main.

- Determination of the volume of the sewer overflow.

- Photographs of the event, when possible.

- Assessment of any damage to the exterior areas of public/private property. The City of Bothell sewer maintenance personnel shall not enter private property for purposes of estimating damage to structures, floor and wall coverings, and other personal property without authorization from the City of Bothell Sewer Department Supervisor.

E. Customer Satisfaction

The City of Bothell Sewer Department Supervisor follows up in person or by telephone with the entity who was reporting the overflow. The cause of the overflow and its resolution will be disclosed.

IV. PUBLIC ADVISORY PROCEDURE

This section describes the actions the City of Bothell will take, in cooperation with the DOE and/or WADOH, to limit public access to areas potentially impacted by unpermitted discharges of pollutants to surface water bodies from the wastewater collection system.

A. Temporary Signage

The City of Bothell has primary responsibility for determining when to post notices of polluted surface water bodies or ground surfaces that result from uncontrolled wastewater discharges from its facilities. The postings do not necessarily prohibit use of recreational areas, unless posted otherwise, but provide a warning of potential public health risks due to sewage contamination.

The City of Bothell Sewer Department Supervisor and City elected official determine if posting of a confirmed overflow is necessary.

B. Other Public Notification

Should the posting of surface water bodies or ground surfaces subjected to a sewer overflow be deemed necessary by the City of Bothell Sewer Department, the City of Bothell Sewer Department Supervisor will determine the need for further public notification.

V. REGULATORY AGENCY NOTIFICATION PLAN

The Regulatory Agency Notification Plan establishes procedures, which the City of Bothell follows to provide formal notice to the WADOH as necessary in the event of a SSO.

Agency notifications will be performed in parallel with other internal notifications. Internal notification and mobilization of the City of Bothell sewer maintenance personnel are established in Section III – Overflow Response Procedure.

Using data supplied during the verification process and updates from the maintenance personnel, the City of Bothell Sewer Department Supervisor prepares initial and final Overflow Reports. Initial report will be provided orally to the DOE and if necessary the local health department within either 2 hours or 24 hours from the time the City became aware of the SSO. If the overflow will affect bathing areas during the bathing season, or public drinking water intakes, the City shall notify the DOE contact person and the WADOH contact person orally, within two hours of becoming aware of the discharge. If the overflow results in a fish kill, notify the DOE contact person within two hours of becoming aware of the discharge.

Prepare and provide final report to the regulatory agency within 5 days after the City of Bothell becomes aware of the overflow. Submit by mail. The City of Bothell Sewer Department Supervisor is responsible for meeting the notification requirement. The City of Bothell Sewer Department Supervisor prepares written notification to the appropriate regulatory agency of any confirmed overflows. The City of Bothell Water and Sewer Department Supervisor signs these notifications. The DOE contact person may waive the written report requirement on a case-by-case basis if the oral report was received within the required time frame. Regardless of other notifications, a Report of Noncompliance form is required to be submitted with the monthly Discharge Monitoring Report.

A. Immediate Notification

If the overflow will affect bathing areas during the bathing season, or public drinking water intakes, the City of Bothell shall notify the DOE contact person and the WADOH contact person orally, within two hours of becoming aware of the discharge. If the overflow results in a fish kill, notify the DOE contact person within two hours of becoming aware of the discharge. Fax the initial and any updated Sewer Overflow Report to:

DOE, Your Regional Water Manager or inspector and Address,
Attn: Your Regional Water Manager or inspector
Address
Telephone:
Fax:

B. Secondary Notification

The City of Bothell Sewer Department Supervisor may contact other agencies, as necessary, as well as other interested and possibly impacted parties.

VI. MAINTENANCE OF SORP

The SORP will be reviewed on an annual basis. Possible amendments can include:

- Change in procedures
- Change in contact personnel
- Changes due to regulatory requirements

VII. APPENDICES

Appendix A – Sanitary Sewer Overflow Report Form
Appendix B – Sewer Overflow Notice Plan Flow Chart
Appendix C – Sewer Overflow Response Tracking Protocol
Appendix D – List of Public Offices to Report Overflow
Appendix E – Suggested Criteria for Demonstrating How a Sewer Overflow was Unavoidable
Appendix F – Measures to Avoid Sewer Overflow
Appendix G – Overflow Descriptions and Required Notifications

APPENDIX A

SANITARY SEWER OVERFLOW REPORT FORM

1. General Information

a. SPDES # : _____

b. Name of collection system: _____

c. Authorized representative filing this form:

Name: _____

Title: _____

e-mail Address: _____

d. Type of filing report:

! Initial
! Final

e. Date of filing report:

! Initial _____
! Final _____

2. Oral Reporting of Overflow, Bypass or Upset

All releases of untreated or partially treated sewage require 24-hour oral notification except those that require 2-hour oral notification.

a. Overflow requiring 2-hour notification.

! Impact or closure of bathing area
! Impact or closure of public drinking water intake
! Results in fish kills
! Other: _____

b. Overflow requiring 24-hour notification.

- ! Gravity sewer manhole
- ! Pump station
- ! Treatment plant bypass
- ! Other

c. Oral report to DOE contact person.

Name: _____

Phone Number: _____

e-mail Address: _____

DOE Office: _____

Date of phone notification: ____/____/____

d. Oral report to local Health Department contact person.

Name: _____

Phone Number: _____

e-mail Address: _____

Health Department Office: _____

Date of phone notification: ____/____/____

3. Overflow Location and Description

a. Location

City/Town:_____

Address or Landmark:_____

b. Discharge Location:

- ! Directly to receiving ground water
- ! Ground
- ! Receiving water via storm drain
- ! Building

c. Type of overflow

! Gravity sewer manhole
! Pump station
! Bypass at treatment plan
! Other _____
_____

4. Time of Overflow/Bypass Incident

- When did the incident begin? Date: ____/____/____

- Was the overflow/bypass event ongoing at the time of report: # Yes # No

If yes, how long is the incident expected to continue? _____

If no, when did event end? Date: ____/____/____ Time: _____

5. General Information about Overflow at this Location

a. Estimated volume of overflow released at time of report: _____

b. Method of estimating volume: _____

c. Estimated total volume of overflow released at end of incident: _____

d. Were digital photos taken: # Yes # No

e. Corrective measures taken:

! No action
! Removed blockage
! Repair pump station
! Other: _____
_____
_____
_____

f. Cause of overflow/bypass (select all those that apply):

! Rain
! Snow melt
! High ground water
! Other excessive flow

! Sewer system blockage or collapse
! Pump /lift station failure
! Other: _____
_____
_____

g. Additional comment: _____
_____
_____

FIVE DAY WRITTEN INCIDENT REPORT

Complete the first five sections of this notification form and use the space below to include any additional information regarding the overflow. Include any steps taken or planned to prevent a recurrence. Submit this form to the regional DOE office within five days of becoming aware of the incident. _____
_____
_____
_____
_____
_____
_____
_____
_____
_____
_____
_____
_____
_____
_____

APPENDIX B

SEWER OVERFLOW NOTICE PLAN FLOW CHART

WASTEWATER DISPOSAL SYSTEM

POSSIBLE SEWER OVERFLOW REPORTED

CITY OF BOTHELL WASTEWATER AND SEWER

DEPARTMENTS NOTIFIED, MAINTENANCE PERSONNEL MOBILIZED

SEWER OVERFLOW CONFIRMED

NO SEWER OVERFLOW CONFIRMED

FILE REPORT, NOTIFY CALLER MAKING REPORT

PERFORM EVALUATION, DETERMINE CAUSE AND CORRECTIVE ACTION

COMPLETE INITIAL REPORT

NOTIFY DOE/WADOH

> **2 Hour Criteria**
> **24 Hour Criteria**
> **(See Appendix G)**

CORRECT CAUSE OF OVERFLOW

CLEAN IMPACTED AREA

COMPLETE FINAL REPORT

SEND REPORT TO DOE

> **Within 5 Days**

NOTIFY PERSONS IMPACTED BY THE OVERFLOW

APPENDIX C

SEWER OVERFLOW (SSO) RESPONSE TRACKING PROTOCOL WASTEWATER DISPOSAL SYSTEM

STEP EVENT

1. Report of possible SSO received by a telephone operator.

2. Telephone Operator enters received information into Sewer Overflow Report.

3. Telephone Operator contacts the City Sewer Department, which then deploys maintenance personnel to confirm, reported SSO.

4. Maintenance personnel reports back to the City of Bothell Sewer Department Supervisor reporting significance of the overflow.

5. The City of Bothell Sewer Department Supervisor completes initial Overflow Report. If the overflow will affect bathing areas during the bathing season, or public drinking water intakes, the City shall notify the DOE contact person and the WADOH contact person orally, within two hours of becoming aware of the discharge. If the overflow results in a fish kill, notify the DOE contact person within 2 hours of becoming aware of the discharge.

6. Within 5 days the City of Bothell Sewer Department Supervisor prepares final Overflow Report. Report is mailed to DOE.

7. Data from Overflow Report are entered into a permanent record on file at the City of Bothell Water and Sewer Department.

8. Attach Report of Noncompliance to Discharge Monitoring Report.

APPENDIX D

LIST OF PUBLIC OFFICES TO REPORT SSO WASTEWATER DISPOSAL SYSTEM

Contact	**Telephone**
Main Office	425.488.2768
City of Bothell Public Works Superintendent	425.488.0118 x 6852
City of Bothell Sewer Supervisor	425.488.0118 x 6855
Fire Department - Station #42	425.486.1678
Bothell Police	425.486.1254
Department of Ecology Spill Response	425.649.7000
Washington State Department of Health	877.481.4901

APPENDIX E

SUGGESTED CRITERIA FOR DEMONSTRATING HOW A SEWER OVERFLOW WAS UNAVOIDABLE

SSO's can be demonstrated as unavoidable by showing the discharge meets each of the criteria 1 through 5.

1. The discharge resulted from a temporary, exceptional incident that was either:

    A. Necessary to prevent loss of life, personal injury, or severe property damage.

    B. Beyond the reasonable control of the operator. Incidents beyond the reasonable control of the operator would include:

    - Exceptional acts of nature;
    - Third party actions that could not be reasonably prevented, including vandalism that could not be avoided by reasonable measures;
    - Blockages that could not be avoided by reasonable measures;
    - Unforeseeable sudden structural, mechanical, or electrical failure that could not be avoided by reasonable measures.

2. The discharge had no feasible alternative.

3. The discharge was not caused by any of the following:

    A. Operational error;

    B. Improperly designed or constructed collection system facilities;

    C. Inadequate collection system facilities or components;

    D. The lack of appropriate preventive maintenance; or

    E. Careless or improper oversight.

4. Steps to stop the discharge, address the source of the problem, and mitigate potential impacts from the discharge were taken as soon as possible after becoming aware of the release.

APPENDIX F

MEASURES TO AVOID SEWER OVERFLOW

A. Proper Collection System Maintenance and Operations Program

- Cleaning of pipes (grease, roots deposits).
- Sealing or maintenance for deteriorating sewers.
- Remediation of poor/substandard construction (short term).
- Sewer replacement or rehabilitation program (long term).
- Proper maintenance and operations of pump stations.
- Inspection of private laterals.

B. New Wastewater Disposal System Construction

- Use latest technology and standards in constructing new wastewater disposal system improvements.
- Perform proper construction inspection/quality assurance procedures.

APPENDIX G

OVERFLOW DESCRIPTIONS AND REQUIRED NOTIFICATION

Overflows requiring 2-Hour Verbal Notification

- Impact or closure of bathing area during bathing season (DOE & WADOH)
- Impact of closure of public drinking water intake (DOE & WADOH)
- Results in a fish kill (DOE)

Overflows Requiring 24-Hour Notification (DOE only)

- Gravity sewer manhole
- Pump station
- Sewer siphon
- Treatment plant bypass

Department of Ecology
Regional Water Manager
Address Street

Phone: 360.407.6300
Fax:
Email
After Hours:

APPENDIX E

MODELING DATA AND RESULTS

City of Bothell Sewer Comprehensive Plan
Sewer Model Input (Existing Scenario)

			Inflow & Infiltration		Residential		Commercial		School					
Basin	Catchment	Input MH	Area (ac)	Rate (gpad)	Population	Area (ac)	Employees	Area (ac)	Students	Area (ac)	Flow (gpd)	Flow (gpm)	I/I (gpd)	I/I (gpm)
Brickyard	1	93066	3.32	1,941	39	3.3	0.0	0.0	0.0	0.0	1,955	1.36	6,444	4.5
Brickyard	2	1565	5.79	1,941	41	5.8	0.0	0.0	0.0	0.0	2,070	1.44	11,242	7.8
Brickyard	3	93030	2.47	1,941	41	2.5	0.0	0.0	0.0	0.0	2,070	1.44	4,803	3.3
Brickyard	4	93025	9.34	1,941	173	9.3	0.0	0.0	0.0	0.0	8,630	5.99	18,125	12.6
Brickyard	5	1572	5.40	1,941	62	5.4	0.0	0.0	0.0	0.0	3,105	2.16	10,475	7.3
Brickyard	6	1576	5.77	1,941	74	5.8	0.0	0.0	0.0	0.0	3,680	2.56	11,198	7.8
Brickyard	7	93034	5.76	1,941	78	5.8	0.0	0.0	0.0	0.0	3,910	2.72	11,188	7.8
Brickyard	8	93056	10.22	1,941	161	10.2	0.0	0.0	0.0	0.0	8,050	5.59	19,829	13.8
Brickyard	9	94010	21.06	1,941	5	7.9	184.4	13.1	0.0	0.0	5,762	4.00	40,879	28.4
Brickyard	10	93019	11.85	1,941	196	11.8	0.0	0.0	0.0	0.0	9,775	6.79	23,000	16.0
Brickyard	12	94023	27.75	1,941	774	27.8	0.0	0.0	0.0	0.0	38,675	26.86	53,872	37.4
Brickyard	13	16411	10.15	1,941	85	10.2	0.0	0.0	0.0	0.0	4,255	2.95	19,710	13.7
Brickyard	14	93065	2.67	1,941	2	0.1	35.4	2.5	0.0	0.0	1,178	0.82	5,192	3.6
Brickyard	15	93070	4.08	1,941	37	4.1	0.0	0.0	0.0	0.0	1,840	1.28	7,913	5.5
Brickyard	16	93074	3.92	1,941	32	3.9	0.0	0.0	0.0	0.0	1,610	1.12	7,600	5.3
Brickyard	17	2059	0.00	1,941	0	0.0	0.0	0.0	0.0	0.0	-	-	-	-
Brickyard	18	93075	0.00	1,941	0	0.0	0.0	0.0	0.0	0.0	-	-	-	-
Camden	1	53091	3.67	911	41	3.7	0.0	0.0	0.0	0.0	2,070	1.44	3,340	2.3
Camden	2	54063	13.40	911	136	13.4	0.0	0.0	0.0	0.0	6,785	4.71	12,204	8.5
Camden	3	54089	5.89	911	60	5.9	0.0	0.0	0.0	0.0	2,990	2.08	5,362	3.7
Camden	4	323001	16.39	911	122	16.4	0.0	0.0	0.0	0.0	6,095	4.23	14,931	10.4
Camden	5	54105	3.68	911	37	3.7	0.0	0.0	0.0	0.0	1,840	1.28	3,353	2.3
Camden	6	54091	6.40	911	67	6.4	0.0	0.0	0.0	0.0	3,335	2.32	5,827	4.0
Camden	7	53099	3.42	911	39	3.4	0.0	0.0	0.0	0.0	1,955	1.36	3,120	2.2
Camden	8	53096	2.98	911	32	3.0	0.0	0.0	0.0	0.0	1,610	1.12	2,716	1.9
Camden	9	323011	4.91	911	48	4.9	0.0	0.0	0.0	0.0	2,415	1.68	4,473	3.1
Camden	10	53104	16.61	911	313	16.6	0.0	0.0	0.0	0.0	15,660	10.88	15,136	10.5
Camden	11	54096	6.53	911	76	6.5	0.0	0.0	0.0	0.0	3,795	2.64	5,952	4.1
Camden	12	53082	3.16	911	37	3.2	0.0	0.0	0.0	0.0	1,840	1.28	2,881	2.0
Camden	13	53097	2.72	911	30	2.7	0.0	0.0	0.0	0.0	1,495	1.04	2,475	1.7
Camden	14	53086	3.01	911	35	3.0	0.0	0.0	0.0	0.0	1,725	1.20	2,745	1.9
Camden	15	54099	12.26	911	14	2.3	0.0	0.0	760.0	9.9	12,850	8.92	11,166	7.8
Camden	16	323019	3.90	911	39	3.9	0.0	0.0	0.0	0.0	1,955	1.36	3,553	2.5
Camden	17	53116	23.29	911	1,451	16.0	102.2	7.3	0.0	0.0	75,596	52.50	21,213	14.7
Cedar Park	1	82017	60.97	1,120	725	49.0	140.3	10.0	1300.0	2.0	61,248	42.53	68,288	47.4
Cedar Park	2	1613	12.69	1,120	87	12.7	0.0	0.0	0.0	0.0	4,370	3.03	14,211	9.9
Downtown	1	53057	4.85	1,468	39	4.9	0.0	0.0	0.0	0.0	1,955	1.36	7,124	4.9
Downtown	2	81003	10.73	1,093	153	10.0	10.6	0.8	0.0	0.0	7,947	5.52	11,729	8.1
Downtown	3	84034	6.31	1,093	53	4.5	25.7	1.8	0.0	0.0	3,415	2.37	6,893	4.8
Downtown	4	53026	4.56	1,468	120	2.1	34.4	2.4	0.0	0.0	7,021	4.88	6,691	4.6
Downtown	5	84010	5.26	1,468	0	0.0	73.8	5.3	0.0	0.0	2,213	1.54	7,717	5.4

City of Bothell Sewer Comprehensive Plan
Sewer Model Input (Existing Scenario)

			Inflow & Infiltration		Residential		Commercial		School					
Basin	Catchment	Input MH	Area (ac)	Rate (gpad)	Population	Area (ac)	Employees	Area (ac)	Students	Area (ac)	Flow (gpd)	Flow (gpm)	I/I (gpd)	I/I (gpm)
Downtown	6	54059	3.37	1,468	37	3.4	0.0	0.0	0.0	0.0	1,840	1.28	4,941	3.4
Downtown	7	54061	2.47	1,468	0	0.0	34.7	2.5	0.0	0.0	1,040	0.72	3,626	2.5
Downtown	8	54062	2.17	1,468	25	2.2	0.0	0.0	0.0	0.0	1,265	0.88	3,186	2.2
Downtown	9	53087	2.77	1,468	32	2.8	0.0	0.0	0.0	0.0	1,610	1.12	4,060	2.8
Downtown	10	53089	4.13	1,468	32	4.1	0.0	0.0	0.0	0.0	1,610	1.12	6,064	4.2
Downtown	11	53059	5.65	1,468	53	5.7	0.0	0.0	0.0	0.0	2,645	1.84	8,297	5.8
Downtown	12	53074	4.01	1,468	32	4.0	0.0	0.0	0.0	0.0	1,610	1.12	5,887	4.1
Downtown	13	53063	4.34	1,468	34	1.5	38.2	2.7	0.0	0.0	2,825	1.96	6,367	4.4
Downtown	14	71028	12.97	1,468	68	2.8	142.4	10.1	0.0	0.0	7,647	5.31	19,042	13.2
Downtown	15	53048	6.66	1,468	173	6.7	0.0	0.0	0.0	0.0	8,656	6.01	9,772	6.8
Downtown	16	84090	3.87	1,093	7	0.4	48.6	3.5	0.0	0.0	1,804	1.25	4,226	2.9
Downtown	17	2098	10.86	1,093	572	6.4	62.2	4.4	0.0	0.0	30,487	21.17	11,873	8.2
Downtown	18	53036	4.38	1,468	177	3.2	16.9	1.2	0.0	0.0	9,369	6.51	6,430	4.5
Downtown	19	53006	6.86	1,468	137	6.9	0.0	0.0	0.0	0.0	6,845	4.75	10,077	7.0
Downtown	20	53067	4.74	1,468	124	4.7	0.0	0.0	0.0	0.0	6,190	4.30	6,954	4.8
Downtown	21	53003	3.58	1,468	35	3.6	0.0	0.0	0.0	0.0	1,725	1.20	5,257	3.7
Downtown	22	53068	2.12	1,468	38	2.1	0.0	0.0	0.0	0.0	1,905	1.32	3,114	2.2
Downtown	23	53018	2.16	1,468	91	2.2	0.0	0.0	0.0	0.0	4,570	3.17	3,172	2.2
Downtown	24	53047	5.95	1,468	229	6.0	0.0	0.0	0.0	0.0	11,460	7.96	8,741	6.1
Downtown	25	53072	2.94	1,468	21	2.9	0.0	0.0	0.0	0.0	1,035	0.72	4,319	3.0
Glenwood	1	54027	8.21	809	90	8.2	0.0	0.0	0.0	0.0	4,485	3.11	6,640	4.6
Glenwood	2	1508	14.13	809	120	14.1	0.0	0.0	0.0	0.0	5,980	4.15	11,431	7.9
Glenwood	3	54004	9.82	809	83	9.8	0.0	0.0	0.0	0.0	4,140	2.88	7,941	5.5
Glenwood	4	54030	3.94	809	44	3.9	0.0	0.0	0.0	0.0	2,185	1.52	3,188	2.2
Glenwood	5	312003	19.67	809	177	19.7	0.0	0.0	0.0	0.0	8,855	6.15	15,913	11.1
Glenwood	6	61016	50.76	809	528	26.9	118.3	8.4	720.0	7.8	41,464	28.79	41,067	28.5
Glenwood	7	61003	14.54	809	170	14.5	0.0	0.0	0.0	0.0	8,510	5.91	11,765	8.2
Glenwood	8	1610	7.60	809	58	7.6	0.0	0.0	0.0	0.0	2,875	2.00	6,151	4.3
Glenwood	9	1512	2.87	809	30	2.9	0.0	0.0	0.0	0.0	1,495	1.04	2,322	1.6
Glenwood	10	1681	36.23	809	459	36.2	0.0	0.0	0.0	0.0	22,970	15.95	29,309	20.4
Glenwood	11	54014	11.52	809	110	11.5	0.0	0.0	0.0	0.0	5,520	3.83	9,316	6.5
Glenwood	12	62077	7.34	809	91	6.2	16.0	1.1	0.0	0.0	5,006	3.48	5,934	4.1
Glenwood	13	61025	3.49	809	39	3.5	0.0	0.0	0.0	0.0	1,955	1.36	2,826	2.0
Glenwood	14	54052	20.02	809	166	17.3	38.2	2.7	0.0	0.0	9,425	6.55	16,194	11.2
Glenwood	15	1500	10.05	809	99	9.8	0.0	0.0	0.0	0.0	4,945	3.43	8,130	5.6
Morning Side	1	42057	10.21	1,301	193	10.2	0.0	0.0	0.0	0.0	9,660	6.71	13,280	9.2
Morning Side	2	42015	6.50	1,301	127	6.5	0.0	0.0	0.0	0.0	6,325	4.39	8,462	5.9
Morning Side	3	42024	5.69	1,301	90	5.7	0.0	0.0	0.0	0.0	4,485	3.11	7,403	5.1
Morning Side	4	41003	11.15	1,301	159	8.5	37.2	2.7	0.0	0.0	9,051	6.29	14,509	10.1
Morning Side	5	41050	7.48	1,301	133	7.5	0.0	0.0	0.0	0.0	6,670	4.63	9,737	6.8
Morning Side	6	41018	12.24	1,301	235	12.2	0.0	0.0	0.0	0.0	11,730	8.15	15,918	11.1

City of Bothell Sewer Comprehensive Plan
Sewer Model Input (Existing Scenario)

			Inflow & Infiltration		Residential		Commercial		School					
Basin	Catchment	Input MH	Area (ac)	Rate (gpad)	Population	Area (ac)	Employees	Area (ac)	Students	Area (ac)	Flow (gpd)	Flow (gpm)	I/I (gpd)	I/I (gpm)
Morning Side	7	41032	8.87	1,301	163	8.9	0.0	0.0	0.0	0.0	8,165	5.67	11,542	8.0
Morning Side	8	42032	2.48	1,301	48	2.5	0.0	0.0	0.0	0.0	2,415	1.68	3,230	2.2
North Creek	1	51038	24.69	1,301	260	24.7	0.0	0.0	0.0	0.0	12,995	9.02	32,121	22.3
Norway Hill	1	84083	24.48	1,093	766	15.3	100.8	7.2	0.0	0.0	41,319	28.69	26,760	18.6
Norway Hill	2	84070	48.44	1,093	819	40.3	114.5	8.2	0.0	0.0	44,410	30.84	52,944	36.8
Norway Hill	3	1541	0.25	1,093	2	0.3	0.0	0.0	0.0	0.0	115	0.08	273	0.2
Pioneer Hill	1	42082	4.05	1,301	39	4.1	0.0	0.0	0.0	0.0	1,955	1.36	5,271	3.7
Pioneer Hill	2	91013	7.53	1,301	90	7.5	0.0	0.0	0.0	0.0	4,485	3.11	9,801	6.8
Pioneer Hill	3	2107	3.80	1,301	46	3.8	0.0	0.0	0.0	0.0	2,300	1.60	4,946	3.4
Pioneer Hill	4	42066	9.30	1,301	0	0.0	0.0	0.0	681.0	9.3	10,896	7.57	12,099	8.4
Pioneer Hill	5	41041	6.14	1,301	58	6.1	0.0	0.0	0.0	0.0	2,875	2.00	7,986	5.5
Pioneer Hill	6	1602	4.11	1,301	28	4.1	0.0	0.0	0.0	0.0	1,380	0.96	5,347	3.7
Pioneer Hill	7	42060	7.07	1,301	159	7.1	0.0	0.0	0.0	0.0	7,935	5.51	9,195	6.4
Pioneer Hill	8	42085	9.06	1,301	85	9.1	0.0	0.0	0.0	0.0	4,255	2.95	11,781	8.2
Pioneer Hill	9	2137	55.71	1,301	1,953	55.7	0.0	0.0	0.0	0.0	97,650	67.81	72,483	50.3
Pioneer Hill	10	42087	14.09	1,301	289	14.1	0.0	0.0	0.0	0.0	14,445	10.03	18,331	12.7
Pioneer Hill	11	1535	2.31	1,301	32	2.3	0.0	0.0	0.0	0.0	1,610	1.12	3,005	2.1
S UW	1	81010	15.78	1,301	508	12.4	47.1	3.4	0.0	0.0	26,829	18.63	20,528	14.3
S UW	2	1667	124.28	1,120	2	0.6	5280.0	123.7	0.0	0.0	158,515	110.08	139,196	96.7
S UW	3	81014	9.50	1,120	272	9.5	0.0	0.0	0.0	0.0	13,601	9.45	10,641	7.4
SR522 West	1	71078	17.04	7,643	256	4.1	174.5	12.4	0.0	0.0	18,010	12.51	130,244	90.4
Staples Home Dep	1	1718	26.71	1,301	0	0.0	374.8	26.7	0.0	0.0	11,245	7.81	34,751	24.1
UW Cascadia	1	52012	0.00	1,301	0	0.0	0.0	0.0	0.0	0.0	-	-	-	-
Valley N 185th	1	43001	67.00	425	0	0.0	940.2	67.0	0.0	0.0	28,207	19.59	28,476	19.8
Valley N 185th	2	44011	11.43	425	0	0.0	160.4	11.4	0.0	0.0	4,811	3.34	4,857	3.4
Valley N 185th	3	43007	38.70	425	0	0.0	543.1	38.7	0.0	0.0	16,292	11.31	16,448	11.4
Valley N 185th	4	43020	50.13	425	0	0.0	703.5	50.1	0.0	0.0	21,105	14.66	21,306	14.8
Valley N 185th	5	44006	15.23	425	0	0.0	213.7	15.2	0.0	0.0	6,412	4.45	6,473	4.5
Valley N 185th	6	44003	27.13	425	0	10.1	239.3	17.1	0.0	0.0	7,178	4.98	11,530	8.0
Valley N 185th	7	2083	59.32	425	0	0.0	832.4	59.3	0.0	0.0	24,972	17.34	25,210	17.5
Valley N 185th	8	41048	10.45	425	80	10.5	0.0	0.0	0.0	0.0	4,025	2.80	4,442	3.1
Valley N 185th	9	44008	22.51	425	340	22.5	0.0	0.0	0.0	0.0	16,975	11.79	9,569	6.6
waynita	1	17317	14.33	390	133	14.3	0.0	0.0	0.0	0.0	6,670	4.63	5,588	3.9
waynita	2	18210	43.90	390	432	43.9	0.0	0.0	0.0	0.0	21,620	15.01	17,123	11.9
waynita	3	17322	10.49	390	101	10.5	0.0	0.0	0.0	0.0	5,060	3.51	4,093	2.8
waynita	4	2089	86.24	390	359	36.4	698.8	49.8	0.0	0.0	38,899	27.01	33,634	23.4
waynita	5	17425	18.13	390	175	18.1	0.0	0.0	0.0	0.0	8,740	6.07	7,069	4.9
waynita	6	18137	36.87	390	617	36.9	0.0	0.0	0.0	0.0	30,825	21.41	14,379	10.0
waynita	7	2015	4.17	390	41	4.2	0.0	0.0	0.0	0.0	2,070	1.44	1,625	1.1
Westhill A	1	71058	18.37	1,301	610	13.8	64.5	4.6	0.0	0.0	32,441	22.53	23,905	16.6
Westhill A	2	74003	53.67	1,301	226	21.3	24.4	1.7	1900.0	30.6	42,443	29.47	69,818	48.5

City of Bothell Sewer Comprehensive Plan
Sewer Model Input (Existing Scenario)

			Inflow & Infiltration		Residential		Commercial		School					
Basin	Catchment	Input MH	Area (ac)	Rate (gpad)	Population	Area (ac)	Employees	Area (ac)	Students	Area (ac)	Flow (gpd)	Flow (gpm)	I/I (gpd)	I/I (gpm)
Westhill B	1	62091	14.91	970	129	14.9	0.0	0.0	0.0	0.0	6,440	4.47	14,466	10.0
Westhill B	2	62026	16.24	1,721	541	2.6	191.9	13.7	0.0	0.0	32,828	22.80	27,947	19.4
Westhill B	3	63039	18.03	970	127	18.0	0.0	0.0	0.0	0.0	6,325	4.39	17,492	12.1
Westhill B	4	2029	20.66	970	154	16.4	59.5	4.2	0.0	0.0	9,490	6.59	20,042	13.9
Westhill B	5	64001	1.33	970	14	1.3	0.0	0.0	0.0	0.0	690	0.48	1,294	0.9
Westhill B	6	62100	16.82	970	401	16.5	4.7	0.3	0.0	0.0	20,192	14.02	16,316	11.3
Westhill C	1	62041	27.10	655	659	20.7	89.6	6.4	0.0	0.0	35,643	24.75	17,751	12.3
Westhill C	2	62004	33.03	1,721	358	24.9	113.7	8.1	0.0	0.0	21,312	14.80	56,843	39.5
Westhill C	3	63024	7.34	1,721	74	7.3	0.0	0.0	0.0	0.0	3,680	2.56	12,637	8.8
Westhill C	4	64010	19.49	1,721	196	18.4	15.2	1.1	0.0	0.0	10,230	7.10	33,542	23.3
Westhill C	5	63017	6.52	1,721	67	6.5	0.0	0.0	0.0	0.0	3,335	2.32	11,216	7.8
Total			1931.9		22,375	1248.7	12146.0	612.9	5361.0	59.6	1,568,927	1,090	2,034,982.3	1,413.2

City of Bothell Sewer Comprehensive Plan
Sewer Model Input (Year 2022 Scenario)

			Inflow & Infiltration		Residential		Commercial		School					
Basin	Catchment	Input MH	Area (ac)	Rate (gpad)	Population	Area (ac)	Employees	Area (ac)	Students	Area (ac)	Flow (gpd)	Flow (gpm)	I/I (gpd)	I/I (gpm)
Brickyard	1	93066	3.32	1,941	39	3.3	0.0	0.0	0.0	0.0	1,955	1.36	6,444	4.5
Brickyard	2	1565	7.82	1,941	48	7.8	0.0	0.0	0.0	0.0	2,420	1.68	15,175	10.5
Brickyard	3	93030	2.88	1,941	41	2.9	0.0	0.0	0.0	0.0	2,070	1.44	5,593	3.9
Brickyard	4	93025	9.34	1,941	173	9.3	0.0	0.0	0.0	0.0	8,630	5.99	18,125	12.6
Brickyard	5	1572	7.79	1,941	66	7.8	0.0	0.0	0.0	0.0	3,305	2.30	15,116	10.5
Brickyard	6	1576	7.07	1,941	77	7.1	0.0	0.0	0.0	0.0	3,830	2.66	13,732	9.5
Brickyard	7	93034	6.30	1,941	79	6.3	0.0	0.0	0.0	0.0	3,960	2.75	12,219	8.5
Brickyard	8	93056	10.22	1,941	161	10.2	0.0	0.0	0.0	0.0	8,050	5.59	19,829	13.8
Brickyard	9	94010	22.12	1,941	5	7.9	202.9	14.2	0.0	0.0	6,316	4.39	42,938	29.8
Brickyard	10	93019	11.94	1,941	196	11.9	0.0	0.0	0.0	0.0	9,775	6.79	23,173	16.1
Brickyard	12	94023	27.97	1,941	776	28.0	0.0	0.0	0.0	0.0	38,775	26.93	54,294	37.7
Brickyard	13	16411	11.07	1,941	88	11.1	0.0	0.0	0.0	0.0	4,405	3.06	21,478	14.9
Brickyard	14	93065	2.67	1,941	2	0.1	36.1	2.5	0.0	0.0	1,198	0.83	5,192	3.6
Brickyard	15	93070	4.08	1,941	37	4.1	0.0	0.0	0.0	0.0	1,840	1.28	7,913	5.5
Brickyard	16	93074	5.44	1,941	37	5.4	0.0	0.0	0.0	0.0	1,860	1.29	10,561	7.3
Brickyard	17	2059	4.08	1,941	0	0.0	58.3	4.1	0.0	0.0	1,750	1.21	7,924	5.5
Brickyard	18	93075	6.67	1,941	0	6.7	0.0	0.0	0.0	0.0	-	-	12,948	9.0
Camden	1	53091	3.67	911	41	3.7	0.0	0.0	0.0	0.0	2,070	1.44	3,340	2.3
Camden	2	54063	13.40	911	136	13.4	0.0	0.0	0.0	0.0	6,785	4.71	12,204	8.5
Camden	3	54089	6.40	911	60	6.4	0.0	0.0	0.0	0.0	2,990	2.08	5,830	4.0
Camden	4	323001	16.39	911	122	16.4	0.0	0.0	0.0	0.0	6,095	4.23	14,931	10.4
Camden	5	54105	3.68	911	37	3.7	0.0	0.0	0.0	0.0	1,840	1.28	3,353	2.3
Camden	6	54091	7.05	911	67	7.0	0.0	0.0	0.0	0.0	3,335	2.32	6,419	4.5
Camden	7	53099	3.42	911	39	3.4	0.0	0.0	0.0	0.0	1,955	1.36	3,120	2.2
Camden	8	53096	2.98	911	32	3.0	0.0	0.0	0.0	0.0	1,610	1.12	2,716	1.9
Camden	9	323011	4.91	911	48	4.9	0.0	0.0	0.0	0.0	2,415	1.68	4,473	3.1
Camden	10	53104	19.27	911	315	19.3	0.0	0.0	0.0	0.0	15,760	10.94	17,551	12.2
Camden	11	54096	6.65	911	76	6.7	0.0	0.0	0.0	0.0	3,795	2.64	6,058	4.2
Camden	12	53082	3.16	911	37	3.2	0.0	0.0	0.0	0.0	1,840	1.28	2,881	2.0
Camden	13	53097	2.72	911	30	2.7	0.0	0.0	0.0	0.0	1,495	1.04	2,475	1.7
Camden	14	53086	3.01	911	35	3.0	0.0	0.0	0.0	0.0	1,725	1.20	2,745	1.9
Camden	15	54099	12.26	911	14	2.3	0.0	0.0	761	9.9	12,866	8.93	11,166	7.8
Camden	16	323019	3.90	911	39	3.9	0.0	0.0	0.0	0.0	1,955	1.36	3,553	2.5
Camden	17	53116	29.39	911	1,463	20.6	126.0	8.8	0.0	0.0	76,910	53.41	26,771	18.6
Cedar Park	1	82017	110.34	1,120	876	98.2	142.8	10.0	1300	2.0	68,877	47.83	123,586	85.8
Cedar Park	2	1613	14.08	1,120	93	14.1	0.0	0.0	0.0	0.0	4,670	3.24	15,772	11.0
Downtown	1	53057	5.54	1,468	42	5.5	0.0	0.0	0.0	0.0	2,105	1.46	8,137	5.7
Downtown	2	81003	11.10	1,093	153	10.3	10.8	0.8	0.0	0.0	7,953	5.52	12,130	8.4
Downtown	3	84034	6.51	1,093	53	4.5	28.7	2.0	0.0	0.0	3,507	2.44	7,116	4.9
Downtown	4	53026	6.07	1,468	130	3.3	39.7	2.8	0.0	0.0	7,681	5.33	8,913	6.2
Downtown	5	84010	5.99	1,468	0	0.0	85.6	6.0	0.0	0.0	2,569	1.78	8,801	6.1
Downtown	6	54059	3.37	1,468	37	3.4	0.0	0.0	0.0	0.0	1,840	1.28	4,941	3.4

City of Bothell Sewer Comprehensive Plan
Sewer Model Input (Year 2022 Scenario)

			Inflow & Infiltration		Residential		Commercial		School					
Basin	Catchment	Input MH	Area (ac)	Rate (gpad)	Population	Area (ac)	Employees	Area (ac)	Students	Area (ac)	Flow (gpd)	Flow (gpm)	I/I (gpd)	I/I (gpm)
Downtown	7	54061	2.47	1,468	0	0.0	35.3	2.5	0.0	0.0	1,059	0.74	3,626	2.5
Downtown	8	54062	2.17	1,468	25	2.2	0.0	0.0	0.0	0.0	1,265	0.88	3,186	2.2
Downtown	9	53087	2.77	1,468	32	2.8	0.0	0.0	0.0	0.0	1,610	1.12	4,060	2.8
Downtown	10	53089	4.13	1,468	32	4.1	0.0	0.0	0.0	0.0	1,610	1.12	6,064	4.2
Downtown	11	53059	5.65	1,468	53	5.7	0.0	0.0	0.0	0.0	2,645	1.84	8,297	5.8
Downtown	12	53074	4.01	1,468	32	4.0	0.0	0.0	0.0	0.0	1,610	1.12	5,887	4.1
Downtown	13	53063	4.92	1,468	38	1.9	40.5	2.8	0.0	0.0	3,096	2.15	7,219	5.0
Downtown	14	71028	22.55	1,468	106	6.0	204.4	14.3	0.0	0.0	11,407	7.92	33,105	23.0
Downtown	15	53048	6.66	1,468	173	6.7	0.0	0.0	0.0	0.0	8,656	6.01	9,772	6.8
Downtown	16	84090	4.64	1,093	13	1.2	49.5	3.5	0.0	0.0	2,130	1.48	5,069	3.5
Downtown	17	2098	11.62	1,093	574	6.6	71.4	5.0	0.0	0.0	30,862	21.43	12,706	8.8
Downtown	18	53036	4.43	1,468	177	3.2	17.2	1.2	0.0	0.0	9,378	6.51	6,504	4.5
Downtown	19	53006	7.10	1,468	138	7.1	0.0	0.0	0.0	0.0	6,895	4.79	10,428	7.2
Downtown	20	53067	5.00	1,468	124	4.9	2.1	0.1	0.0	0.0	6,253	4.34	7,342	5.1
Downtown	21	53003	4.08	1,468	36	4.1	0.0	0.0	0.0	0.0	1,775	1.23	5,986	4.2
Downtown	22	53068	2.12	1,468	38	2.1	0.0	0.0	0.0	0.0	1,905	1.32	3,114	2.2
Downtown	23	53018	2.34	1,468	91	2.3	0.0	0.0	0.0	0.0	4,570	3.17	3,429	2.4
Downtown	24	53047	6.07	1,468	229	6.1	0.0	0.0	0.0	0.0	11,460	7.96	8,914	6.2
Downtown	25	53072	3.35	1,468	21	3.4	0.0	0.0	0.0	0.0	1,035	0.72	4,922	3.4
Glenwood	1	54027	8.52	809	90	8.5	0.0	0.0	0.0	0.0	4,485	3.11	6,896	4.8
Glenwood	2	1508	14.13	809	120	14.1	0.0	0.0	0.0	0.0	5,980	4.15	11,431	7.9
Glenwood	3	54004	9.82	809	83	9.8	0.0	0.0	0.0	0.0	4,140	2.88	7,941	5.5
Glenwood	4	54030	3.94	809	44	3.9	0.0	0.0	0.0	0.0	2,185	1.52	3,188	2.2
Glenwood	5	312003	19.67	809	177	19.7	0.0	0.0	0.0	0.0	8,855	6.15	15,913	11.1
Glenwood	6	61016	55.02	809	543	31.1	120.4	8.4	721	7.8	42,290	29.37	44,512	30.9
Glenwood	7	61003	14.54	809	170	14.5	0.0	0.0	0.0	0.0	8,510	5.91	11,765	8.2
Glenwood	8	1610	11.79	809	63	11.8	0.0	0.0	0.0	0.0	3,125	2.17	9,539	6.6
Glenwood	9	1512	2.87	809	30	2.9	0.0	0.0	0.0	0.0	1,495	1.04	2,322	1.6
Glenwood	10	1681	44.68	809	509	44.7	0.0	0.0	0.0	0.0	25,470	17.69	36,150	25.1
Glenwood	11	54014	11.63	809	110	11.6	0.0	0.0	0.0	0.0	5,520	3.83	9,412	6.5
Glenwood	12	62077	7.74	809	91	6.2	22.1	1.5	0.0	0.0	5,188	3.60	6,260	4.3
Glenwood	13	61025	4.51	809	44	4.5	0.0	0.0	0.0	0.0	2,205	1.53	3,646	2.5
Glenwood	14	54052	20.77	809	166	18.0	38.9	2.7	0.0	0.0	9,446	6.56	16,802	11.7
Glenwood	15	1500	10.05	809	99	9.8	0.0	0.0	0.0	0.0	4,945	3.43	8,130	5.6
Morning Side	1	42057	12.16	1,301	200	12.2	0.0	0.0	0.0	0.0	10,010	6.95	15,826	11.0
Morning Side	2	42015	6.50	1,301	127	6.5	0.0	0.0	0.0	0.0	6,325	4.39	8,462	5.9
Morning Side	3	42024	5.69	1,301	90	5.7	0.0	0.0	0.0	0.0	4,485	3.11	7,403	5.1
Morning Side	4	41003	11.98	1,301	159	9.3	37.9	2.7	0.0	0.0	9,071	6.30	15,583	10.8
Morning Side	5	41050	8.60	1,301	137	8.6	0.0	0.0	0.0	0.0	6,870	4.77	11,188	7.8
Morning Side	6	41018	12.24	1,301	235	12.2	0.0	0.0	0.0	0.0	11,730	8.15	15,918	11.1
Morning Side	7	41032	8.87	1,301	163	8.9	0.0	0.0	0.0	0.0	8,165	5.67	11,542	8.0
Morning Side	8	42032	2.48	1,301	48	2.5	0.0	0.0	0.0	0.0	2,415	1.68	3,230	2.2

City of Bothell Sewer Comprehensive Plan
Sewer Model Input (Year 2022 Scenario)

			Inflow & Infiltration		Residential		Commercial		School					
Basin	Catchment	Input MH	Area (ac)	Rate (gpad)	Population	Area (ac)	Employees	Area (ac)	Students	Area (ac)	Flow (gpd)	Flow (gpm)	I/I (gpd)	I/I (gpm)
North Creek	1	51038	50.45	1,301	368	50.4	0.0	0.0	0.0	0.0	18,395	12.77	65,634	45.6
Norway Hill	1	84083	31.16	1,093	794	21.6	102.6	7.2	0.0	0.0	42,773	29.70	34,056	23.6
Norway Hill	2	84070	115.89	1,093	905	107.7	116.6	8.2	0.0	0.0	48,772	33.87	126,665	88.0
Norway Hill	3	1541	13.68	1,093	89	13.7	0.0	0.0	0.0	0.0	4,465	3.10	14,953	10.4
Pioneer Hill	1	42082	4.05	1,301	39	4.1	0.0	0.0	0.0	0.0	1,955	1.36	5,271	3.7
Pioneer Hill	2	91013	7.53	1,301	90	7.5	0.0	0.0	0.0	0.0	4,485	3.11	9,801	6.8
Pioneer Hill	3	2107	6.32	1,301	46	3.9	0.0	0.0	0.0	0.0	2,300	1.60	8,229	5.7
Pioneer Hill	4	42066	9.30	1,301	0	0.0	0.0	0.0	682	9.3	10,911	7.58	12,099	8.4
Pioneer Hill	5	41041	6.14	1,301	58	6.1	0.0	0.0	0.0	0.0	2,875	2.00	7,986	5.5
Pioneer Hill	6	1602	4.20	1,301	28	4.2	0.0	0.0	0.0	0.0	1,380	0.96	5,464	3.8
Pioneer Hill	7	42060	7.07	1,301	159	7.1	0.0	0.0	0.0	0.0	7,935	5.51	9,195	6.4
Pioneer Hill	8	42085	9.06	1,301	85	9.1	0.0	0.0	0.0	0.0	4,255	2.95	11,781	8.2
Pioneer Hill	9	2137	55.71	1,301	1,953	55.7	0.0	0.0	0.0	0.0	97,650	67.81	72,483	50.3
Pioneer Hill	10	42087	14.09	1,301	289	14.1	0.0	0.0	0.0	0.0	14,445	10.03	18,331	12.7
Pioneer Hill	11	1535	2.78	1,301	36	2.8	0.0	0.0	0.0	0.0	1,810	1.26	3,622	2.5
S UW	1	81010	22.73	1,301	513	14.5	53.7	3.8	0.0	0.0	27,275	18.94	29,565	20.5
S UW	2	1667	128.92	1,120	8	5.3	5596.8	123.7	0.0	0.0	168,319	116.89	144,394	100.3
S UW	3	81014	9.50	1,120	272	9.5	0.0	0.0	0.0	0.0	13,601	9.45	10,641	7.4
SR522 West	1	71078	40.15	7,643	297	13.5	226.1	15.8	0.0	0.0	21,607	15.01	306,900	213.1
Staples Home Dep	1	1718	31.46	1,301	0	4.8	381.6	26.7	0.0	0.0	11,448	7.95	40,936	28.4
UW Cascadia	1	52012	0.00	1,301	0	0.0	0.0	0.0	0.0	0.0	-	-	-	-
Valley N 185th	1	43001	68.25	425	0	1.2	957.2	67.0	0.0	0.0	28,716	19.94	29,004	20.1
Valley N 185th	2	44011	15.32	425	0	3.9	163.3	11.4	0.0	0.0	4,898	3.40	6,512	4.5
Valley N 185th	3	43007	38.70	425	0	0.0	552.9	38.7	0.0	0.0	16,586	11.52	16,448	11.4
Valley N 185th	4	43020	84.21	425	74	34.1	716.2	50.1	0.0	0.0	25,186	17.49	35,789	24.9
Valley N 185th	5	44006	15.23	425	0	0.0	217.6	15.2	0.0	0.0	6,528	4.53	6,473	4.5
Valley N 185th	6	44003	27.13	425	0	10.1	243.6	17.1	0.0	0.0	7,308	5.07	11,530	8.0
Valley N 185th	7	2083	62.91	425	0	3.6	847.4	59.3	0.0	0.0	25,422	17.65	26,737	18.6
Valley N 185th	8	41048	15.15	425	98	15.2	0.0	0.0	0.0	0.0	4,925	3.42	6,440	4.5
Valley N 185th	9	44008	16.93	425	94	16.9	0.0	0.0	0.0	0.0	4,700	3.26	7,194	5.0
waynita	1	17317	14.33	390	133	14.3	0.0	0.0	0.0	0.0	6,670	4.63	5,588	3.9
waynita	2	18210	49.27	390	446	49.3	0.0	0.0	0.0	0.0	22,320	15.50	19,214	13.3
waynita	3	17322	10.49	390	101	10.5	0.0	0.0	0.0	0.0	5,060	3.51	4,093	2.8
waynita	4	2089	115.03	390	530	65.2	711.4	49.8	0.0	0.0	47,827	33.21	44,860	31.2
waynita	5	17425	33.98	390	186	34.0	0.0	0.0	0.0	0.0	9,290	6.45	13,253	9.2
waynita	6	18137	47.07	390	627	47.1	0.0	0.0	0.0	0.0	31,325	21.75	18,357	12.7
waynita	7	2015	4.17	390	41	4.2	0.0	0.0	0.0	0.0	2,070	1.44	1,625	1.1
Westhill A	1	71058	21.60	1,301	612	14.7	99.2	6.9	0.0	0.0	33,580	23.32	28,097	19.5
Westhill A	2	74003	62.41	1,301	254	29.4	34.1	2.4	1903	30.6	44,181	30.68	81,197	56.4
Westhill B	1	62091	22.33	970	163	21.6	3.7	0.3	0.0	0.0	8,251	5.73	21,657	15.0
Westhill B	2	62026	20.03	1,721	542	2.7	228.8	16.0	0.0	0.0	33,987	23.60	34,478	23.9
Westhill B	3	63039	22.04	970	137	22.0	0.0	0.0	0.0	0.0	6,825	4.74	21,379	14.8

City of Bothell Sewer Comprehensive Plan
Sewer Model Input (Year 2022 Scenario)

			Inflow & Infiltration		Residential		Commercial		School					
Basin	Catchment	Input MH	Area (ac)	Rate (gpad)	Population	Area (ac)	Employees	Area (ac)	Students	Area (ac)	Flow (gpd)	Flow (gpm)	I/I (gpd)	I/I (gpm)
Westhill B	4	2029	21.74	970	156	17.5	60.6	4.2	0.0	0.0	9,622	6.68	21,090	14.6
Westhill B	5	64001	10.81	970	54	10.8	0.0	0.0	0.0	0.0	2,690	1.87	10,485	7.3
Westhill B	6	62100	19.86	970	403	18.7	16.0	1.1	0.0	0.0	20,631	14.33	19,268	13.4
Westhill C	1	62041	64.56	655	904	57.0	108.6	7.6	0.0	0.0	48,463	33.66	42,290	29.4
Westhill C	2	62004	41.19	1,721	371	29.5	167.3	11.7	0.0	0.0	23,568	16.37	70,880	49.2
Westhill C	3	63024	7.48	1,721	74	7.5	0.0	0.0	0.0	0.0	3,680	2.56	12,876	8.9
Westhill C	4	64010	25.49	1,721	220	24.4	15.4	1.1	0.0	0.0	11,438	7.94	43,868	30.5
Westhill C	5	63017	6.52	1,721	67	6.5	0.0	0.0	0.0	0.0	3,335	2.32	11,216	7.8
Total			2405		23,541	1672	12991	641	5367	60	1,652,648	1,148	2,654,224	1,843

City of Bothell Sewer Comprehensive Plan
Sewer Model Input (Year 2036 Scenario)

			Inflow & Infiltration		Residential		Commercial		School					
Basin	Catchment	Input MH	Area (ac)	Rate (gpad)	Population	Area (ac)	Employees	Area (ac)	Students	Area (ac)	Flow (gpd)	Flow (gpm)	I/I (gpd)	I/I (gpm)
Brickyard	1	93066	3.32	1,941	39	3.3	0.0	0.0	0.0	0.0	1,955	1.36	6,444	4.5
Brickyard	2	1565	8.24	1,941	65	9.1	0.0	0.0	0.0	0.0	3,270	2.27	15,993	11.1
Brickyard	3	93030	2.97	1,941	43	3.1	0.0	0.0	0.0	0.0	2,170	1.51	5,757	4.0
Brickyard	4	93025	9.34	1,941	173	9.3	0.0	0.0	0.0	0.0	8,630	5.99	18,125	12.6
Brickyard	5	1572	8.28	1,941	84	9.3	0.0	0.0	0.0	0.0	4,205	2.92	16,081	11.2
Brickyard	6	1576	7.35	1,941	87	7.9	0.0	0.0	0.0	0.0	4,330	3.01	14,259	9.9
Brickyard	7	93034	6.41	1,941	84	6.6	0.0	0.0	0.0	0.0	4,210	2.92	12,433	8.6
Brickyard	8	93056	10.22	1,941	161	10.2	0.0	0.0	0.0	0.0	8,050	5.59	19,829	13.8
Brickyard	9	94010	22.34	1,941	5	7.9	267.3	14.9	0.0	0.0	8,248	5.73	43,366	30.1
Brickyard	10	93019	11.96	1,941	197	12.0	0.0	0.0	0.0	0.0	9,825	6.82	23,208	16.1
Brickyard	12	94023	28.02	1,941	780	28.1	0.0	0.0	0.0	0.0	38,975	27.07	54,381	37.8
Brickyard	13	16411	11.26	1,941	99	11.7	0.0	0.0	0.0	0.0	4,955	3.44	21,846	15.2
Brickyard	14	93065	2.67	1,941	2	0.1	45.3	2.5	0.0	0.0	1,475	1.02	5,192	3.6
Brickyard	15	93070	4.08	1,941	37	4.1	0.0	0.0	0.0	0.0	1,840	1.28	7,913	5.5
Brickyard	16	93074	5.76	1,941	50	6.4	0.0	0.0	0.0	0.0	2,510	1.74	11,176	7.8
Brickyard	17	2059	4.93	1,941	0	0.0	120.9	6.7	0.0	0.0	3,627	2.52	9,571	6.6
Brickyard	18	93075	8.06	1,941	0	11.0	0.0	0.0	0.0	0.0	-	-	15,640	10.9
Camden	1	53091	3.67	911	41	3.7	0.0	0.0	0.0	0.0	2,070	1.44	3,340	2.3
Camden	2	54063	13.40	911	136	13.4	0.0	0.0	0.0	0.0	6,785	4.71	12,204	8.5
Camden	3	54089	6.51	911	66	6.7	0.0	0.0	0.0	0.0	3,290	2.28	5,927	4.1
Camden	4	323001	16.39	911	122	16.4	0.0	0.0	0.0	0.0	6,095	4.23	14,931	10.4
Camden	5	54105	3.68	911	37	3.7	0.0	0.0	0.0	0.0	1,840	1.28	3,353	2.3
Camden	6	54091	7.18	911	75	7.5	0.0	0.0	0.0	0.0	3,735	2.59	6,542	4.5
Camden	7	53099	3.42	911	39	3.4	0.0	0.0	0.0	0.0	1,955	1.36	3,120	2.2
Camden	8	53096	2.98	911	32	3.0	0.0	0.0	0.0	0.0	1,610	1.12	2,716	1.9
Camden	9	323011	4.91	911	48	4.9	0.0	0.0	0.0	0.0	2,415	1.68	4,473	3.1
Camden	10	53104	19.82	911	336	21.0	0.0	0.0	0.0	0.0	16,810	11.67	18,053	12.5
Camden	11	54096	6.67	911	77	6.7	0.0	0.0	0.0	0.0	3,845	2.67	6,081	4.2
Camden	12	53082	3.16	911	37	3.2	0.0	0.0	0.0	0.0	1,840	1.28	2,881	2.0
Camden	13	53097	2.72	911	30	2.7	0.0	0.0	0.0	0.0	1,495	1.04	2,475	1.7
Camden	14	53086	3.01	911	35	3.0	0.0	0.0	0.0	0.0	1,725	1.20	2,745	1.9
Camden	15	54099	12.26	911	14	2.3	0.0	0.0	761	9.9	12,866	8.93	11,166	7.8
Camden	16	323019	3.90	911	39	3.9	0.0	0.0	0.0	0.0	1,955	1.36	3,553	2.5
Camden	17	53116	30.65	911	1,495	23.5	176.3	9.8	0.0	0.0	80,018	55.57	27,926	19.4
Cedar Park	1	82017	120.59	1,120	1,214	130.3	179.4	10.0	1300	2.0	86,875	60.33	135,059	93.8
Cedar Park	2	1613	14.37	1,120	105	15.0	0.0	0.0	0.0	0.0	5,270	3.66	16,097	11.2
Downtown	1	53057	5.69	1,468	49	6.0	0.0	0.0	0.0	0.0	2,455	1.70	8,347	5.8
Downtown	2	81003	11.17	1,093	154	10.6	13.5	0.8	0.0	0.0	8,086	5.62	12,214	8.5
Downtown	3	84034	6.55	1,093	53	4.5	38.2	2.1	0.0	0.0	3,792	2.63	7,162	5.0
Downtown	4	53026	6.39	1,468	160	4.1	53.7	3.0	0.0	0.0	9,601	6.67	9,375	6.5
Downtown	5	84010	6.15	1,468	0	0.0	116.2	6.5	0.0	0.0	3,487	2.42	9,026	6.3
Downtown	6	54059	3.37	1,468	37	3.4	0.0	0.0	0.0	0.0	1,840	1.28	4,941	3.4
Downtown	7	54061	2.47	1,468	0	0.0	44.3	2.5	0.0	0.0	1,330	0.92	3,626	2.5

City of Bothell Sewer Comprehensive Plan
Sewer Model Input (Year 2036 Scenario)

			Inflow & Infiltration		Residential		Commercial		School					
Basin	Catchment	Input MH	Area (ac)	Rate (gpad)	Population	Area (ac)	Employees	Area (ac)	Students	Area (ac)	Flow (gpd)	Flow (gpm)	I/I (gpd)	I/I (gpm)
Downtown	8	54062	2.17	1,468	25	2.2	0.0	0.0	0.0	0.0	1,265	0.88	3,186	2.2
Downtown	9	53087	2.77	1,468	32	2.8	0.0	0.0	0.0	0.0	1,610	1.12	4,060	2.8
Downtown	10	53089	4.13	1,468	32	4.1	0.0	0.0	0.0	0.0	1,610	1.12	6,064	4.2
Downtown	11	53059	5.65	1,468	53	5.7	0.0	0.0	0.0	0.0	2,645	1.84	8,297	5.8
Downtown	12	53074	4.01	1,468	32	4.0	0.0	0.0	0.0	0.0	1,610	1.12	5,887	4.1
Downtown	13	53063	5.04	1,468	50	2.2	52.3	2.9	0.0	0.0	4,049	2.81	7,396	5.1
Downtown	14	71028	23.98	1,468	190	8.0	287.5	16.0	0.0	0.0	18,100	12.57	35,206	24.4
Downtown	15	53048	6.66	1,468	173	6.7	0.0	0.0	0.0	0.0	8,656	6.01	9,772	6.8
Downtown	16	84090	4.80	1,093	33	1.7	62.2	3.5	0.0	0.0	3,511	2.44	5,244	3.6
Downtown	17	2098	11.78	1,093	580	6.8	96.3	5.4	0.0	0.0	31,908	22.16	12,879	8.9
Downtown	18	53036	4.44	1,468	178	3.3	21.6	1.2	0.0	0.0	9,560	6.64	6,519	4.5
Downtown	19	53006	7.15	1,468	143	7.3	0.0	0.0	0.0	0.0	7,145	4.96	10,501	7.3
Downtown	20	53067	5.06	1,468	125	4.9	4.3	0.2	0.0	0.0	6,370	4.42	7,422	5.2
Downtown	21	53003	4.18	1,468	42	4.4	0.0	0.0	0.0	0.0	2,075	1.44	6,137	4.3
Downtown	22	53068	2.12	1,468	38	2.1	0.0	0.0	0.0	0.0	1,905	1.32	3,114	2.2
Downtown	23	53018	2.37	1,468	95	2.4	0.0	0.0	0.0	0.0	4,770	3.31	3,482	2.4
Downtown	24	53047	6.10	1,468	230	6.1	0.0	0.0	0.0	0.0	11,510	7.99	8,950	6.2
Downtown	25	53072	3.44	1,468	26	3.6	0.0	0.0	0.0	0.0	1,285	0.89	5,047	3.5
Glenwood	1	54027	8.59	809	94	8.7	0.0	0.0	0.0	0.0	4,685	3.25	6,949	4.8
Glenwood	2	1508	14.13	809	120	14.1	0.0	0.0	0.0	0.0	5,980	4.15	11,431	7.9
Glenwood	3	54004	9.82	809	83	9.8	0.0	0.0	0.0	0.0	4,140	2.88	7,941	5.5
Glenwood	4	54030	3.94	809	44	3.9	0.0	0.0	0.0	0.0	2,185	1.52	3,188	2.2
Glenwood	5	312003	19.67	809	177	19.7	0.0	0.0	0.0	0.0	8,855	6.15	15,913	11.1
Glenwood	6	61016	55.91	809	594	33.9	151.3	8.4	721	7.8	45,767	31.78	45,228	31.4
Glenwood	7	61003	14.54	809	170	14.5	0.0	0.0	0.0	0.0	8,510	5.91	11,765	8.2
Glenwood	8	1610	12.66	809	96	14.5	0.0	0.0	0.0	0.0	4,775	3.32	10,243	7.1
Glenwood	9	1512	2.87	809	30	2.9	0.0	0.0	0.0	0.0	1,495	1.04	2,322	1.6
Glenwood	10	1681	46.44	809	629	50.2	0.0	0.0	0.0	0.0	31,470	21.85	37,573	26.1
Glenwood	11	54014	11.66	809	111	11.7	0.0	0.0	0.0	0.0	5,570	3.87	9,432	6.5
Glenwood	12	62077	7.82	809	91	6.2	32.4	1.8	0.0	0.0	5,498	3.82	6,328	4.4
Glenwood	13	61025	4.72	809	55	5.2	0.0	0.0	0.0	0.0	2,755	1.91	3,817	2.7
Glenwood	14	54052	20.92	809	174	18.5	48.8	2.7	0.0	0.0	10,145	7.04	16,928	11.8
Glenwood	15	1500	10.05	809	99	9.8	0.0	0.0	0.0	0.0	4,945	3.43	8,130	5.6
Morning Side	1	42057	12.57	1,301	217	13.4	0.0	0.0	0.0	0.0	10,860	7.54	16,355	11.4
Morning Side	2	42015	6.50	1,301	127	6.5	0.0	0.0	0.0	0.0	6,325	4.39	8,462	5.9
Morning Side	3	42024	5.69	1,301	90	5.7	0.0	0.0	0.0	0.0	4,485	3.11	7,403	5.1
Morning Side	4	41003	12.15	1,301	160	9.9	47.6	2.7	0.0	0.0	9,412	6.54	15,806	11.0
Morning Side	5	41050	8.83	1,301	147	9.3	0.0	0.0	0.0	0.0	7,370	5.12	11,489	8.0
Morning Side	6	41018	12.24	1,301	235	12.2	0.0	0.0	0.0	0.0	11,730	8.15	15,918	11.1
Morning Side	7	41032	8.87	1,301	163	8.9	0.0	0.0	0.0	0.0	8,165	5.67	11,542	8.0
Morning Side	8	42032	2.48	1,301	48	2.5	0.0	0.0	0.0	0.0	2,415	1.68	3,230	2.2
North Creek	1	51038	55.80	1,301	594	67.2	0.0	0.0	0.0	0.0	29,695	20.62	72,602	50.4
Norway Hill	1	84083	32.55	1,093	853	25.7	128.9	7.2	0.0	0.0	46,513	32.30	35,573	24.7

City of Bothell Sewer Comprehensive Plan
Sewer Model Input (Year 2036 Scenario)

			Inflow & Infiltration		Residential		Commercial		School					
Basin	Catchment	Input MH	Area (ac)	Rate (gpad)	Population	Area (ac)	Employees	Area (ac)	Students	Area (ac)	Flow (gpd)	Flow (gpm)	I/I (gpd)	I/I (gpm)
Norway Hill	2	84070	129.91	1,093	1,112	151.6	146.5	8.2	0.0	0.0	59,969	41.65	141,993	98.6
Norway Hill	3	1541	16.47	1,093	278	22.4	0.0	0.0	0.0	0.0	13,915	9.66	18,005	12.5
Pioneer Hill	1	42082	4.05	1,301	39	4.1	0.0	0.0	0.0	0.0	1,955	1.36	5,271	3.7
Pioneer Hill	2	91013	7.53	1,301	90	7.5	0.0	0.0	0.0	0.0	4,485	3.11	9,801	6.8
Pioneer Hill	3	2107	6.85	1,301	47	3.9	0.0	0.0	0.0	0.0	2,350	1.63	8,911	6.2
Pioneer Hill	4	42066	9.30	1,301	0	0.0	0.0	0.0	894	9.3	14,304	9.93	12,099	8.4
Pioneer Hill	5	41041	6.14	1,301	58	6.1	0.0	0.0	0.0	0.0	2,875	2.00	7,986	5.5
Pioneer Hill	6	1602	4.22	1,301	29	4.3	0.0	0.0	0.0	0.0	1,430	0.99	5,488	3.8
Pioneer Hill	7	42060	7.07	1,301	159	7.1	0.0	0.0	0.0	0.0	7,935	5.51	9,195	6.4
Pioneer Hill	8	42085	9.06	1,301	85	9.1	0.0	0.0	0.0	0.0	4,255	2.95	11,781	8.2
Pioneer Hill	9	2137	55.71	1,301	1,953	55.7	0.0	0.0	0.0	0.0	97,650	67.81	72,483	50.3
Pioneer Hill	10	42087	14.09	1,301	289	14.1	0.0	0.0	0.0	0.0	14,445	10.03	18,331	12.7
Pioneer Hill	11	1535	2.88	1,301	44	3.1	0.0	0.0	0.0	0.0	2,210	1.53	3,750	2.6
S UW	1	81010	24.17	1,301	533	15.9	72.1	4.0	0.0	0.0	28,827	20.02	31,445	21.8
S UW	2	1667	129.89	1,120	28	8.3	5596.8	123.7	0.0	0.0	169,319	117.58	145,475	101.0
S UW	3	81014	9.50	1,120	272	9.5	0.0	0.0	0.0	0.0	13,601	9.45	10,641	7.4
SR522 West	1	71078	45.03	7,643	392	19.6	327.3	18.2	0.0	0.0	29,394	20.41	344,132	239.0
Staples Home Dep	1	1718	32.45	1,301	0	7.8	479.5	26.7	0.0	0.0	14,384	9.99	42,221	29.3
UW Cascadia	1	52012	0.00	1,301	0	0.0	0.0	0.0	0.0	0.0	-	-	-	-
Valley N 185th	1	43001	68.50	425	0	2.1	1202.7	67.0	0.0	0.0	36,081	25.06	29,114	20.2
Valley N 185th	2	44011	16.13	425	0	6.4	205.1	11.4	0.0	0.0	6,154	4.27	6,856	4.8
Valley N 185th	3	43007	38.70	425	0	0.0	694.7	38.7	0.0	0.0	20,840	14.47	16,448	11.4
Valley N 185th	4	43020	91.30	425	225	56.2	899.9	50.1	0.0	0.0	38,246	26.56	38,801	26.9
Valley N 185th	5	44006	15.23	425	0	0.0	273.4	15.2	0.0	0.0	8,202	5.70	6,473	4.5
Valley N 185th	6	44003	27.13	425	0	10.1	306.1	17.1	0.0	0.0	9,182	6.38	11,530	8.0
Valley N 185th	7	2083	63.66	425	0	5.9	1064.7	59.3	0.0	0.0	31,942	22.18	27,054	18.8
Valley N 185th	8	41048	16.13	425	141	18.2	0.0	0.0	0.0	0.0	7,025	4.88	6,855	4.8
Valley N 185th	9	44008	20.45	425	284	27.9	0.0	0.0	0.0	0.0	14,200	9.86	8,690	6.0
waynita	1	17317	14.33	390	133	14.3	0.0	0.0	0.0	0.0	6,670	4.63	5,588	3.9
waynita	2	18210	50.38	390	492	52.8	0.0	0.0	0.0	0.0	24,620	17.10	19,649	13.6
waynita	3	17322	10.49	390	101	10.5	0.0	0.0	0.0	0.0	5,060	3.51	4,093	2.8
waynita	4	2089	121.01	390	886	83.9	893.9	49.8	0.0	0.0	71,101	49.38	47,195	32.8
waynita	5	17425	37.28	390	229	44.3	0.0	0.0	0.0	0.0	11,440	7.94	14,539	10.1
waynita	6	18137	49.19	390	661	53.7	0.0	0.0	0.0	0.0	33,025	22.93	19,184	13.3
waynita	7	2015	4.17	390	41	4.2	0.0	0.0	0.0	0.0	2,070	1.44	1,625	1.1
Westhill A	1	71058	22.17	1,301	621	15.2	146.5	8.2	0.0	0.0	35,451	24.62	28,843	20.0
Westhill A	2	74003	64.23	1,301	343	34.7	50.3	2.8	2507	30.6	58,781	40.82	83,563	58.0
Westhill B	1	62091	23.87	970	253	25.9	7.6	0.4	0.0	0.0	12,869	8.94	23,152	16.1
Westhill B	2	62026	20.82	1,721	546	2.8	314.9	17.5	0.0	0.0	36,768	25.53	35,836	24.9
Westhill B	3	63039	22.87	970	175	24.6	0.0	0.0	0.0	0.0	8,725	6.06	22,187	15.4
Westhill B	4	2029	21.97	970	164	18.2	76.1	4.2	0.0	0.0	10,488	7.28	21,308	14.8
Westhill B	5	64001	12.78	970	137	17.0	0.0	0.0	0.0	0.0	6,840	4.75	12,396	8.6
Westhill B	6	62100	20.50	970	428	20.2	29.3	1.6	0.0	0.0	22,279	15.47	19,882	13.8

City of Bothell Sewer Comprehensive Plan
Sewer Model Input (Year 2036 Scenario)

			Inflow & Infiltration		Residential		Commercial		School					
Basin	Catchment	Input MH	Area (ac)	Rate (gpad)	Population	Area (ac)	Employees	Area (ac)	Students	Area (ac)	Flow (gpd)	Flow (gpm)	I/I (gpd)	I/I (gpm)
Westhill C	1	62041	72.35	655	1,409	80.5	150.7	8.4	0.0	0.0	74,975	52.07	47,392	32.9
Westhill C	2	62004	42.88	1,721	410	32.4	252.2	14.0	0.0	0.0	28,066	19.49	73,798	51.2
Westhill C	3	63024	7.51	1,721	76	7.6	0.0	0.0	0.0	0.0	3,780	2.63	12,926	9.0
Westhill C	4	64010	26.74	1,721	292	28.3	19.4	1.1	0.0	0.0	15,157	10.53	46,015	32.0
Westhill C	5	63017	6.52	1,721	67	6.5	0.0	0.0	0.0	0.0	3,335	2.32	11,216	7.8
Total			2507		27,130	1961	15198	659	6183	60	1,911,363	1,327	2,784,496	1,934

City of Bothell Sewer Comprehensive Plan
Sewer Model Input (Buildout Scenario)

			Inflow & Infiltration		Residential		Commercial		School					
Basin	Catchment	Input MH	Area (ac)	Rate (gpad)	Resid Population	Area (ac)	Employees	Area (ac)	Students	Area (ac)	Flow (gpd)	Flow (gpm)	I/I (gpd)	I/I (gpm)
Brickyard	1	93066	3.32	1,941	39	3.3	0.0	0.0	0.0	0.0	1,955	1.36	6,444	4.5
Brickyard	2	1565	9.14	1,941	109	9.1	0.0	0.0	0.0	0.0	5,470	3.80	17,732	12.3
Brickyard	3	93030	3.15	1,941	53	3.1	0.0	0.0	0.0	0.0	2,670	1.85	6,106	4.2
Brickyard	4	93025	9.34	1,941	173	9.3	0.0	0.0	0.0	0.0	8,630	5.99	18,125	12.6
Brickyard	5	1572	9.34	1,941	138	9.3	0.0	0.0	0.0	0.0	6,905	4.80	18,133	12.6
Brickyard	6	1576	7.92	1,941	116	7.9	0.0	0.0	0.0	0.0	5,780	4.01	15,380	10.7
Brickyard	7	93034	6.64	1,941	95	6.6	0.0	0.0	0.0	0.0	4,760	3.31	12,889	9.0
Brickyard	8	93056	10.22	1,941	161	10.2	0.0	0.0	0.0	0.0	8,050	5.59	19,829	13.8
Brickyard	9	94010	22.81	1,941	5	7.9	333.6	14.9	0.0	0.0	10,238	7.11	44,277	30.7
Brickyard	10	93019	12.00	1,941	199	12.0	0.0	0.0	0.0	0.0	9,925	6.89	23,285	16.2
Brickyard	12	94023	28.11	1,941	792	28.1	0.0	0.0	0.0	0.0	39,575	27.48	54,568	37.9
Brickyard	13	16411	11.66	1,941	130	11.7	0.0	0.0	0.0	0.0	6,505	4.52	22,628	15.7
Brickyard	14	93065	2.67	1,941	2	0.1	56.6	2.5	0.0	0.0	1,813	1.26	5,192	3.6
Brickyard	15	93070	4.08	1,941	37	4.1	0.0	0.0	0.0	0.0	1,840	1.28	7,913	5.5
Brickyard	16	93074	6.43	1,941	82	6.4	0.0	0.0	0.0	0.0	4,110	2.85	12,486	8.7
Brickyard	17	2059	6.74	1,941	0	0.0	150.9	6.7	0.0	0.0	4,527	3.14	13,075	9.1
Brickyard	18	93075	11.01	1,941	0	11.0	0.0	0.0	0.0	0.0	-	-	21,366	14.8
Camden	1	53091	3.67	1,100	41	3.7	0.0	0.0	0.0	0.0	2,070	1.44	4,033	2.8
Camden	2	54063	13.40	1,100	136	13.4	0.0	0.0	0.0	0.0	6,785	4.71	14,736	10.2
Camden	3	54089	6.73	1,100	82	6.7	0.0	0.0	0.0	0.0	4,090	2.84	7,407	5.1
Camden	4	323001	16.39	1,100	122	16.4	0.0	0.0	0.0	0.0	6,095	4.23	18,029	12.5
Camden	5	54105	3.68	1,100	37	3.7	0.0	0.0	0.0	0.0	1,840	1.28	4,049	2.8
Camden	6	54091	7.47	1,100	95	7.5	0.0	0.0	0.0	0.0	4,735	3.29	8,215	5.7
Camden	7	53099	3.42	1,100	39	3.4	0.0	0.0	0.0	0.0	1,955	1.36	3,767	2.6
Camden	8	53096	2.98	1,100	32	3.0	0.0	0.0	0.0	0.0	1,610	1.12	3,279	2.3
Camden	9	323011	4.91	1,100	48	4.9	0.0	0.0	0.0	0.0	2,415	1.68	5,401	3.8
Camden	10	53104	20.99	1,100	395	21.0	0.0	0.0	0.0	0.0	19,760	13.72	23,087	16.0
Camden	11	54096	6.73	1,100	81	6.7	0.0	0.0	0.0	0.0	4,045	2.81	7,399	5.1
Camden	12	53082	3.16	1,100	37	3.2	0.0	0.0	0.0	0.0	1,840	1.28	3,478	2.4
Camden	13	53097	2.72	1,100	30	2.7	0.0	0.0	0.0	0.0	1,495	1.04	2,988	2.1
Camden	14	53086	3.01	1,100	35	3.0	0.0	0.0	0.0	0.0	1,725	1.20	3,315	2.3
Camden	15	54099	12.26	1,100	14	2.3	0.0	0.0	1234	9.9	20,433	14.19	13,483	9.4
Camden	16	323019	3.90	1,100	39	3.9	0.0	0.0	0.0	0.0	1,955	1.36	4,290	3.0
Camden	17	53116	33.35	1,100	1,578	23.5	220.0	9.8	0.0	0.0	85,480	59.36	36,688	25.5
Cedar Park	1	82017	142.38	1,120	2,046	130.3	223.9	10.0	1395	2.0	131,334	91.20	159,463	110.7
Cedar Park	2	1613	14.99	1,120	134	15.0	0.0	0.0	0.0	0.0	6,720	4.67	16,787	11.7
Downtown	1	53057	5.99	1,468	69	6.0	0.0	0.0	0.0	0.0	3,455	2.40	8,795	6.1
Downtown	2	81003	11.34	1,100	158	10.6	16.9	0.8	0.0	0.0	8,387	5.82	12,471	8.7
Downtown	3	84034	6.64	1,100	53	4.5	47.7	2.1	0.0	0.0	4,077	2.83	7,307	5.1
Downtown	4	53026	7.06	1,468	241	4.1	67.0	3.0	0.0	0.0	14,051	9.76	10,357	7.2
Downtown	5	84010	6.47	1,468	0	0.0	145.1	6.5	0.0	0.0	4,352	3.02	9,505	6.6
Downtown	6	54059	3.37	1,468	37	3.4	0.0	0.0	0.0	0.0	1,840	1.28	4,941	3.4
Downtown	7	54061	2.47	1,468	0	0.0	55.3	2.5	0.0	0.0	1,660	1.15	3,626	2.5
Downtown	8	54062	2.17	1,468	25	2.2	0.0	0.0	0.0	0.0	1,265	0.88	3,186	2.2
Downtown	9	53087	2.77	1,468	32	2.8	0.0	0.0	0.0	0.0	1,610	1.12	4,060	2.8
Downtown	10	53089	4.13	1,468	32	4.1	0.0	0.0	0.0	0.0	1,610	1.12	6,064	4.2

City of Bothell Sewer Comprehensive Plan
Sewer Model Input (Buildout Scenario)

			Inflow & Infiltration		Residential		Commercial		School					
Basin	Catchment	Input MH	Area (ac)	Rate (gpad)	Resid Population	Area (ac)	Employees	Area (ac)	Students	Area (ac)	Flow (gpd)	Flow (gpm)	I/I (gpd)	I/I (gpm)
Downtown	11	53059	5.65	1,468	53	5.7	0.0	0.0	0.0	0.0	2,645	1.84	8,297	5.8
Downtown	12	53074	4.01	1,468	32	4.0	0.0	0.0	0.0	0.0	1,610	1.12	5,887	4.1
Downtown	13	53063	5.29	1,468	81	2.2	65.3	2.9	0.0	0.0	5,988	4.16	7,773	5.4
Downtown	14	71028	27.03	1,468	397	8.0	358.8	16.0	0.0	0.0	30,590	21.24	39,675	27.6
Downtown	15	53048	6.66	1,468	173	6.7	0.0	0.0	0.0	0.0	8,656	6.01	9,772	6.8
Downtown	16	84090	5.14	1,100	85	1.7	77.6	3.5	0.0	0.0	6,574	4.57	5,653	3.9
Downtown	17	2098	12.12	1,100	593	6.8	120.2	5.4	0.0	0.0	33,275	23.11	13,332	9.3
Downtown	18	53036	4.46	1,468	182	3.3	27.0	1.2	0.0	0.0	9,921	6.89	6,552	4.5
Downtown	19	53006	7.26	1,468	154	7.3	0.0	0.0	0.0	0.0	7,695	5.34	10,656	7.4
Downtown	20	53067	5.17	1,468	128	4.9	5.4	0.2	0.0	0.0	6,552	4.55	7,594	5.3
Downtown	21	53003	4.40	1,468	57	4.4	0.0	0.0	0.0	0.0	2,825	1.96	6,460	4.5
Downtown	22	53068	2.12	1,468	38	2.1	0.0	0.0	0.0	0.0	1,905	1.32	3,114	2.2
Downtown	23	53018	2.45	1,468	104	2.4	0.0	0.0	0.0	0.0	5,220	3.63	3,595	2.5
Downtown	24	53047	6.15	1,468	234	6.1	0.0	0.0	0.0	0.0	11,710	8.13	9,027	6.3
Downtown	25	53072	3.62	1,468	38	3.6	0.0	0.0	0.0	0.0	1,885	1.31	5,313	3.7
Glenwood	1	54027	8.73	1,100	103	8.7	0.0	0.0	0.0	0.0	5,135	3.57	9,602	6.7
Glenwood	2	1508	14.13	1,100	120	14.1	0.0	0.0	0.0	0.0	5,980	4.15	15,543	10.8
Glenwood	3	54004	9.82	1,100	83	9.8	0.0	0.0	0.0	0.0	4,140	2.88	10,798	7.5
Glenwood	4	54030	3.94	1,100	44	3.9	0.0	0.0	0.0	0.0	2,185	1.52	4,335	3.0
Glenwood	5	312003	19.67	1,100	177	19.7	0.0	0.0	0.0	0.0	8,855	6.15	21,637	15.0
Glenwood	6	61016	57.79	1,100	717	33.9	188.8	8.4	1090	7.8	58,950	40.94	63,569	44.1
Glenwood	7	61003	14.54	1,100	170	14.5	0.0	0.0	0.0	0.0	8,510	5.91	15,997	11.1
Glenwood	8	1610	14.51	1,100	190	14.5	0.0	0.0	0.0	0.0	9,475	6.58	15,965	11.1
Glenwood	9	1512	2.87	1,100	30	2.9	0.0	0.0	0.0	0.0	1,495	1.04	3,157	2.2
Glenwood	10	1681	50.18	1,100	924	50.2	0.0	0.0	0.0	0.0	46,220	32.10	55,202	38.3
Glenwood	11	54014	11.71	1,100	115	11.7	0.0	0.0	0.0	0.0	5,770	4.01	12,882	8.9
Glenwood	12	62077	8.00	1,100	91	6.2	40.5	1.8	0.0	0.0	5,740	3.99	8,799	6.1
Glenwood	13	61025	5.17	1,100	84	5.2	0.0	0.0	0.0	0.0	4,205	2.92	5,683	3.9
Glenwood	14	54052	21.26	1,100	198	18.5	60.9	2.7	0.0	0.0	11,708	8.13	23,383	16.2
Glenwood	15	1500	10.05	1,100	99	9.8	0.0	0.0	0.0	0.0	4,945	3.43	11,055	7.7
Morning Side	1	42057	13.44	1,301	259	13.4	0.0	0.0	0.0	0.0	12,960	9.00	17,481	12.1
Morning Side	2	42015	6.50	1,301	127	6.5	0.0	0.0	0.0	0.0	6,325	4.39	8,462	5.9
Morning Side	3	42024	5.69	1,301	90	5.7	0.0	0.0	0.0	0.0	4,485	3.11	7,403	5.1
Morning Side	4	41003	12.51	1,301	181	9.9	59.4	2.7	0.0	0.0	10,816	7.51	16,281	11.3
Morning Side	5	41050	9.32	1,301	171	9.3	0.0	0.0	0.0	0.0	8,570	5.95	12,131	8.4
Morning Side	6	41018	12.24	1,301	235	12.2	0.0	0.0	0.0	0.0	11,730	8.15	15,918	11.1
Morning Side	7	41032	8.87	1,301	163	8.9	0.0	0.0	0.0	0.0	8,165	5.67	11,542	8.0
Morning Side	8	42032	2.48	1,301	48	2.5	0.0	0.0	0.0	0.0	2,415	1.68	3,230	2.2
North Creek	1	51038	67.20	1,301	1,136	67.2	0.0	0.0	0.0	0.0	56,795	39.44	87,423	60.7
Norway Hill	1	84083	35.50	1,100	1,001	25.7	160.9	7.2	0.0	0.0	54,872	38.11	39,048	27.1
Norway Hill	2	84070	159.74	1,100	1,658	151.6	182.8	8.2	0.0	0.0	88,360	61.36	175,714	122.0
Norway Hill	3	1541	22.41	1,100	735	22.4	0.0	0.0	0.0	0.0	36,765	25.53	24,654	17.1
Pioneer Hill	1	42082	4.05	1,301	39	4.1	0.0	0.0	0.0	0.0	1,955	1.36	5,271	3.7
Pioneer Hill	2	91013	7.53	1,301	90	7.5	0.0	0.0	0.0	0.0	4,485	3.11	9,801	6.8
Pioneer Hill	3	2107	7.97	1,301	49	3.9	0.0	0.0	0.0	0.0	2,450	1.70	10,363	7.2
Pioneer Hill	4	42066	9.30	1,301	0	0.0	0.0	0.0	1125	9.3	17,998	12.50	12,099	8.4

City of Bothell Sewer Comprehensive Plan
Sewer Model Input (Buildout Scenario)

			Inflow & Infiltration		Residential		Commercial		School					
Basin	Catchment	Input MH	Area (ac)	Rate (gpad)	Resid Population	Area (ac)	Employees	Area (ac)	Students	Area (ac)	Flow (gpd)	Flow (gpm)	I/I (gpd)	I/I (gpm)
Pioneer Hill	5	41041	6.14	1,301	58	6.1	0.0	0.0	0.0	0.0	2,875	2.00	7,986	5.5
Pioneer Hill	6	1602	4.26	1,301	31	4.3	0.0	0.0	0.0	0.0	1,530	1.06	5,540	3.8
Pioneer Hill	7	42060	7.07	1,301	159	7.1	0.0	0.0	0.0	0.0	7,935	5.51	9,195	6.4
Pioneer Hill	8	42085	9.06	1,301	85	9.1	0.0	0.0	0.0	0.0	4,255	2.95	11,781	8.2
Pioneer Hill	9	2137	55.71	1,301	1,953	55.7	0.0	0.0	0.0	0.0	97,650	67.81	72,483	50.3
Pioneer Hill	10	42087	14.09	1,301	289	14.1	0.0	0.0	0.0	0.0	14,445	10.03	18,331	12.7
Pioneer Hill	11	1535	3.09	1,301	64	3.1	0.0	0.0	0.0	0.0	3,210	2.23	4,023	2.8
S UW	1	81010	27.24	1,301	581	15.9	90.0	4.0	0.0	0.0	31,764	22.06	35,441	24.6
S UW	2	1667	131.94	1,120	84	8.3	8817.6	123.7	0.0	0.0	268,743	186.63	147,774	102.6
S UW	3	81014	9.50	1,120	272	9.5	0.0	0.0	0.0	0.0	13,601	9.45	10,641	7.4
SR522 West	1	71078	55.39	7,643	629	19.6	408.5	18.2	0.0	0.0	43,680	30.33	423,325	294.0
Staples Home Dep	1	1718	34.56	1,301	0	7.8	598.4	26.7	0.0	0.0	17,953	12.47	44,956	31.2
UW Cascadia	1	52012	0.00	1,301	0	0.0	0.0	0.0	0.0	0.0	-	-	-	-
Valley N 185th	1	43001	69.05	1,100	0	2.1	1501.1	67.0	0.0	0.0	45,033	31.27	75,959	52.7
Valley N 185th	2	44011	17.85	1,100	0	6.4	256.0	11.4	0.0	0.0	7,681	5.33	19,638	13.6
Valley N 185th	3	43007	38.70	1,100	0	0.0	867.0	38.7	0.0	0.0	26,010	18.06	42,570	29.6
Valley N 185th	4	43020	106.37	1,100	589	56.2	1123.1	50.1	0.0	0.0	63,144	43.85	117,003	81.3
Valley N 185th	5	44006	15.23	1,100	0	0.0	341.2	15.2	0.0	0.0	10,237	7.11	16,755	11.6
Valley N 185th	6	44003	27.13	1,100	0	10.1	382.0	17.1	0.0	0.0	11,460	7.96	29,841	20.7
Valley N 185th	7	2083	65.25	1,100	0	5.9	1328.9	59.3	0.0	0.0	39,868	27.69	71,771	49.8
Valley N 185th	8	41048	18.21	1,100	240	18.2	0.0	0.0	0.0	0.0	11,975	8.32	20,030	13.9
Valley N 185th	9	44008	27.93	1,100	740	27.9	0.0	0.0	0.0	0.0	37,000	25.69	30,726	21.3
waynita	1	17317	14.33	1,100	133	14.3	0.0	0.0	0.0	0.0	6,670	4.63	15,761	10.9
waynita	2	18210	52.75	1,100	607	52.8	0.0	0.0	0.0	0.0	30,370	21.09	58,028	40.3
waynita	3	17322	10.49	1,100	101	10.5	0.0	0.0	0.0	0.0	5,060	3.51	11,544	8.0
waynita	4	2089	133.74	1,100	1,744	83.9	1115.6	49.8	0.0	0.0	120,654	83.79	147,116	102.2
waynita	5	17425	44.29	1,100	354	44.3	0.0	0.0	0.0	0.0	17,690	12.28	48,720	33.8
waynita	6	18137	53.70	1,100	752	53.7	0.0	0.0	0.0	0.0	37,575	26.09	59,070	41.0
waynita	7	2015	4.17	1,100	41	4.2	0.0	0.0	0.0	0.0	2,070	1.44	4,583	3.2
Westhill A	1	71058	23.39	1,301	648	15.2	182.9	8.2	0.0	0.0	37,891	26.31	30,431	21.1
Westhill A	2	74003	68.10	1,301	565	34.7	62.8	2.8	3362	30.6	83,933	58.29	88,595	61.5
Westhill B	1	62091	27.15	1,100	479	25.9	9.5	0.4	0.0	0.0	24,226	16.82	29,860	20.7
Westhill B	2	62026	22.50	1,721	554	2.8	393.0	17.5	0.0	0.0	39,512	27.44	38,724	26.9
Westhill B	3	63039	24.64	1,100	268	24.6	0.0	0.0	0.0	0.0	13,375	9.29	27,109	18.8
Westhill B	4	2029	22.44	1,100	190	18.2	95.0	4.2	0.0	0.0	12,355	8.58	24,688	17.1
Westhill B	5	64001	16.97	1,100	336	17.0	0.0	0.0	0.0	0.0	16,790	11.66	18,666	13.0
Westhill B	6	62100	21.84	1,100	496	20.2	36.6	1.6	0.0	0.0	25,897	17.98	24,027	16.7
Westhill C	1	62041	88.92	1,100	2,624	80.5	188.1	8.4	0.0	0.0	136,847	95.03	97,815	67.9
Westhill C	2	62004	46.49	1,721	506	32.4	314.8	14.0	0.0	0.0	34,743	24.13	80,006	55.6
Westhill C	3	63024	7.57	1,721	80	7.6	0.0	0.0	0.0	0.0	3,980	2.76	13,032	9.0
Westhill C	4	64010	29.39	1,721	468	28.3	24.2	1.1	0.0	0.0	24,101	16.74	50,582	35.1
Westhill C	5	63017	6.52	1,721	67	6.5	0.0	0.0	0.0	0.0	3,335	2.32	11,216	7.8
Total			2725		36,055	1961	20801	659	8206	60	2,558,072	1,776	3,702,105	2,571

Bothell Sewer Comprehensive Plan
Sewer Model Results (Buildout Scenario)

Pipe ID	Diameter (in.)	Upstream MH	From Invert (ft)	To Invert (ft)	Length (ft)	Slope	Max Flow (gpm)	Capacity (gpm)	Max q/Q	Max Velocity (fps)	Upstream Max. Surcharge (ft)
1499TO312015	8	1499	260.61	259.41	211.339	0.006	4	410	0.01	0.8	-0.62
1500TO312015	8	1500	259.74	259.41	276.183	0.001	32	188	0.17	0.9	-0.482
1501TO1500	8	1501	264.48	259.84	239.281	0.019	18	757	0.02	2.0	-0.596
1502TO1501	8	1502	318.94	264.58	393.587	0.138	18	2,021	0.01	4.0	-0.622
1503TO1502	8	1503	339.83	319.24	165.186	0.125	18	1,920	0.01	3.9	-0.621
1504TO1503	8	1504	344.33	340.23	109.067	0.038	18	1,054	0.02	2.5	-0.606
1505TO1504	8	1505	345.79	344.43	185.707	0.007	18	465	0.04	1.4	-0.577
1506TO1505	8	1506	348.15	345.89	93.293	0.024	18	846	0.02	2.2	-0.599
1507TO1506	8	1507	357.21	348.26	223	0.04	18	1,089	0.02	2.6	-0.607
1508TO1507	8	1508	359.09	357.31	178	0.01	18	544	0.03	1.6	-0.584
1509TO1499	8	1509	262.36	260.71	189.188	0.009	4	508	0.01	1.0	-0.625
1510TO1509	8	1510	293.69	263.31	156.952	0.194	4	2,392	0.00	2.8	-0.646
1511TO1510	8	1511	302.57	294.14	184.564	0.046	4	1,162	0.00	1.7	-0.638
1512TO1511	8	1512	307.36	302.86	105.008	0.043	4	1,126	0.00	1.7	-0.638
1532TO1535	8	1532	155.13	129.88	247	0.102	-	1,739	-	0.0	-0.667
1535TO1536	8	1535	129.78	129.26	104.9	0.005	7	383	0.02	0.9	-0.605
1536TO1537	8	1536	129.08	77.92	126.2	0.405	7	3,462	0.00	4.3	-0.645
1537TO91025	8	1537	77.82	76.41	17.895	0.079	7	1,526	0.00	2.4	-0.635
1540TO1541	8	1540	39.76	38.30	109.843	0.013	-	627	-	0.0	-0.667
1541TO2026	8	1541	38.20	35.46	190.574	0.014	62	652	0.09	2.6	-0.528
1542TO1540	8	1542	40.79	39.86	143.541	0.006	-	438	-	0.0	-0.667
1543TO1542	8	1543	41.44	40.80	137.111	0.005	-	372	-	0.0	-0.667
1557TO1559	8	1557	354.86	347.91	178.827	0.039	-	1,072	-	0.0	-0.667
1559TO1560	8	1559	347.81	343.90	201.282	0.019	-	758	-	0.0	-0.667
1560TO323006	8	1560	343.90	321.48	154.033	0.146	-	2,075	-	0.0	-0.667
1565TO1566	8	1565	256.19	243.07	130.442	0.101	19	1,725	0.01	3.6	-0.618
1566TO1567	8	1566	243.07	236.26	65.883	0.103	19	1,748	0.01	3.7	-0.618
1567TO1568	8	1567	236.16	222.87	159	0.084	19	1,572	0.01	3.4	-0.615
1568TO93063	8	1568	222.97	222.42	55.493	0.01	19	541	0.03	1.6	-0.581
1572TO93064	8	1572	235.39	231.72	88.705	0.041	111	1,106	0.10	4.5	-0.524
1573TO1572	8	1573	235.95	235.49	10	0.046	90	1,166	0.08	4.4	-0.541
1576TO93065	8	1576	253.59	245.97	162.024	0.047	84	1,179	0.07	4.4	-0.546

Bothell Sewer Comprehensive Plan
Sewer Model Results (Buildout Scenario)

Pipe ID	Diameter (in.)	Upstream MH	From Invert (ft)	To Invert (ft)	Length (ft)	Slope	Max Flow (gpm)	Capacity (gpm)	Max q/Q	Max Velocity (fps)	Upstream Max. Surcharge (ft)
1577TO3008	8	1577	124.93	114.11	343.3	0.032	67	965	0.07	3.5	-0.548
1599TO1600	8	1599	134.54	133.75	43.797	0.018	55	730	0.08	2.7	-0.543
1600TO1604	8	1600	133.75	130.93	160.164	0.018	55	722	0.08	2.7	-0.542
1601TO1602	8	1601	166.55	132.63	193.9	0.175	-	2,274	-	0.0	-0.667
1602TO1604	8	1602	132.53	130.93	151.299	0.011	6	559	0.01	1.1	-0.619
1603TO1602	8	1603	136.36	132.63	173.212	0.022	-	798	-	0.0	-0.667
1604TO1605	8	1604	130.83	130.20	157.005	0.004	61	344	0.18	1.7	-0.477
1605TO1606	8	1605	130.10	129.45	170.714	0.004	61	336	0.18	1.6	-0.475
1606TO1607	8	1606	129.45	128.32	299.088	0.004	61	334	0.18	1.6	-0.475
1607TO1620	8	1607	128.02	127.12	192.072	0.005	71	372	0.19	1.8	-0.47
1608TO2079	8	1608	241.93	238.62	136.42	0.024	23	847	0.03	2.3	-0.592
1609TO1608	8	1609	242.95	242.03	190.764	0.005	-	378	-	0.0	-0.667
1610TO1608	8	1610	248.80	242.03	253.701	0.027	23	888	0.03	2.4	-0.594
1611TO83045	8	1611	40.48	38.20	140.512	0.016	20	693	0.03	2.0	-0.589
1612TO1611	8	1612	45.79	40.33	154.962	0.035	20	1,021	0.02	2.6	-0.602
1613TO1612	8	1613	52.95	45.89	178.511	0.04	20	1,081	0.02	2.7	-0.604
1614TO1613	8	1614	60.06	53.05	210.02	0.033	-	994	-	0.0	-0.667
1620TO1621	8	1620	127.07	125.39	137.052	0.012	71	602	0.12	2.6	-0.513
1621TO1622	8	1621	125.29	125.06	79.03	0.003	71	293	0.24	1.5	-0.444
1622TO1623	8	1622	124.96	124.13	222.113	0.004	71	332	0.21	1.7	-0.458
1623TO91016	8	1623	124.08	123.92	18.084	0.009	71	512	0.14	2.3	-0.499
16403TO93072	8	16403	289.45	284.62	343.687	0.014	24	645	0.04	2.0	-0.58
16404TO16403	8	16404	290.35	289.55	208	0.004	24	337	0.07	1.2	-0.547
16405TO16404	8	16405	291.25	290.35	132	0.007	-	449	-	0.0	-0.667
16406TO16405	8	16406	291.36	291.25	47	0.002	-	263	-	0.0	-0.667
16407TO16404	8	16407	300.90	290.35	142.865	0.074	24	1,478	0.02	3.5	-0.608
16408TO16407	8	16408	314.70	301.00	87.698	0.156	24	2,149	0.01	4.5	-0.618
16411TO16408	8	16411	338.14	314.70	172.65	0.136	24	2,004	0.01	4.3	-0.616
16412TO16411	8	16412	348.45	338.14	285	0.036	-	1,034	-	0.0	-0.667
16413TO16411	8	16413	343.27	338.14	215	0.024	-	840	-	0.0	-0.667
16414TO16413	8	16414	350.69	343.37	248.491	0.029	-	933	-	0.0	-0.667
1642TO91031	12	1642	22.65	22.42	136.246	0.002	478	659	0.73	2.0	-0.371

Bothell Sewer Comprehensive Plan
Sewer Model Results (Buildout Scenario)

Pipe ID	Diameter (in.)	Upstream MH	From Invert (ft)	To Invert (ft)	Length (ft)	Slope	Max Flow (gpm)	Capacity (gpm)	Max q/Q	Max Velocity (fps)	Upstream Max. Surcharge (ft)
1643TO1644	12	1643	33.52	31.29	46.436	0.048	-	3,514	-	0.0	-1
1644TO1650	12	1644	31.19	29.21	396.454	0.005	-	1,133	-	0.0	-1
1650TO1651	12	1650	29.11	28.25	115.263	0.007	-	1,385	-	0.0	-1
1651TO1652	12	1651	28.15	24.63	310.995	0.011	-	1,706	-	0.0	-1
1652TO52009	12	1652	24.52	22.28	190.949	0.012	-	1,737	-	0.0	-1
1667TO1668	8	1667	35.34	33.24	209.999	0.01	427	544	0.79	3.8	-0.222
1668TO81013	8	1668	33.14	31.22	192.25	0.01	427	543	0.79	3.8	-0.222
1677TO61031	8	1677	233.12	224.92	131	0.063	23	1,361	0.02	3.2	-0.607
1678TO1681	8	1678	223.17	213.62	350	0.027	70	898	0.08	3.4	-0.541
1680TO1681	8	1680	214.94	213.62	265.474	0.005	-	383	-	0.0	-0.667
1681TO1682	8	1681	213.62	209.51	295	0.014	164	642	0.25	3.4	-0.437
1682TO1683	8	1682	208.62	206.62	409.984	0.005	164	380	0.43	2.3	-0.361
1683TO1685	8	1683	205.62	201.72	205	0.019	164	750	0.22	3.8	-0.455
1684TO1683	8	1684	206.62	205.72	183.07	0.005	-	381	-	0.0	-0.667
1685TO1694	8	1685	201.62	199.83	97.661	0.018	164	736	0.22	3.8	-0.453
1688TO1689	8	1688	198.86	197.91	189	0.005	-	386	-	0.0	-0.667
1689TO1690	8	1689	197.81	197.42	78.384	0.005	-	384	-	0.0	-0.667
1690TO1691	8	1690	197.32	195.61	340.407	0.005	-	385	-	0.0	-0.667
1691TO1693	8	1691	195.51	194.14	275	0.005	-	384	-	0.0	-0.667
1693TO1694	8	1693	194.04	192.16	372.466	0.005	-	386	-	0.0	-0.667
1694TO61052	8	1694	192.06	188.80	23.954	0.136	164	2,006	0.08	7.7	-0.538
1718TO43031	36	1718	8.46	6.76	1704	0.001	896	9,492	0.09	1.9	-2.378
17301TO18205	8	17301	144.39	134.34	124.539	0.081	19	1,545	0.01	3.4	-0.615
17303TO3017	8	17303	156.17	148.10	144.051	0.056	19	1,287	0.01	3.0	-0.61
17304TO17303	8	17304	160.40	156.27	101.458	0.041	19	1,097	0.02	2.7	-0.606
17306TO17304	8	17306	187.23	160.50	261.132	0.102	19	1,740	0.01	3.7	-0.618
17308TO17307	8	17308	198.74	187.23	126.89	0.091	19	1,638	0.01	3.5	-0.616
17309TO17308	8	17309	204.11	198.74	116.345	0.046	-	1,168	-	0.0	-0.667
17311TO17308	8	17311	209.54	198.74	154.178	0.07	19	1,439	0.01	3.2	-0.613
17312TO17311	8	17312	214.28	209.64	155.011	0.03	19	941	0.02	2.4	-0.601
17313TO17321	8	17313	215.18	214.48	58.576	0.012	-	594	-	0.0	-0.667
17314TO17312	8	17314	217.51	214.48	65.211	0.046	19	1,172	0.02	2.8	-0.608

Bothell Sewer Comprehensive Plan
Sewer Model Results (Buildout Scenario)

Pipe ID	Diameter (in.)	Upstream MH	From Invert (ft)	To Invert (ft)	Length (ft)	Slope	Max Flow (gpm)	Capacity (gpm)	Max q/Q	Max Velocity (fps)	Upstream Max. Surcharge (ft)
17315TO17314	8	17315	238.74	217.71	154.69	0.136	19	2,005	0.01	4.0	-0.621
17316TO17315	8	17316	247.25	238.84	99.081	0.085	19	1,584	0.01	3.4	-0.615
17317TO17316	8	17317	248.69	247.35	74.837	0.018	19	728	0.03	2.0	-0.593
17318TO17317	8	17318	254.12	248.89	120.455	0.043	-	1,133	-	0.0	-0.667
17319TO17318	8	17319	259.47	254.16	95.899	0.055	-	1,280	-	0.0	-0.667
17320TO17319	8	17320	268.88	259.67	98.604	0.093	-	1,662	-	0.0	-0.667
17321TO17322	8	17321	241.48	239.69	105.072	0.017	-	710	-	0.0	-0.667
17322TO17324	8	17322	239.69	233.04	195.093	0.034	14	1,004	0.01	2.3	-0.611
17323TO17322	8	17323	259.64	239.69	210.441	0.095	-	1,674	-	0.0	-0.667
17324TO17325	8	17324	232.94	230.64	69.941	0.033	14	986	0.01	2.3	-0.611
17325TO17327	8	17325	230.44	226.35	78.075	0.052	14	1,245	0.01	2.6	-0.617
17326TO17337	8	17326	189.07	186.62	132.282	0.019	14	740	0.02	1.8	-0.603
17327TO17328	8	17327	226.25	220.89	78.333	0.068	14	1,422	0.01	2.9	-0.62
17328TO17329	8	17328	220.79	206.41	115.237	0.125	14	1,921	0.01	3.6	-0.626
17329TO17331	8	17329	206.21	200.27	59.778	0.099	14	1,714	0.01	3.3	-0.624
17331TO17332	8	17331	200.07	194.33	60.409	0.095	14	1,676	0.01	3.3	-0.623
17332TO17326	8	17332	194.13	189.07	111.696	0.045	14	1,157	0.01	2.5	-0.615
17333TO17332	8	17333	194.64	194.13	61.36	0.008	-	496	-	0.0	-0.667
17334TO17333	8	17334	199.87	194.74	66.168	0.078	-	1,514	-	0.0	-0.667
17337TO17338	8	17337	186.52	178.59	150.588	0.053	14	1,248	0.01	2.7	-0.617
17338TO17339	8	17338	178.39	164.55	156.486	0.088	20	1,617	0.01	3.5	-0.615
17339TO2061	8	17339	164.45	162.42	74.758	0.027	20	896	0.02	2.3	-0.598
17340TO17339	8	17340	175.68	164.55	195.22	0.057	-	1,298	-	0.0	-0.667
17341TO17340	8	17341	183.23	175.78	271.975	0.027	-	900	-	0.0	-0.667
17343TO2027	8	17343	149.91	140.14	432.252	0.023	20	818	0.02	2.2	-0.595
17401TO83042	8	17401	457.73	456.46	200.089	0.006	-	433	-	0.0	-0.667
17403TO18153	8	17403	140.13	139.70	45.2	0.01	-	530	-	0.0	-0.667
17406TO17403	8	17406	141.65	140.33	229.789	0.006	-	412	-	0.0	-0.667
17407TO17406	8	17407	173.62	141.65	301.277	0.106	-	1,771	-	0.0	-0.667
17408TO18153	8	17408	156.85	139.90	234.766	0.072	55	1,461	0.04	4.5	-0.578
17409TO17408	8	17409	161.09	156.95	87.795	0.047	55	1,181	0.05	3.8	-0.569
17410TO17409	8	17410	175.43	161.46	126.214	0.111	-	1,809	-	0.0	-0.667

Bothell Sewer Comprehensive Plan
Sewer Model Results (Buildout Scenario)

Pipe ID	Diameter (in.)	Upstream MH	From Invert (ft)	To Invert (ft)	Length (ft)	Slope	Max Flow (gpm)	Capacity (gpm)	Max q/Q	Max Velocity (fps)	Upstream Max. Surcharge (ft)
17412TO17409	8	17412	176.97	161.46	215.532	0.072	55	1,459	0.04	4.5	-0.578
17413TO17412	8	17413	187.66	176.97	131.882	0.081	-	1,548	-	0.0	-0.667
17415TO17412	8	17415	185.10	176.97	97.78	0.083	55	1,568	0.04	4.7	-0.581
17416TO17415	8	17416	190.30	185.20	96.66	0.053	55	1,249	0.04	4.0	-0.571
17417TO17416	8	17417	191.05	190.50	110.442	0.005	-	384	-	0.0	-0.667
17418TO17416	8	17418	203.69	190.50	126.471	0.104	55	1,756	0.03	5.1	-0.586
17420TO17418	8	17420	214.43	203.69	83.164	0.129	55	1,954	0.03	5.5	-0.59
17421TO17420	8	17421	220.87	214.43	96.158	0.067	-	1,407	-	0.0	-0.667
17422TO17421	8	17422	226.67	220.87	208.628	0.028	-	907	-	0.0	-0.667
17423TO17421	8	17423	251.02	220.97	224.732	0.134	-	1,989	-	0.0	-0.667
17424TO17420	8	17424	218.21	214.43	58.345	0.065	55	1,384	0.04	4.3	-0.576
17425TO17424	8	17425	221.26	218.31	89.632	0.033	55	987	0.06	3.4	-0.56
17426TO17425	8	17426	256.86	221.26	323.381	0.11	-	1,804	-	0.0	-0.667
18101TO18102	8	18101	29.12	24.12	193.999	0.026	-	873	-	0.0	-0.667
18102TO72027	8	18102	24.12	22.01	218.268	0.01	-	535	-	0.0	-0.667
18103TO18102	8	18103	33.00	24.12	174.61	0.051	-	1,226	-	0.0	-0.667
18104TO18103	8	18104	37.62	33.10	90.772	0.05	-	1,213	-	0.0	-0.667
18105TO18104	8	18105	49.92	37.62	200.664	0.061	-	1,346	-	0.0	-0.667
18106TO18105	8	18106	56.99	49.92	126.469	0.056	-	1,286	-	0.0	-0.667
18107TO18106	8	18107	59.72	56.99	74.454	0.037	-	1,041	-	0.0	-0.667
18108TO18107	8	18108	91.06	60.02	222.805	0.139	-	2,030	-	0.0	-0.667
18109TO18108	8	18109	109.12	91.06	213.753	0.084	-	1,581	-	0.0	-0.667
18110TO18109	8	18110	115.62	109.12	341.761	0.019	-	750	-	0.0	-0.667
18111TO18108	8	18111	128.12	91.06	213	0.174	-	2,268	-	0.0	-0.667
18112TO18111	8	18112	151.12	128.12	162.047	0.142	-	2,049	-	0.0	-0.667
18113TO72027	8	18113	36.94	22.01	186.95	0.08	248	1,537	0.16	7.2	-0.486
18114TO18113	8	18114	38.19	36.94	154.416	0.008	248	489	0.51	3.1	-0.331
18115TO18114	8	18115	42.12	38.59	90.005	0.039	-	1,077	-	0.0	-0.667
18117TO18114	8	18117	49.62	38.59	227.022	0.049	248	1,199	0.21	6.0	-0.461
18120TO18117	8	18120	58.52	49.62	200	0.044	248	1,147	0.22	5.8	-0.456
18122TO18120	8	18122	87.12	58.52	201.868	0.142	248	2,047	0.12	8.8	-0.51
18123TO18122	8	18123	117.68	87.12	268	0.114	248	1,836	0.14	8.2	-0.501

Bothell Sewer Comprehensive Plan
Sewer Model Results (Buildout Scenario)

Pipe ID	Diameter (in.)	Upstream MH	From Invert (ft)	To Invert (ft)	Length (ft)	Slope	Max Flow (gpm)	Capacity (gpm)	Max q/Q	Max Velocity (fps)	Upstream Max. Surcharge (ft)
18124TO18123	8	18124	130.55	117.68	344.894	0.037	-	1,050	-	0.0	-0.667
18125TO18124	8	18125	138.85	130.55	217.761	0.038	-	1,062	-	0.0	-0.667
18126TO18125	8	18126	158.07	138.85	299.451	0.064	-	1,378	-	0.0	-0.667
18127TO72026	10	18127	30.07	24.47	148.445	0.038	257	1,915	0.13	5.4	-0.627
18128TO18127	10	18128	38.52	30.07	386.33	0.022	257	1,458	0.18	4.5	-0.597
18129TO18128	10	18129	42.82	38.52	212.176	0.02	257	1,404	0.18	4.4	-0.592
18130TO18129	10	18130	48.82	42.82	129.051	0.046	257	2,126	0.12	5.9	-0.638
18131TO18130	10	18131	55.23	48.82	191	0.034	257	1,806	0.14	5.2	-0.621
18132TO18131	10	18132	58.27	55.23	150.573	0.02	257	1,401	0.18	4.4	-0.592
18133TO18132	10	18133	65.12	58.27	182.553	0.038	257	1,910	0.13	5.4	-0.627
18134TO18133	10	18134	74.98	65.12	279.689	0.035	257	1,851	0.14	5.3	-0.624
18135TO18134	10	18135	89.51	74.98	338.795	0.043	257	2,042	0.13	5.7	-0.634
18136TO18135	10	18136	90.51	89.51	139.253	0.007	257	836	0.31	3.0	-0.516
18137TO18136	10	18137	99.11	90.51	117.601	0.073	257	2,666	0.10	6.9	-0.659
18141TO18137	10	18141	100.07	99.11	53.941	0.018	171	1,315	0.13	3.7	-0.631
18142TO18141	10	18142	104.02	100.07	190.317	0.021	171	1,420	0.12	3.9	-0.638
18143TO18142	10	18143	107.24	104.12	67.692	0.046	171	2,117	0.08	5.2	-0.673
18144TO18143	10	18144	113.96	107.34	123.322	0.054	171	2,284	0.07	5.5	-0.679
18145TO18144	10	18145	114.65	113.96	109.805	0.006	171	782	0.22	2.6	-0.569
18149TO18145	10	18149	122.99	114.65	184.37	0.045	171	2,097	0.08	5.2	-0.673
18150TO18149	8	18150	123.76	123.09	110.182	0.006	55	424	0.13	1.9	-0.504
18152TO18150	8	18152	131.00	123.86	183.4	0.039	55	1,073	0.05	3.6	-0.564
18153TO18152	8	18153	139.90	131.10	143.225	0.061	55	1,348	0.04	4.2	-0.575
18154TO18155	8	18154	146.44	127.56	169.937	0.111	-	1,813	-	0.0	-0.667
18155TO18156	8	18155	127.51	121.59	86.983	0.068	-	1,419	-	0.0	-0.667
18156TO18157	8	18156	121.59	121.37	57.006	0.004	-	338	-	0.0	-0.667
18157TO18158	8	18157	121.18	113.18	145.499	0.055	-	1,275	-	0.0	-0.667
18158TO18159	8	18158	112.95	110.87	49.041	0.042	-	1,120	-	0.0	-0.667
18159TO18160	8	18159	110.77	104.87	122.191	0.048	-	1,195	-	0.0	-0.667
18160TO18142	6	18160	104.87	104.12	22.257	0.034	-	464	-	0.0	-0.5
18201TO18149	10	18201	132.79	122.99	266.613	0.037	116	1,890	0.06	4.3	-0.694
18203TO18201	10	18203	133.32	132.89	120	0.004	116	590	0.20	1.9	-0.583

Bothell Sewer Comprehensive Plan
Sewer Model Results (Buildout Scenario)

Pipe ID	Diameter (in.)	Upstream MH	From Invert (ft)	To Invert (ft)	Length (ft)	Slope	Max Flow (gpm)	Capacity (gpm)	Max q/Q	Max Velocity (fps)	Upstream Max. Surcharge (ft)
18205TO18203	10	18205	134.24	133.42	150	0.005	116	729	0.16	2.2	-0.609
18206TO18205	10	18206	134.91	134.34	47.514	0.012	97	1,080	0.09	2.7	-0.665
18207TO18206	10	18207	135.39	135.01	76	0.005	97	697	0.14	2.0	-0.624
18208TO18207	10	18208	136.31	135.60	163	0.004	97	651	0.15	1.9	-0.616
18209TO18208	10	18209	137.88	136.41	279.701	0.005	97	715	0.14	2.0	-0.626
18210TO18209	10	18210	139.63	137.98	342.892	0.005	97	684	0.14	2.0	-0.622
2001TO84077	8	84077	29.60	29.18	55.77	0.008	93	472	0.20	2.3	-0.466
2012TO2088	8	2102	57.86	35.55	220.4	0.101	-	1,730	-	0.0	-0.667
2015TO2119	8	2015	208.12	184.22	405.263	0.059	6	1,321	0.00	2.1	-0.635
2019TO71095	8	2019	40.46	36.02	204.879	0.022	24	801	0.03	2.3	-0.587
2021TO2118	8	2021	153.11	148.90	160.93	0.026	-	880	-	0.0	-0.667
2026TO84070	8	2026	35.36	34.72	48.213	0.013	62	627	0.10	2.5	-0.526
2027TO18210	10	2027	140.04	139.73	18.349	0.017	20	1,282	0.02	1.9	-0.761
2028TO43031	8	2028	21.62	6.76	804.583	0.018	-	739	-	0.0	-0.667
2029TO63043	8	2029	259.42	254.33	312.694	0.016	32	694	0.05	2.3	-0.569
2030TO63039	8	2030	263.62	260.31	222.851	0.015	-	663	-	0.0	-0.667
2031TO71095	8	2031	44.62	35.92	309.603	0.028	181	912	0.20	4.5	-0.466
2035TO2036	36	2035	-6.36	-6.52	155	0.001	5,979	9,492	0.63	3.2	-1.354
2036TO2037	36	2036	-6.62	-6.86	245	0.001	5,979	9,492	0.63	3.2	-1.384
2040TO1576	8	2040	260.24	253.69	139.555	0.047	67	1,178	0.06	4.1	-0.559
2042TO2044	12	2042	36.94	36.19	237	0.003	282	902	0.31	2.3	-0.617
2044TO94017	12	2044	36.19	36.00	60.301	0.003	282	900	0.31	2.3	-0.444
2045TO82019	8	2045	33.26	30.62	352.046	0.007	-	471	-	0.0	-0.667
2047TO2054	8	2047	104.65	103.92	130	0.006	-	408	-	0.0	-0.667
2048TO44003	8	2048	52.96	36.62	76.899	0.212	-	2,507	-	0.0	-0.667
2049TO2051	8	2049	66.01	57.68	93.406	0.089	-	1,624	-	0.0	-0.667
2051TO2048	8	2051	57.38	52.99	121.772	0.036	-	1,033	-	0.0	-0.667
2052TO84069	8	2052	39.13	35.80	46	0.072	-	1,463	-	0.0	-0.667
2053TO2042	12	2053	37.53	36.94	185	0.003	282	905	0.31	2.3	-0.618
2054TO2077	8	2054	103.82	103.21	117	0.005	-	393	-	0.0	-0.667
2055TO2049	8	2055	75.60	66.21	70.281	0.134	-	1,988	-	0.0	-0.667
2056TO2053	12	2056	38.62	37.53	343	0.003	282	904	0.31	2.3	-0.617

Bothell Sewer Comprehensive Plan
Sewer Model Results (Buildout Scenario)

Pipe ID	Diameter (in.)	Upstream MH	From Invert (ft)	To Invert (ft)	Length (ft)	Slope	Max Flow (gpm)	Capacity (gpm)	Max q/Q	Max Velocity (fps)	Upstream Max. Surcharge (ft)
2058TO2055	8	2058	91.78	75.90	101.791	0.156	-	2,148	-	0.0	-0.667
2059TO2056	12	2059	39.43	38.62	253	0.003	282	907	0.31	2.3	-0.618
2060TO1613	8	2060	61.63	53.06	234.016	0.037	-	1,041	-	0.0	-0.667
2061TO17343	8	2061	162.32	150.01	233.469	0.053	20	1,249	0.02	2.9	-0.608
2062TO2058	8	2062	109.56	92.06	160.645	0.109	-	1,795	-	0.0	-0.667
2062TO2071	12	SMH2062	42.38	39.02	46	0.073	67	4,333	0.02	4.5	-0.913
2063TO2064	12	SMH2063	36.15	34.69	156	0.009	67	1,551	0.04	2.2	-0.859
2063TO71080	12	SMH2068	30.70	27.48	161	0.02	1,168	2,267	0.52	6.5	-0.493
2064TO2065	12	SMH2064	34.59	33.44	161	0.007	230	1,355	0.17	2.9	-0.722
2065TO2060	8	2065	70.13	61.73	56.004	0.15	-	2,106	-	0.0	-0.667
2065TO2066	12	SMH2065	18.77	16.75	107	0.019	230	2,203	0.10	4.0	-0.782
2066TO61032	8	2066	225.02	224.35	184.084	0.004	47	328	0.14	1.5	-0.496
2066TO71078	18	SSMH2066	16.25	16.00	26	0.01	1,396	4,635	0.30	5.1	-0.937
2067TO2062	8	2067	117.89	110.06	106.77	0.073	-	1,473	-	0.0	-0.667
2067TO2066	12	SSMH2067	17.77	16.75	92	0.011	1,168	1,688	0.69	5.2	-0.391
2069TO2065	12	SMH2069	33.62	32.00	81	0.02	-	2,267	-	0.0	-1
2070TO2069	12	SMH2070	40.00	33.72	130	0.048	-	3,524	-	0.0	-1
2070TO94005	12	2070	13.21	9.94	25	0.131	366	5,800	0.06	9.2	-0.83
2071TO2063	12	SMH2071	38.92	36.21	264	0.01	67	1,624	0.04	2.3	-0.862
2071TO2070	12	2071	16.72	13.31	202	0.017	366	2,081	0.18	4.4	-0.716
2072TO2064	12	SMH2072	35.30	34.69	75	0.008	163	1,446	0.11	2.7	-0.774
2072TO2071	12	2072	26.09	16.82	550.162	0.017	366	2,081	0.18	4.4	-0.716
2073TO2074	8	SMH2073	28.90	26.41	249	0.01	-	544	-	0.0	-0.667
2073TO3020	8	2073	139.02	127.02	210.01	0.057	-	1,300	-	0.0	-0.667
2074TO2075	8	SMH2074	26.31	20.90	144	0.038	-	1,054	-	0.0	-0.667
2075TO930	12	SMH2075	20.75	18.20	250	0.01	205	1,619	0.13	3.1	-0.76
2076TO2075	12	SMH2076	22.81	20.90	59	0.032	205	2,885	0.07	4.7	-0.82
2077TO2076	12	SMH2077	23.45	22.91	54	0.01	205	1,603	0.13	3.1	-0.759
2077TO91043	8	2077	103.11	102.22	65	0.014	-	636	-	0.0	-0.667
2078TO2077	12	SMH2078	25.40	23.55	107	0.017	205	2,108	0.10	3.8	-0.79
2078TO82001	21	2078	22.96	22.67	281.331	0.001	451	2,278	0.20	1.6	-1.223
2079TO1677	8	2079	238.62	233.22	146	0.037	23	1,046	0.02	2.7	-0.599

Bothell Sewer Comprehensive Plan
Sewer Model Results (Buildout Scenario)

Pipe ID	Diameter (in.)	Upstream MH	From Invert (ft)	To Invert (ft)	Length (ft)	Slope	Max Flow (gpm)	Capacity (gpm)	Max q/Q	Max Velocity (fps)	Upstream Max. Surcharge (ft)
2079TO2078	12	SSMH2079	26.60	25.50	110	0.01	205	1,603	0.13	3.1	-0.759
2080TO2079	12	SMH2080	28.60	27.60	50	0.02	-	2,267	-	0.0	-1
2081TO2079	12	SSMH2081	27.40	26.70	70	0.01	-	1,603	-	0.0	-1
2082TO2075	12	SMH2082	23.42	20.90	252	0.01	-	1,603	-	0.0	-1
2082TO84047	8	2082	82.52	82.38	37.6	0.004	-	332	-	0.0	-0.667
2083TO2082	12	SMH2083	29.10	23.52	125	0.045	-	3,388	-	0.0	-1
2083TO2115	8	2083	26.94	25.24	294.856	0.006	98	413	0.24	2.2	-0.446
2084TO2083	12	SMH2084	30.24	29.20	33	0.032	-	2,846	-	0.0	-1
2084TO2093	8	2084	41.43	39.86	238.741	0.007	-	441	-	0.0	-0.667
2088TO2045	8	2088	35.55	33.36	42.479	0.052	-	1,235	-	0.0	-0.667
2089TO18123	8	2089	152.12	117.78	224	0.153	248	2,129	0.12	9.1	-0.513
2090TO71027	12	SMH2090	43.96	45.92	46	-0.043	907	907	1.00	2.6	2.106
2091TO2078	21	2091	23.08	23.01	45.001	0.002	451	2,812	0.16	1.9	-1.277
2091TO2090	12	SMH2091	45.00	43.96	127	0.008	907	1,451	0.63	4.3	1.47
2092TO2091	12	SMH2092	45.75	45.00	92	0.008	907	1,448	0.63	4.3	1.012
2093TO2052	8	2093	39.86	39.13	78.92	0.009	-	523	-	0.0	-0.667
2093TO2092	12	SMH2093	46.82	45.82	91	0.011	907	1,681	0.54	4.9	0.232
2094TO84067	8	2094	29.62	22.62	51.704	0.135	290	2,001	0.15	9.1	-0.495
2096TO2065	8	2096	80.10	70.24	165.95	0.059	-	1,326	-	0.0	-0.667
2098TO84046	8	2098	84.99	81.59	32.5	0.105	50	1,759	0.03	4.9	-0.59
2099TO2112	8	2099	80.82	80.22	133	0.005	50	365	0.14	1.6	-0.501
2100TO2091	21	2100	23.18	23.13	34.472	0.002	451	2,796	0.16	1.9	-1.276
2101TO2021	8	2101	174.23	153.31	143.71	0.146	-	2,075	-	0.0	-0.667
2102TO62015	8	2120	122.41	107.40	178.589	0.084	187	1,577	0.12	6.8	-0.512
2103TO1643	12	2103	54.33	43.62	380	0.028	-	2,692	-	0.0	-1
2104TO2084	8	2104	42.57	41.43	210.615	0.005	-	400	-	0.0	-0.667
2105TO2106	8	2105	127.31	39.58	422.93	0.207	-	2,477	-	0.0	-0.667
2106TO82019	8	2106	39.49	38.17	170.325	0.008	-	478	-	0.0	-0.667
2107TO1607	8	2107	155.26	128.32	292.253	0.092	10	1,651	0.01	2.9	-0.629
2108TO1614	8	2108	78.20	60.09	212.893	0.085	-	1,586	-	0.0	-0.667
2112TO84045	8	2112	80.12	79.72	29.939	0.013	50	629	0.08	2.4	-0.54
2115TO2116	8	2115	25.14	23.15	347.629	0.006	98	411	0.24	2.2	-0.445

Bothell Sewer Comprehensive Plan
Sewer Model Results (Buildout Scenario)

Pipe ID	Diameter (in.)	Upstream MH	From Invert (ft)	To Invert (ft)	Length (ft)	Slope	Max Flow (gpm)	Capacity (gpm)	Max q/Q	Max Velocity (fps)	Upstream Max. Surcharge (ft)
2116TO51016	8	2116	23.05	22.45	98.851	0.006	98	424	0.23	2.2	-0.449
2117TO83024	8	2117	325.76	317.59	151	0.054	-	1,265	-	0.0	-0.667
2118TO3017	8	2118	148.63	148.10	103.742	0.005	-	389	-	0.0	-0.667
2119TO17338	8	2119	184.12	178.49	176.082	0.032	6	972	0.01	1.7	-0.63
2125TO53025	8	2125	110.37	84.13	386.784	0.068	13	1,416	0.01	2.8	-0.621
2129TO2130	8	2129	29.26	28.21	164.6	0.006	339	434	0.78	3.1	-0.224
2130TO2135	8	2130	28.11	27.80	123	0.003	339	273	1.24	2.2	0.168
2131TO2132	8	2131	24.20	23.53	283	0.002	339	265	1.28	2.2	0.825
2132TO1642	8	2132	23.43	22.75	307.5	0.002	339	256	1.32	2.2	0.503
2133TO2131	8	2133	25.42	24.30	205.8	0.005	339	401	0.84	2.9	-0.198
2134TO2133	8	2134	26.43	25.52	133.7	0.007	339	449	0.76	3.1	-0.235
2135TO2134	8	2135	27.70	26.53	236.8	0.005	339	382	0.89	2.8	-0.18
2136TO2129	8	2136	34.27	29.36	251	0.02	339	761	0.45	4.7	-0.355
2137TO2136	8	2137	36.75	34.37	60.9	0.039	339	1,075	0.32	6.1	-0.41
3002TO84007	8	3002	49.93	46.72	158	0.02	13	775	0.02	1.8	-0.607
3003TO3002	8	3003	55.53	50.03	263.5	0.021	13	786	0.02	1.9	-0.608
3004TO3003	8	3004	58.42	55.63	121.334	0.023	13	825	0.02	1.9	-0.609
3005TO3004	8	3005	59.18	58.52	32.167	0.021	13	779	0.02	1.8	-0.608
3006TO61015	8	3006	225.67	218.39	180	0.04	91	1,094	0.08	4.2	-0.536
3008TO3009	8	3008	114.01	97.81	202.537	0.08	67	1,538	0.04	4.9	-0.572
3009TO3010	8	3009	97.69	83.63	135.156	0.104	67	1,754	0.04	5.4	-0.578
3010TO71063	8	3010	83.48	82.52	12.203	0.079	67	1,525	0.04	4.9	-0.572
3011TO82013	8	3011	20.86	17.71	303.553	0.01	269	554	0.49	3.5	-0.339
3012TO3011	8	3012	23.34	20.96	228.792	0.01	269	554	0.49	3.5	-0.339
3013TO3012	8	3013	24.92	23.44	142.764	0.01	269	554	0.49	3.5	-0.339
3014TO3013	8	3014	27.67	25.02	255.389	0.01	269	554	0.49	3.5	-0.339
3017TO17301	8	3017	148.00	144.49	77.91	0.045	19	1,154	0.02	2.7	-0.607
3018TO17325	8	3018	253.07	230.64	200.014	0.112	-	1,821	-	0.0	-0.667
3019TO84033	8	3019	77.52	76.92	88.426	0.007	19	448	0.04	1.4	-0.574
3020TO1577	8	3020	126.92	125.03	178.452	0.011	-	560	-	0.0	-0.667
312001TO312002	8	312001	258.86	256.98	348.369	0.005	-	399	-	0.0	-0.667
312002TO312006	8	312002	256.88	251.62	325.009	0.016	-	692	-	0.0	-0.667

Bothell Sewer Comprehensive Plan
Sewer Model Results (Buildout Scenario)

Pipe ID	Diameter (in.)	Upstream MH	From Invert (ft)	To Invert (ft)	Length (ft)	Slope	Max Flow (gpm)	Capacity (gpm)	Max q/Q	Max Velocity (fps)	Upstream Max. Surcharge (ft)
312003TO312004	8	312003	268.13	260.54	246.7	0.031	26	954	0.03	2.6	-0.591
312004TO312005	8	312004	260.54	252.24	286.679	0.029	26	925	0.03	2.6	-0.59
312005TO312006	8	312005	252.30	251.62	38.53	0.018	26	722	0.04	2.2	-0.581
312006TO312007	8	312006	251.52	250.32	119.099	0.01	26	546	0.05	1.8	-0.568
312007TO312008	8	312007	250.22	249.62	43.28	0.014	26	640	0.04	2.0	-0.576
312008TO61002	8	312008	249.62	248.32	158.242	0.008	26	493	0.05	1.7	-0.563
312009TO312008	8	312009	253.58	252.12	135.926	0.011	-	564	-	0.0	-0.667
312010TO312009	8	312010	255.08	253.58	110.773	0.014	-	633	-	0.0	-0.667
312011TO312010	8	312011	256.36	255.18	358.6	0.003	-	312	-	0.0	-0.667
312012TO312011	8	312012	256.66	256.36	128.934	0.002	-	262	-	0.0	-0.667
312014TO1500	8	312014	260.23	259.84	147.873	0.003	-	279	-	0.0	-0.667
312015TO61006	10	312015	259.36	257.56	424.792	0.004	36	642	0.06	1.4	-0.7
312016TO312018	8	312016	259.42	258.62	150	0.005	-	397	-	0.0	-0.667
312017TO312018	8	312017	260.22	258.62	245.927	0.007	-	439	-	0.0	-0.667
312018TO312019	8	312018	258.52	258.22	20	0.015	-	666	-	0.0	-0.667
312019TO312002	8	312019	258.12	256.98	176.033	0.006	-	438	-	0.0	-0.667
323001TO323002	8	323001	344.19	336.91	374.118	0.019	20	759	0.03	2.1	-0.592
323002TO323003	8	323002	336.91	335.67	326.928	0.004	20	335	0.06	1.2	-0.557
323003TO323003	8	323003	335.67	329.75	121.986	0.049	20	1,198	0.02	2.9	-0.607
323004TO323005	8	323004	329.75	322.22	104.741	0.072	20	1,458	0.01	3.3	-0.612
323005TO323006	8	323005	322.22	321.38	203.485	0.004	20	349	0.06	1.2	-0.559
323006TO323007	8	323006	321.38	321.20	280.398	0.001	20	138	0.14	0.6	-0.496
323007TO323008	8	323007	321.20	319.94	165.641	0.008	20	474	0.04	1.5	-0.574
323008TO323012	8	323008	318.77	310.87	173.535	0.046	27	1,160	0.02	3.1	-0.597
323009TO323008	8	323009	356.50	332.62	318.924	0.075	7	1,488	0.00	2.4	-0.634
323010TO323009	8	323010	359.00	356.60	189.703	0.013	7	612	0.01	1.3	-0.617
323011TO323010	8	323011	362.62	359.00	400	0.009	7	517	0.01	1.1	-0.613
323012TO54067	8	323012	310.87	310.08	168.255	0.005	126	373	0.34	2.2	13.469
323015TO323013	8	323015	300.71	293.62	205	0.035	5	1,011	0.01	1.7	-0.632
323016TO323015	8	323016	303.87	300.71	80	0.04	5	1,081	0.00	1.8	-0.633
323017TO323016	8	323017	304.15	303.87	280	0.001	5	172	0.03	0.5	-0.586
323018TO323017	8	323018	305.78	304.15	153.753	0.011	5	560	0.01	1.1	-0.621

Bothell Sewer Comprehensive Plan
Sewer Model Results (Buildout Scenario)

Pipe ID	Diameter (in.)	Upstream MH	From Invert (ft)	To Invert (ft)	Length (ft)	Slope	Max Flow (gpm)	Capacity (gpm)	Max q/Q	Max Velocity (fps)	Upstream Max. Surcharge (ft)
323019TO323018	8	323019	306.37	305.78	150.926	0.004	5	340	0.02	0.8	-0.608
41003TO41004	8	41003	326.90	320.62	218.651	0.029	24	922	0.03	2.5	-0.592
41004TO41005	8	41004	320.62	310.41	247.941	0.041	24	1,104	0.02	2.9	-0.598
41005TO41007	8	41005	310.41	301.10	419.678	0.022	24	810	0.03	2.3	-0.587
41007TO41013	8	41007	301.10	290.22	345.621	0.031	24	965	0.03	2.6	-0.594
41008TO41007	8	41008	308.92	301.10	53.268	0.147	-	2,084	-	0.0	-0.667
41009TO41008	8	41009	317.06	308.92	146.313	0.056	-	1,283	-	0.0	-0.667
41010TO41009	8	41010	323.90	317.06	210	0.033	-	981	-	0.0	-0.667
41011TO41010	8	41011	326.52	323.90	118	0.022	-	810	-	0.0	-0.667
41012TO41011	8	41012	330.51	326.52	220.103	0.018	-	732	-	0.0	-0.667
41013TO41016	8	41013	290.22	287.72	186.901	0.013	24	629	0.04	1.9	-0.577
41014TO41013	8	41014	304.58	290.22	126.224	0.114	-	1,834	-	0.0	-0.667
41015TO41014	8	41015	315.16	304.60	254.702	0.041	-	1,107	-	0.0	-0.667
41016TO41017	8	41016	287.62	286.12	156.433	0.01	24	533	0.05	1.7	-0.57
41017TO41018	8	41017	286.12	284.30	45	0.04	24	1,094	0.02	2.9	-0.598
41018TO21021	8	41018	284.30	282.08	248.835	0.009	50	514	0.10	2.1	-0.527
41020TO41019	8	41020	307.85	288.94	279.5	0.068	-	1,414	-	0.0	-0.667
41021TO41022	8	41021	282.08	271.42	179.1	0.06	50	1,327	0.04	4.0	-0.579
41022TO41023	8	41022	271.42	271.34	117.2	0.001	50	142	0.35	0.8	-0.395
41023TO41024	8	41023	271.34	269.77	174.127	0.009	50	516	0.10	2.1	-0.527
41024TO41025	8	41024	269.77	263.60	218.075	0.028	50	915	0.05	3.1	-0.561
41025TO42007	8	41025	263.60	261.91	292.829	0.006	50	413	0.12	1.8	-0.511
41026TO41028	8	41026	299.70	288.62	281.858	0.039	-	1,078	-	0.0	-0.667
41027TO41028	8	41027	292.86	288.62	206.09	0.021	-	780	-	0.0	-0.667
41028TO41029	8	41028	288.62	284.94	119.043	0.031	-	956	-	0.0	-0.667
41029TO41030	8	41029	284.94	279.55	150.174	0.036	-	1,030	-	0.0	-0.667
41030TO41023	8	41030	279.45	271.34	173.263	0.047	-	1,177	-	0.0	-0.667
41031TO41030	8	41031	281.83	279.55	159.642	0.014	-	650	-	0.0	-0.667
41032TO41033	8	41032	293.09	289.95	174.13	0.018	18	730	0.02	2.0	-0.595
41033TO41034	8	41033	289.95	288.22	206.45	0.008	18	498	0.04	1.5	-0.58
41034TO41035	8	41034	288.22	286.91	73.629	0.018	18	725	0.02	2.0	-0.595
41035TO41036	8	41035	286.91	278.53	185	0.045	18	1,157	0.02	2.7	-0.609

Bothell Sewer Comprehensive Plan
Sewer Model Results (Buildout Scenario)

Pipe ID	Diameter (in.)	Upstream MH	From Invert (ft)	To Invert (ft)	Length (ft)	Slope	Max Flow (gpm)	Capacity (gpm)	Max q/Q	Max Velocity (fps)	Upstream Max. Surcharge (ft)
41036TO41037	8	41036	278.53	268.36	181.267	0.056	18	1,288	0.01	2.9	-0.612
41037TO42006	8	41037	268.36	260.39	192.941	0.041	18	1,105	0.02	2.6	-0.608
41038TO41037	8	41038	273.03	268.36	212.867	0.022	-	805	-	0.0	-0.667
41039TO41038	8	41039	277.56	273.03	102.414	0.044	-	1,144	-	0.0	-0.667
41040TO41034	8	41040	254.48	248.87	245.582	0.023	-	822	-	0.0	-0.667
41041TO41042	8	41041	248.87	235.09	338.587	0.041	9	1,097	0.01	2.1	-0.624
41042TO41044	8	41042	235.09	217.15	164.966	0.109	9	1,793	0.01	3.0	-0.633
41043TO41042	8	41043	242.08	235.09	264.531	0.026	-	884	-	0.0	-0.667
41044TO42066	8	41044	217.15	211.42	182.87	0.031	9	963	0.01	1.9	-0.621
41048TO41049	8	41048	290.52	282.89	248.012	0.031	28	954	0.03	2.7	-0.588
41049TO41050	8	41049	282.89	271.07	129	0.092	28	1,646	0.02	4.0	-0.606
41050TO41058	8	41050	270.97	268.10	282.024	0.01	47	549	0.09	2.1	-0.535
41051TO41052	8	41051	292.62	287.06	93	0.06	-	1,330	-	0.0	-0.667
41052TO41053	8	41052	286.96	284.00	134	0.022	-	808	-	0.0	-0.667
41053TO41054	8	41053	283.90	278.32	97.408	0.057	-	1,302	-	0.0	-0.667
41054TO41056	8	41054	278.32	273.20	291	0.018	-	721	-	0.0	-0.667
41056TO41050	8	41056	273.20	271.17	115	0.018	-	723	-	0.0	-0.667
41057TO41050	8	41057	279.42	271.17	117	0.071	-	1,444	-	0.0	-0.667
41058TO41059	8	41058	268.04	266.65	116.03	0.012	47	595	0.08	2.3	-0.54
41059TO41060	8	41059	266.60	263.27	278	0.012	47	595	0.08	2.3	-0.54
41060TO41061	8	41060	263.22	261.62	138.718	0.012	47	584	0.08	2.2	-0.539
41061TO42093	8	41061	261.57	259.25	193.393	0.012	47	596	0.08	2.3	-0.54
41090TO41019	8	41019	288.94	284.30	162.835	0.028	-	918	-	0.0	-0.667
42001TO42002	8	42001	268.86	255.76	145.2	0.09	-	1,633	-	0.0	-0.667
42002TO42003	8	42002	255.66	248.47	223.48	0.032	-	975	-	0.0	-0.667
42003TO42011	8	42003	248.47	246.92	228.248	0.007	67	448	0.15	2.1	-0.492
42004TO42003	8	42004	249.60	248.47	113.741	0.01	67	542	0.12	2.4	-0.508
42005TO42003	8	42005	250.69	249.60	162.638	0.007	-	445	-	0.0	-0.667
42006TO42004	8	42006	260.39	249.60	171.953	0.063	67	1,362	0.05	4.5	-0.566
42007TO42006	8	42007	261.91	260.39	253.858	0.006	50	421	0.12	1.8	-0.512
42011TO42012	8	42011	246.92	243.21	134.116	0.028	67	904	0.07	3.4	-0.544
42012TO42016	8	42012	243.21	241.81	169.915	0.008	128	494	0.26	2.6	-0.435

Bothell Sewer Comprehensive Plan
Sewer Model Results (Buildout Scenario)

Pipe ID	Diameter (in.)	Upstream MH	From Invert (ft)	To Invert (ft)	Length (ft)	Slope	Max Flow (gpm)	Capacity (gpm)	Max q/Q	Max Velocity (fps)	Upstream Max. Surcharge (ft)
42013TO42012	8	42013	250.09	243.21	188.394	0.037	61	1,039	0.06	3.6	-0.558
42014TO42013	8	42014	252.45	250.09	109.47	0.022	61	798	0.08	3.0	-0.542
42015TO42014	8	42015	256.99	252.45	183.044	0.025	61	856	0.07	3.2	-0.547
42016TO42017	8	42016	241.81	228.12	318.193	0.043	128	1,128	0.11	4.8	-0.515
42017TO42020	8	42017	228.12	223.62	245.074	0.018	128	737	0.17	3.5	-0.479
42018TO42017	8	42018	232.62	228.12	93	0.048	-	1,196	-	0.0	-0.667
42019TO42018	8	42019	249.62	232.62	95	0.179	-	2,300	-	0.0	-0.667
42020TO42028	8	42020	223.62	212.45	212.065	0.053	128	1,248	0.10	5.1	-0.523
42021TO42020	8	42021	235.53	223.62	395.506	0.03	-	944	-	0.0	-0.667
42022TO42021	8	42022	244.68	235.53	92.536	0.099	-	1,710	-	0.0	-0.667
42023TO42024	8	42023	213.62	174.22	242.286	0.163	-	2,193	-	0.0	-0.667
42024TO42026	8	42024	174.12	172.91	170.014	0.007	11	459	0.02	1.2	-0.597
42025TO42024	8	42025	210.56	174.22	217.962	0.167	-	2,220	-	0.0	-0.667
42026TO42034	8	42026	172.91	158.87	248.902	0.056	143	1,292	0.11	5.4	-0.517
42027TO42026	8	42027	190.34	172.91	245.978	0.071	133	1,448	0.09	5.8	-0.53
42028TO42027	8	42028	212.42	190.34	218.447	0.101	133	1,729	0.08	6.5	-0.542
42029TO42028	8	42029	223.86	212.45	282.886	0.04	5	1,092	0.00	1.8	-0.634
42030TO42029	8	42030	250.12	223.86	295.175	0.089	5	1,622	0.00	2.3	-0.639
42032TO42030	8	42032	252.62	250.22	395.684	0.006	5	424	0.01	0.9	-0.615
42034TO42035	8	42034	158.87	156.48	169.343	0.014	143	646	0.22	3.3	-0.454
42035TO94005A	8	42035	156.48	155.11	166.914	0.008	143	493	0.29	2.7	-0.421
42036TO42035	8	42036	169.92	156.48	145.36	0.092	-	1,654	-	0.0	-0.667
42037TO42036	8	42037	209.54	169.92	340.347	0.116	-	1,855	-	0.0	-0.667
42039TO42040	8	42039	131.82	90.52	158	0.261	171	2,780	0.06	9.8	-0.555
42040L1	8	42040	90.52	36.85	351	0.153	171	2,126	0.08	8.1	-0.539
42045TO94005A	8	42045	160.39	155.11	32.896	0.161	28	2,179	0.01	4.8	-0.614
42046TO42045	8	42046	204.53	160.39	320.238	0.138	28	2,019	0.01	4.6	-0.612
42047TO42046	8	42047	207.34	205.34	225.944	0.009	28	512	0.05	1.7	-0.561
42048TO42047	8	42048	209.14	207.43	228.359	0.007	-	471	-	0.0	-0.667
42049TO42048	8	42049	210.62	209.24	129.841	0.011	-	561	-	0.0	-0.667
42050TO42047	8	42050	207.67	207.43	40.978	0.006	28	416	0.07	1.5	-0.55
42051TO42050	8	42051	210.53	207.67	179.315	0.016	-	687	-	0.0	-0.667

Bothell Sewer Comprehensive Plan
Sewer Model Results (Buildout Scenario)

Pipe ID	Diameter (in.)	Upstream MH	From Invert (ft)	To Invert (ft)	Length (ft)	Slope	Max Flow (gpm)	Capacity (gpm)	Max q/Q	Max Velocity (fps)	Upstream Max. Surcharge (ft)
42052TO42050	8	42052	213.85	207.67	165.913	0.037	28	1,050	0.03	2.9	-0.592
42053TO42052	8	42053	224.82	213.85	276	0.04	-	1,084	-	0.0	-0.667
42054TO42052	8	42054	234.22	213.85	157.907	0.129	28	1,953	0.01	4.5	-0.611
42055TO42054	8	42055	238.84	234.22	128.822	0.036	-	1,030	-	0.0	-0.667
42056TO42054	8	42056	238.76	234.32	248.139	0.018	28	727	0.04	2.2	-0.578
42057TO42056	8	42057	241.80	238.76	259.317	0.012	28	589	0.05	1.9	-0.568
42058TO42057	8	42058	246.55	241.80	250.602	0.019	-	749	-	0.0	-0.667
42059TO42060	8	42059	217.44	205.08	131.187	0.094	-	1,669	-	0.0	-0.667
42060TO42062	8	42060	205.08	199.76	125.083	0.043	16	1,121	0.01	2.6	-0.611
42061TO42060	8	42061	210.52	205.08	309.995	0.018	-	720	-	0.0	-0.667
42062TO42071	8	42062	199.76	166.02	298.896	0.113	16	1,827	0.01	3.6	-0.622
42063TO42062	8	42063	205.82	199.86	115.4	0.052	-	1,236	-	0.0	-0.667
42064TO42063	8	42064	211.86	205.92	173.245	0.034	-	1,007	-	0.0	-0.667
42065TO42064	8	42065	214.39	211.86	241.713	0.01	-	556	-	0.0	-0.667
42066TO42067	8	42066	211.42	206.12	392.996	0.013	39	632	0.06	2.2	-0.554
42067TO42068	8	42067	206.02	202.82	99.572	0.032	39	975	0.04	3.0	-0.576
42068TO42069	8	42068	202.82	184.12	180.566	0.104	39	1,750	0.02	4.6	-0.598
42069TO42070	8	42069	184.12	169.06	166.342	0.091	39	1,636	0.02	4.4	-0.596
42070TO42071	8	42070	169.06	166.02	114.097	0.027	39	888	0.04	2.8	-0.571
42071TO42072	8	42071	166.02	150.24	267.678	0.059	55	1,320	0.04	4.2	-0.574
42072TO42073	8	42072	150.24	135.22	143	0.105	55	1,762	0.03	5.1	-0.586
42073TO1599	8	42073	135.22	134.54	37.155	0.018	55	736	0.07	2.8	-0.543
42073TO42074	8	42074	135.22	131.12	8.606	0.476	-	3,753	-	0.0	-0.543
42076TO42077	8	42076	228.61	218.91	225.555	0.043	13	1,128	0.01	2.4	-0.616
42077TO42078	8	42077	218.91	208.62	210	0.049	13	1,204	0.01	2.5	-0.617
42078TO42079	8	42078	208.62	206.98	200	0.008	13	492	0.03	1.4	-0.591
42079TO42080	8	42079	206.92	197.99	261.111	0.034	13	1,006	0.01	2.2	-0.613
42080TO91002	8	42080	197.99	171.09	287.154	0.094	19	1,664	0.01	3.6	-0.616
42082TO42083	8	42082	221.12	219.72	120.967	0.012	6	585	0.01	1.2	-0.619
42083TO42084	8	42083	219.62	200.94	253.938	0.074	6	1,475	0.00	2.3	-0.636
42084TO42080	8	42084	200.94	197.99	286.651	0.01	6	552	0.01	1.2	-0.617
42085TO42076	8	42085	231.92	228.61	101.548	0.033	13	982	0.01	2.2	-0.612

Bothell Sewer Comprehensive Plan
Sewer Model Results (Buildout Scenario)

Pipe ID	Diameter (in.)	Upstream MH	From Invert (ft)	To Invert (ft)	Length (ft)	Slope	Max Flow (gpm)	Capacity (gpm)	Max q/Q	Max Velocity (fps)	Upstream Max. Surcharge (ft)
42086TO42087	8	42086	207.95	203.42	129.523	0.035	-	1,017	-	0.0	-0.667
42087TO42088	8	42087	203.42	196.62	189.296	0.036	30	1,031	0.03	2.9	-0.588
42088TO42089	8	42088	196.52	194.60	175.3	0.011	30	569	0.05	1.9	-0.562
42089TO42090	8	42089	194.50	187.72	152.293	0.045	30	1,147	0.03	3.1	-0.592
42090TO42091	8	42090	187.62	184.72	308.873	0.009	30	527	0.06	1.8	-0.559
42091TO91009	8	42091	184.62	180.62	269.478	0.015	30	663	0.05	2.1	-0.57
42093TO42094	8	42093	259.20	257.42	148.642	0.012	47	595	0.08	2.3	-0.54
42094TO42015	8	42094	257.37	256.99	15.568	0.024	47	850	0.06	2.9	-0.56
43001TO43008	15	43001	18.96	18.61	384.459	0.001	412	877	0.47	1.6	-0.459
43002TO43001	15	43002	19.11	18.93	268.114	0.001	208	753	0.28	1.2	-0.596
43003TO43002	16	43003	19.36	19.16	133	0.002	208	1,339	0.16	1.6	-0.924
43004TO43003	16	43004	19.74	19.41	233.005	0.001	208	1,299	0.16	1.5	-0.974
43005TO43004	16	43005	20.13	19.79	234.263	0.001	208	1,315	0.16	1.5	-0.976
43006TO43005	16	43006	20.62	20.18	310	0.001	208	1,301	0.16	1.5	-0.973
43007TO43006	8	43007	29.76	20.72	371.434	0.024	61	848	0.07	3.1	-0.546
43008TO43009	15	43008	18.61	18.33	311.276	0.001	412	872	0.47	1.6	-0.186
43009TO43010	15	43009	18.33	18.29	356.706	0	412	308	1.34	0.7	0.031
43010TO43011	15	43010	18.29	17.85	293	0.002	412	1,127	0.37	1.9	-0.729
43011TO43012	15	43011	17.85	17.41	332	0.001	412	1,058	0.39	1.8	-0.711
43012TO43013	15	43012	17.36	17.09	211.581	0.001	412	1,038	0.40	1.8	-0.705
43013TO43014	15	43013	17.04	16.64	376.963	0.001	412	947	0.44	1.7	-0.675
43014TO43038	15	43014	16.59	15.94	238.749	0.003	569	1,518	0.38	2.6	-0.721
43015TO43014	12	43015	16.83	16.59	88	0.003	158	836	0.19	1.8	-0.707
43016TO43015	12	43016	17.58	16.83	274.688	0.003	158	837	0.19	1.8	-0.708
43017TO43016	12	43017	18.66	17.58	394.197	0.003	158	837	0.19	1.8	-0.708
43018TO43017	12	43018	19.63	18.66	357.145	0.003	158	837	0.19	1.8	-0.707
43019TO43018	12	43019	20.30	19.63	399.984	0.002	158	656	0.24	1.5	-0.668
43020TO43021	12	43020	25.08	24.61	242.102	0.002	158	706	0.22	1.6	-0.679
43021TO43022	12	43021	24.61	23.86	305.99	0.002	158	794	0.20	1.8	-0.698
43022TO43023	12	43022	23.82	23.11	290.818	0.002	158	792	0.20	1.8	-0.698
43023TO43024	12	43023	23.06	22.29	316.36	0.002	158	791	0.20	1.8	-0.698
43024TO43025	12	43024	22.24	21.47	315.025	0.002	158	793	0.20	1.8	-0.698

Bothell Sewer Comprehensive Plan
Sewer Model Results (Buildout Scenario)

Pipe ID	Diameter (in.)	Upstream MH	From Invert (ft)	To Invert (ft)	Length (ft)	Slope	Max Flow (gpm)	Capacity (gpm)	Max q/Q	Max Velocity (fps)	Upstream Max. Surcharge (ft)
43025TO43026	12	43025	21.42	20.91	210.367	0.002	158	789	0.20	1.7	-0.698
43026TO43019	12	43026	20.76	20.40	208.696	0.002	158	666	0.24	1.5	-0.67
43027TO43030	36	43027	7.08	6.47	604	0.001	129	9,492	0.01	1.1	-2.756
43029TO43039	8	43029	17.62	17.16	17.708	0.026	-	876	-	0.0	-0.667
43030TO43041	36	43030	6.37	6.00	370	0.001	1,593	9,492	0.17	2.2	-2.169
43031TO43030	36	43031	6.66	6.47	188	0.001	896	9,492	0.09	1.9	-2.377
43038TO43039	15	43038	15.94	15.30	236.122	0.003	569	1,518	0.38	2.6	-0.721
43039TO43040	15	43039	15.30	14.93	133.27	0.003	569	1,517	0.38	2.6	-0.721
43040TO43030	15	43040	14.93	14.91	9.069	0.003	569	1,526	0.37	2.6	-0.723
43041TO52012	36	43041	5.90	4.81	1090	0.001	1,593	9,492	0.17	2.2	-2.169
44002TO44003	10	44002	38.62	36.61	400	0.005	-	699	-	0.0	-0.833
44003TO44004	12	44003	36.56	35.66	177.547	0.005	35	1,142	0.03	1.5	-0.881
44004TO44005	12	44004	35.61	33.90	340.75	0.005	35	1,136	0.03	1.4	-0.88
44005TO44006	12	44005	33.85	33.19	160	0.004	35	1,030	0.03	1.4	-0.875
44006TO44007	12	44006	33.09	27.38	342.345	0.017	58	2,071	0.03	2.6	-0.885
44007TO44008	12	44007	27.38	27.02	46.887	0.008	58	1,405	0.04	2.0	-0.861
44008TO44009	12	44008	26.66	25.68	250.126	0.004	124	1,004	0.12	1.9	-0.762
44009TO44010	12	44009	25.68	25.21	308.959	0.002	124	625	0.20	1.4	-0.698
44010TO44011	12	44010	25.21	22.70	381.3	0.007	124	1,301	0.10	2.3	-0.791
44011TO44012	12	44011	22.70	21.90	343.534	0.002	147	774	0.19	1.7	-0.705
44012TO44013	12	44012	21.90	21.77	213.967	0.001	147	395	0.37	1.0	-0.578
44013TO44014	12	44013	21.77	21.32	24.938	0.018	147	2,154	0.07	3.5	-0.823
44014TO43006	12	44014	21.22	20.72	101.435	0.005	147	1,126	0.13	2.2	-0.756
44015TO44016	12	44015	19.46	19.10	136.77	0.003	98	823	0.12	1.6	-0.7
44016TO43001	12	44016	19.05	18.93	120.608	0.001	98	506	0.19	1.1	-0.295
50348TO53049	8	53048	177.42	174.01	146.172	0.023	17	831	0.02	2.1	-0.6
51001TO51002	36	51001	13.62	13.54	80	0.001	-	9,492	-	0.0	-3
51002TO51004	36	51002	13.44	13.38	60.5	0.001	-	9,453	-	0.0	-3
51003TO54002	8	54003	301.31	288.02	234.714	0.057	13	1,294	0.01	2.6	-0.62
51004TO51005	36	51004	13.28	12.53	752.6	0.001	-	9,495	-	0.0	-3
51005TO51006	36	51005	12.43	12.03	400.7	0.001	-	9,496	-	0.0	-3
51006TO51007	36	51006	11.93	11.57	353.3	0.001	-	9,488	-	0.0	-3

Bothell Sewer Comprehensive Plan
Sewer Model Results (Buildout Scenario)

Pipe ID	Diameter (in.)	Upstream MH	From Invert (ft)	To Invert (ft)	Length (ft)	Slope	Max Flow (gpm)	Capacity (gpm)	Max q/Q	Max Velocity (fps)	Upstream Max. Surcharge (ft)
51007TO51008	36	51007	11.47	11.16	313	0.001	-	9,492	-	0.0	-3
51008TO51009	36	51008	11.06	10.61	449	0.001	-	9,492	-	0.0	-3
51009TO51010	36	51009	10.51	10.23	278	0.001	129	9,492	0.01	1.1	-2.755
51010TO51011	36	51010	10.13	9.89	242	0.001	129	9,492	0.01	1.1	-2.755
51011TO51013	36	51011	9.79	9.49	297	0.001	129	9,492	0.01	1.1	-2.755
51016TO51031	12	51016	22.15	21.21	355	0.003	98	825	0.12	1.6	-0.768
51031TO51032	12	51031	21.16	20.41	280	0.003	98	830	0.12	1.6	-0.768
51032TO44015	12	51032	20.36	19.51	317.663	0.003	98	829	0.12	1.6	-0.769
51034TO51035	8	51034	65.80	64.12	187.126	0.009	-	515	-	0.0	-0.667
51035TO51036	8	51035	64.12	61.40	340.033	0.008	-	486	-	0.0	-0.667
51036TO51037	8	51036	61.20	58.99	315.28	0.007	-	455	-	0.0	-0.667
51037TO51038	8	51037	58.89	45.84	452.542	0.029	-	923	-	0.0	-0.667
51038TO51009	8	51038	45.64	21.03	525.297	0.047	129	1,177	0.11	4.9	-0.517
51039TO51038	8	51039	83.28	45.84	244.932	0.153	-	2,126	-	0.0	-0.667
51040TO51039	8	51040	110.10	83.28	181.838	0.147	-	2,088	-	0.0	-0.667
51041TO51040	8	51041	128.27	110.20	127.379	0.142	-	2,048	-	0.0	-0.667
51042TO51041	8	51042	163.04	128.47	243.272	0.142	-	2,050	-	0.0	-0.667
51043TO51042	8	51043	175.60	163.04	136.98	0.092	-	1,647	-	0.0	-0.667
51046TO51042	8	51046	190.94	163.04	198.81	0.14	-	2,037	-	0.0	-0.667
51048TO51046	6	51048	196.64	190.94	256.336	0.022	-	377	-	0.0	-0.5
51049TO51046	8	51049	210.20	190.94	143.738	0.134	-	1,991	-	0.0	-0.667
51050TO51049	8	51050	210.99	210.40	79.352	0.007	-	469	-	0.0	-0.667
51051TO51049	8	51051	229.07	210.40	121.975	0.153	-	2,128	-	0.0	-0.667
51052TO51051	8	51052	260.63	229.17	203.378	0.155	-	2,139	-	0.0	-0.667
51053TO51052	8	51053	267.63	260.63	80.049	0.087	-	1,608	-	0.0	-0.667
51054TO51052	8	51054	269.27	260.63	80.315	0.108	-	1,784	-	0.0	-0.667
51055TO5156	8	51055	274.93	266.43	87.174	0.098	-	1,698	-	0.0	-0.667
51056TO51057	8	51056	266.33	240.39	194.915	0.133	-	1,984	-	0.0	-0.667
51057TO51060	8	51057	240.19	219.92	155.973	0.13	-	1,960	-	0.0	-0.667
51058TO51057	8	51058	252.82	240.19	148.851	0.085	-	1,584	-	0.0	-0.667
51060TO51062	8	51060	219.75	201.33	125.19	0.147	-	2,086	-	0.0	-0.667
51062TO51063	8	51062	201.33	187.68	107.952	0.126	-	1,934	-	0.0	-0.667

Bothell Sewer Comprehensive Plan
Sewer Model Results (Buildout Scenario)

Pipe ID	Diameter (in.)	Upstream MH	From Invert (ft)	To Invert (ft)	Length (ft)	Slope	Max Flow (gpm)	Capacity (gpm)	Max q/Q	Max Velocity (fps)	Upstream Max. Surcharge (ft)
51063TO51064	8	51063	187.58	156.72	132.925	0.232	-	2,620	-	0.0	-0.667
51064TO51041	8	51064	156.72	128.27	136.273	0.209	-	2,485	-	0.0	-0.667
51067TO51063	8	51067	199.64	187.78	206.78	0.057	-	1,302	-	0.0	-0.667
51070TO51067	8	51070	210.25	199.91	133.485	0.077	-	1,514	-	0.0	-0.667
51071TO51070	6	51071	221.74	210.35	136.427	0.083	-	730	-	0.0	-0.5
52001TO52002	8	52001	134.69	122.62	331.568	0.036	-	1,038	-	0.0	-0.667
52002TO53107	8	52002	122.52	120.72	247.456	0.007	-	464	-	0.0	-0.667
52003TO2103	12	52003	59.36	54.43	90.433	0.055	-	3,744	-	0.0	-1
52004TO52003	12	52004	73.72	59.36	350.359	0.041	-	3,246	-	0.0	-1
52005TO52004	12	52005	79.27	73.72	375	0.015	-	1,951	-	0.0	-1
52006TO52007	8	52006	74.84	69.22	279	0.02	364	772	0.47	4.9	-0.37
52007TO52008	8	52007	69.12	66.05	69	0.044	363	1,147	0.32	6.5	-0.428
52008TO52009	8	52008	66.05	40.12	330	0.079	362	1,524	0.24	8.0	-0.461
52009TO52010	12	52009	22.18	19.62	20	0.128	362	5,736	0.06	9.1	-0.841
52010TO84024	36	52010	3.97	1.37	2595	0.001	1,937	9,492	0.20	2.3	-2.091
52011TO52010	36	52011	4.47	4.07	400	0.001	1,593	9,492	0.17	2.2	-2.169
52012TO52011	36	52012	4.71	4.57	145	0.001	1,593	9,492	0.17	2.2	-2.169
52013TO52015	36	52013	9.39	8.80	591	0.001	129	9,492	0.01	1.1	-2.756
52015TO52018	36	52015	8.70	8.43	268	0.001	129	9,492	0.01	1.1	-2.756
52018TO52020	36	52018	8.33	7.80	533	0.001	129	9,492	0.01	1.1	-2.756
52020TO43027	36	52020	7.70	7.18	525	0.001	129	9,492	0.01	1.1	-2.756
53003TO53004	8	53003	140.72	132.24	86	0.099	8	1,708	0.00	2.8	-0.634
53004TO53005	8	53004	132.24	126.32	252	0.023	8	833	0.01	1.7	-0.621
53005TO53006	8	53005	126.32	122.40	135	0.029	8	927	0.01	1.8	-0.623
53005TO53054	8	53055	149.61	135.31	173.16	0.083	51	1,563	0.03	4.6	-0.584
53006ATO53093	8	53006A	231.91	206.61	339.55	0.075	-	1,484	-	0.0	-0.667
53006TO53007	8	53006	122.40	112.23	175.65	0.058	25	1,309	0.02	3.2	-0.603
53007TO53008	8	53007	112.23	110.81	164.874	0.009	80	505	0.16	2.4	-0.487
53008TO53009	8	53008	110.81	109.53	172.311	0.007	89	469	0.19	2.3	-0.47
53009TO53041	8	53009	109.53	95.72	59.421	0.232	89	2,622	0.03	7.8	-0.583
53010TO53009	8	53010	111.06	109.53	176.731	0.009	-	506	-	0.0	-0.667
53011TO62047	8	53011	117.30	117.13	229.17	0.001	-	148	-	0.0	-0.64

Bothell Sewer Comprehensive Plan
Sewer Model Results (Buildout Scenario)

Pipe ID	Diameter (in.)	Upstream MH	From Invert (ft)	To Invert (ft)	Length (ft)	Slope	Max Flow (gpm)	Capacity (gpm)	Max q/Q	Max Velocity (fps)	Upstream Max. Surcharge (ft)
53013TO53014	8	53013	101.58	101.32	67	0.004	13	339	0.04	1.0	-0.577
53014TO62052	8	53014	101.32	97.72	89.452	0.04	13	1,091	0.01	2.4	-0.615
53015TO53014	8	53015	101.62	101.32	143	0.002	-	249	-	0.0	-0.667
53016TO53006	8	53016	137.72	122.40	400	0.038	-	1,064	-	0.0	-0.667
53017TO53052	8	53017	129.31	111.21	250	0.072	9	1,463	0.01	2.6	-0.63
53018TO53017	8	53018	147.97	129.41	248.829	0.075	9	1,485	0.01	2.6	-0.63
53019TO53020	8	53019	113.62	109.18	90.5	0.049	-	1,204	-	0.0	-0.667
53020TO53024	8	53020	109.08	100.63	171.731	0.049	-	1,206	-	0.0	-0.667
53022TO53024	8	53022	108.24	100.63	87.263	0.087	17	1,606	0.01	3.4	-0.618
53023TO53022	8	53023	138.72	108.34	345	0.088	17	1,614	0.01	3.4	-0.618
53024TO53025	8	53024	100.53	84.13	329.351	0.05	17	1,213	0.01	2.8	-0.611
53025TO53026	8	53025	84.13	77.00	88.286	0.081	30	1,545	0.02	3.9	-0.602
53026TO53027	8	53026	77.00	69.22	214.088	0.036	55	1,037	0.05	3.5	-0.563
53027TO53028	8	53027	69.22	65.59	210.123	0.017	55	715	0.08	2.7	-0.542
53028TO53029	8	53028	65.59	65.15	201.108	0.002	55	254	0.21	1.3	-0.457
53029TO53030	8	53029	65.05	64.82	88	0.003	164	278	0.59	1.8	-0.299
53030TO62099	8	53030	64.82	52.82	305.196	0.039	164	1,078	0.15	5.0	-0.491
53031TO53029	8	53031	71.92	65.05	142.45	0.048	110	1,194	0.09	4.8	-0.53
53032TO53031	8	53032	80.54	71.92	269.512	0.032	110	973	0.11	4.1	-0.516
53035TO62098	8	53035	68.12	63.02	174.865	0.029	16	929	0.02	2.3	-0.605
53036TO53035	8	53036	87.69	68.12	236.157	0.083	16	1,565	0.01	3.3	-0.618
53038TO53032	8	53038	82.85	80.64	141.498	0.016	110	680	0.16	3.2	-0.486
53039TO53038	8	53039	88.71	82.95	312.438	0.018	110	738	0.15	3.4	-0.493
53040TO53039	8	53040	89.29	88.81	26.124	0.018	110	737	0.15	3.4	-0.493
53041TO53042	8	53041	95.62	92.30	180	0.018	89	739	0.12	3.2	-0.51
53042TO53040	8	53042	92.20	89.39	152.408	0.018	110	738	0.15	3.4	-0.493
53043TO53042	8	53043	125.72	92.30	375	0.089	20	1,623	0.01	3.6	-0.614
53044TO53043	8	53044	155.46	125.82	316	0.094	20	1,665	0.01	3.6	-0.615
53045TO53044	8	53045	164.62	155.46	166	0.055	20	1,277	0.02	3.0	-0.608
53046TO53045	8	53046	171.38	164.72	368	0.018	20	732	0.03	2.0	-0.59
53047TO53046	8	53047	187.29	177.18	364.062	0.028	20	906	0.02	2.4	-0.598
53049TO53050	8	53049	174.01	163.64	164	0.063	17	1,367	0.01	3.0	-0.614

Bothell Sewer Comprehensive Plan
Sewer Model Results (Buildout Scenario)

Pipe ID	Diameter (in.)	Upstream MH	From Invert (ft)	To Invert (ft)	Length (ft)	Slope	Max Flow (gpm)	Capacity (gpm)	Max q/Q	Max Velocity (fps)	Upstream Max. Surcharge (ft)
53050TO53051	8	53050	163.64	147.52	441.632	0.037	17	1,039	0.02	2.5	-0.607
53051TO53023	8	53051	147.52	138.72	168.036	0.052	17	1,244	0.01	2.8	-0.612
53052TO53008	8	53052	111.11	110.81	241.901	0.001	9	192	0.05	0.6	-0.569
53053TO53007	8	53053	118.92	112.23	219.243	0.031	56	950	0.06	3.3	-0.557
53054TO53053	8	53054	135.31	118.92	260	0.063	56	1,365	0.04	4.3	-0.575
53056TO53055	8	53056	166.10	149.61	351.019	0.047	19	1,179	0.02	2.8	-0.607
53057TO53056	8	53057	188.66	166.50	293.762	0.075	19	1,494	0.01	3.3	-0.614
53059TO53057	8	53059	202.32	188.66	373	0.037	9	1,041	0.01	2.0	-0.623
53060TO2125	8	53060	114.48	110.47	50	0.08	13	1,540	0.01	3.0	-0.623
53062TO84004	8	53062	81.43	80.58	159.028	0.005	13	398	0.03	1.2	-0.585
53063TO53062	8	53063	87.62	81.53	232.11	0.026	13	881	0.01	2.0	-0.611
53064TO53060	8	53064	130.22	114.53	162.296	0.097	13	1,691	0.01	3.2	-0.625
53065TO53064	8	53065	131.22	130.22	154.5	0.006	13	437	0.03	1.3	-0.587
53066TO53065	8	53066	132.92	131.22	257	0.007	13	442	0.03	1.3	-0.588
53067TO53066	8	53067	143.62	133.02	220.847	0.048	13	1,191	0.01	2.5	-0.617
53068TO53054	8	53068	170.52	135.31	366	0.096	4	1,687	0.00	2.3	-0.641
53069TO53055	8	53069	164.40	149.61	165.787	0.089	32	1,624	0.02	4.1	-0.602
53070TO50369	8	53070	190.77	164.40	261.357	0.101	32	1,727	0.02	4.3	-0.604
53071TO53070	8	53071	191.92	190.77	45	0.026	6	869	0.01	1.6	-0.627
53072TO50371	8	53072	201.20	192.12	304.763	0.03	6	939	0.01	1.7	-0.629
53073TO53070	8	53073	197.65	190.87	94	0.072	26	1,460	0.02	3.6	-0.605
53074TO53073	8	53074	223.35	197.75	340	0.075	26	1,492	0.02	3.6	-0.605
53075TO53074	8	53075	233.24	223.45	130	0.075	20	1,492	0.01	3.3	-0.613
53076TO53075	8	53076	236.62	233.34	77.491	0.042	-	1,119	-	0.0	-0.667
53077TO53075	8	53077	234.61	233.34	16.794	0.076	20	1,495	0.01	3.3	-0.613
53078TO53077	8	53078	256.96	234.61	372.952	0.06	14	1,331	0.01	2.8	-0.619
53079TO53078	8	53079	270.66	256.96	237.151	0.058	14	1,307	0.01	2.7	-0.618
53080TO53079	8	53080	288.12	270.66	251.247	0.069	-	1,434	-	0.0	-0.667
53081TO53082	8	53081	286.07	276.32	204.167	0.048	-	1,188	-	0.0	-0.667
53082TO53083	8	53082	276.32	259.19	399.587	0.043	5	1,126	0.00	1.8	-0.636
53083TO53084	8	53083	259.19	246.62	202.277	0.062	180	1,356	0.13	6.0	-0.513
53084TO53098	8	53084	246.62	227.62	346.294	0.055	188	1,274	0.15	5.8	-0.502

Bothell Sewer Comprehensive Plan
Sewer Model Results (Buildout Scenario)

Pipe ID	Diameter (in.)	Upstream MH	From Invert (ft)	To Invert (ft)	Length (ft)	Slope	Max Flow (gpm)	Capacity (gpm)	Max q/Q	Max Velocity (fps)	Upstream Max. Surcharge (ft)
53085TO53084	8	53085	252.08	246.62	95.511	0.057	9	1,300	0.01	2.4	-0.627
53086TO53085	8	53086	261.14	252.08	151.046	0.06	9	1,332	0.01	2.4	-0.627
53087TO53086	8	53087	274.20	261.14	401.678	0.033	5	981	0.00	1.6	-0.633
53088TO53078	8	53088	285.36	256.96	246.899	0.115	-	1,844	-	0.0	-0.667
53089TO53077	8	53089	246.19	234.61	175.528	0.066	6	1,397	0.00	2.2	-0.635
53090TO53089	8	53090	254.69	246.19	204.517	0.042	-	1,109	-	0.0	-0.667
53091TO53097	8	53091	257.53	248.06	299.083	0.032	5	968	0.01	1.7	-0.631
53093TO53094	8	53093	206.51	202.12	295.303	0.015	-	663	-	0.0	-0.667
53094TO53104	8	53094	202.12	192.65	69.77	0.136	4	2,003	0.00	2.6	-0.644
53095TO53094	8	53095	220.09	202.12	198.848	0.09	4	1,635	0.00	2.2	-0.642
53096TO53095	8	53096	233.62	220.09	201	0.067	4	1,411	0.00	2.0	-0.64
53097TO53098	8	53097	247.62	227.62	292.508	0.068	9	1,422	0.01	2.6	-0.628
53098TO53099	8	53098	227.52	215.14	241.196	0.051	197	1,232	0.16	5.8	-0.499
53099TO53100	8	53099	215.04	188.66	400	0.066	201	1,397	0.14	6.3	-0.515
53100TO53101	8	53100	188.56	178.80	148	0.066	200	1,396	0.14	6.3	-0.518
53101TO53102	8	53101	178.70	158.39	311	0.065	197	1,390	0.14	6.3	-0.519
53102TO53105	8	53102	158.39	133.43	167.398	0.149	241	2,100	0.11	8.9	-0.531
53103TO53102	8	53103	163.04	158.39	435.61	0.011	44	562	0.08	2.1	-0.54
53104TO53103	8	53104	192.65	163.04	244.852	0.121	44	1,891	0.02	5.0	-0.596
53105TO53107	8	53105	133.43	120.63	164.159	0.078	240	1,518	0.16	7.1	-0.505
53106TO53105	8	53106	155.22	133.43	267	0.082	-	1,554	-	0.0	-0.667
53107TO53111	8	53107	120.63	93.82	344	0.078	239	1,518	0.16	7.1	-0.501
53108TO53107	8	53108	150.51	120.63	439.046	0.068	-	1,419	-	0.0	-0.667
53109TO53108	8	53109	158.72	150.51	110.5	0.074	-	1,482	-	0.0	-0.667
53110TO53109	8	53110	173.32	158.72	117.5	0.124	-	1,917	-	0.0	-0.667
53111TO53116	8	53111	93.82	85.62	245.227	0.033	239	994	0.24	5.2	-0.459
53112TO53111	8	53112	98.42	93.82	256	0.018	-	729	-	0.0	-0.667
53116TO53117	8	53116	84.72	83.53	73.981	0.016	365	690	0.53	4.5	-1.45
53116TO84048	8	53116	85.82	84.82	200.565	0.005	-	384	-	0.0	-1.45
53117TO52006	8	53117	83.53	74.94	292.407	0.029	365	932	0.39	5.6	-0.399
53121TO2098	8	53121	85.87	85.09	84.352	0.009	-	523	-	0.0	-0.667
53122TO53121	8	53122	93.02	85.97	181.17	0.039	-	1,073	-	0.0	-0.667

Bothell Sewer Comprehensive Plan
Sewer Model Results (Buildout Scenario)

Pipe ID	Diameter (in.)	Upstream MH	From Invert (ft)	To Invert (ft)	Length (ft)	Slope	Max Flow (gpm)	Capacity (gpm)	Max q/Q	Max Velocity (fps)	Upstream Max. Surcharge (ft)
53123TO53121	8	53123	96.42	85.97	182.686	0.057	-	1,301	-	0.0	-0.667
53124TO53123	8	53124	106.52	96.42	200	0.051	-	1,222	-	0.0	-0.667
53125TO53124	8	53125	111.82	106.52	100.013	0.053	-	1,252	-	0.0	-0.667
53126TO53123	8	53126	112.52	96.42	274.154	0.059	-	1,318	-	0.0	-0.667
53127TO62047	8	53127	148.82	146.58	262.681	0.009	-	502	-	0.0	-0.667
53128TO53127	8	53128	172.02	148.92	399.898	0.058	-	1,307	-	0.0	-0.667
54001TO61006	8	54001	263.01	257.56	202.865	0.027	13	891	0.01	2.0	-0.611
54002TO54001	8	54002	288.02	263.01	289.534	0.086	13	1,598	0.01	3.0	-0.625
54004TO54003	8	54004	316.62	301.31	217.009	0.071	13	1,444	0.01	2.8	-0.623
54005TO61007	8	54005	274.78	257.56	357.143	0.048	16	1,194	0.01	2.7	-0.613
54006TO54005	8	54006	303.00	274.78	326.014	0.087	16	1,600	0.01	3.3	-0.62
54007TO54006	8	54007	317.29	303.00	162.06	0.088	16	1,615	0.01	3.3	-0.62
54008TO54007	8	54008	317.39	317.29	37.488	0.003	16	281	0.06	1.0	-0.559
54009TO54008	8	54009	334.82	317.39	403.045	0.043	16	1,131	0.01	2.6	-0.611
54010TO54009	8	54010	336.92	334.82	31.79	0.066	16	1,398	0.01	3.0	-0.617
54011TO54010	8	54011	342.52	336.92	53.944	0.104	16	1,752	0.01	3.5	-0.622
54012TO54011	8	54012	346.48	342.52	110	0.036	-	1,032	-	0.0	-0.667
54013TO54011	8	54013	351.18	342.52	260	0.033	16	992	0.02	2.3	-0.608
54014TO54013	8	54014	358.52	351.18	130	0.056	16	1,292	0.01	2.8	-0.615
54017TO61009	8	54017	269.32	257.42	140.013	0.085	13	1,585	0.01	3.1	-0.624
54018TO54017	8	54018	278.26	269.32	184	0.049	13	1,199	0.01	2.5	-0.618
54019TO54018	8	54019	290.97	278.26	216.75	0.059	13	1,317	0.01	2.7	-0.62
54022TO54019	8	54022	309.38	290.97	237.114	0.078	13	1,515	0.01	3.0	-0.623
54023TO54022	8	54023	313.79	309.38	73.897	0.06	13	1,328	0.01	2.7	-0.62
54025TO54023	8	54025	319.16	313.79	50.999	0.105	13	1,765	0.01	3.3	-0.626
54026TO54025	8	54026	336.62	319.16	196	0.089	13	1,623	0.01	3.1	-0.624
54027TO54026	8	54027	346.40	336.62	333.541	0.029	13	931	0.01	2.1	-0.612
54028TO61012	8	54028	260.68	242.12	272.489	0.068	6	1,419	0.00	2.2	-0.636
54030TO54028	8	54030	275.49	260.68	205.132	0.072	6	1,461	0.00	2.2	-0.637
54033TO61015	8	54033	232.62	218.39	280.009	0.051	30	1,226	0.02	3.3	-0.594
54034TO54033	8	54034	262.92	232.62	398.004	0.076	30	1,500	0.02	3.8	-0.601
54035TO54034	8	54035	297.52	262.92	335.747	0.103	-	1,746	-	0.0	-0.667

Bothell Sewer Comprehensive Plan
Sewer Model Results (Buildout Scenario)

Pipe ID	Diameter (in.)	Upstream MH	From Invert (ft)	To Invert (ft)	Length (ft)	Slope	Max Flow (gpm)	Capacity (gpm)	Max q/Q	Max Velocity (fps)	Upstream Max. Surcharge (ft)
54037TO54034	8	54037	277.62	262.92	116.564	0.126	30	1,931	0.02	4.5	-0.608
54038TO54037	8	54038	313.35	277.62	340	0.105	-	1,763	-	0.0	-0.667
54040TO54037	8	54040	284.07	277.62	308.025	0.021	30	787	0.04	2.4	-0.577
54042TO54040	8	54042	294.00	284.07	108.789	0.091	30	1,643	0.02	4.1	-0.604
54043TO54042	8	54043	301.30	294.00	240	0.03	-	948	-	0.0	-0.667
54045TO54042	8	54045	323.28	294.10	233.161	0.125	30	1,924	0.02	4.5	-0.608
54046TO54045	8	54046	333.75	323.38	210.104	0.049	-	1,208	-	0.0	-0.667
54048TO54045	8	54048	341.27	323.38	242.483	0.074	30	1,477	0.02	3.8	-0.601
54049TO54048	8	54049	349.50	341.27	214.947	0.038	30	1,064	0.03	3.0	-0.589
54050TO54049	8	54050	352.10	349.50	246.981	0.011	30	558	0.05	1.9	-0.561
54051TO54050	8	54051	358.61	352.10	202.229	0.032	30	976	0.03	2.8	-0.586
54052TO54051	8	54052	360.78	358.61	232.547	0.009	30	525	0.06	1.8	-0.558
54053TO61016	8	54053	216.43	208.92	200.619	0.037	-	1,052	-	0.0	-0.667
54054TO54053	8	54054	240.15	216.43	295.348	0.08	-	1,541	-	0.0	-0.667
54055TO61018	8	54055	195.36	179.08	398.484	0.041	-	1,099	-	0.0	-0.667
54056TO54055	8	54056	211.92	195.36	286.059	0.058	-	1,308	-	0.0	-0.667
54057TO54056	8	54057	264.59	211.92	456.611	0.115	-	1,847	-	0.0	-0.667
54059TO54060	8	54059	314.42	313.93	148	0.003	6	313	0.02	0.8	-0.605
54060TO54103	8	54060	313.83	310.62	236.629	0.014	6	633	0.01	1.3	-0.622
54061TO54062	8	54061	307.48	280.96	420.564	0.063	10	1,366	0.01	2.6	-0.626
54062TO53079	8	54062	280.96	270.66	132.773	0.078	14	1,515	0.01	3.0	-0.622
54063TO54064	8	54063	355.62	352.11	291	0.012	18	597	0.03	1.7	-0.586
54064TO54065	8	54064	352.01	331.00	263.173	0.08	18	1,536	0.01	3.3	-0.615
54065TO54066	8	54065	331.00	311.92	277.999	0.069	18	1,425	0.01	3.2	-0.614
54066TO54068	8	54066	309.16	308.52	64.309	0.01	145	544	0.27	2.9	-0.537
54067TO54066	8	54067	310.08	309.16	89	0.01	126	553	0.23	2.9	-0.567
54068TO54069	8	54068	308.52	307.75	78.079	0.01	141	541	0.26	2.9	-0.537
54069TO54070	8	54069	307.70	305.87	198.694	0.009	139	522	0.27	2.8	-0.49
54070TO54073	8	54070	305.82	302.24	388.247	0.009	139	522	0.27	2.8	-0.456
54071TO54070	8	54071	322.53	308.98	107.787	0.126	-	1,928	-	0.0	-0.667
54072TO54071	8	54072	342.42	322.53	182.882	0.109	-	1,793	-	0.0	-0.667
54073TO54074	8	54073	302.19	301.03	125.463	0.009	135	522	0.26	2.8	-0.483

Bothell Sewer Comprehensive Plan
Sewer Model Results (Buildout Scenario)

Pipe ID	Diameter (in.)	Upstream MH	From Invert (ft)	To Invert (ft)	Length (ft)	Slope	Max Flow (gpm)	Capacity (gpm)	Max q/Q	Max Velocity (fps)	Upstream Max. Surcharge (ft)
54074TO54075	8	54074	300.98	297.78	347.578	0.009	134	522	0.26	2.8	-0.499
54075TO54007	8	54075	297.73	295.37	293.952	0.008	130	487	0.27	2.6	-0.444
54076TO54075	8	54076	319.07	307.77	110.068	0.103	-	1,742	-	0.0	-0.667
54077TO54092	8	54077	295.27	294.81	284	0.002	151	219	0.69	1.5	-0.278
54078TO54077	8	54078	324.12	295.37	336	0.086	26	1,591	0.02	3.8	-0.607
54079TO54078	8	54079	328.12	324.12	229	0.017	26	719	0.04	2.2	-0.579
54080TO54079	8	54080	332.86	328.12	78	0.061	26	1,341	0.02	3.4	-0.602
54081TO54080	8	54081	334.44	332.86	215.292	0.007	15	466	0.03	1.4	-0.585
54082TO54081	8	54082	344.29	334.44	128.831	0.076	10	1,504	0.01	2.7	-0.628
54083TO54082	8	54083	360.62	344.29	196.139	0.083	10	1,569	0.01	2.8	-0.629
54084TO54083	8	54084	361.40	360.72	134.806	0.005	10	386	0.03	1.1	-0.593
54085TO54084	8	54085	365.61	361.40	122.281	0.034	-	1,009	-	0.0	-0.667
54086TO54084	8	54086	363.44	361.40	282.5	0.007	10	462	0.02	1.2	-0.599
54087TO54086	8	54087	367.97	363.44	226.447	0.02	-	769	-	0.0	-0.667
54089TO54086	8	54089	366.16	363.44	267	0.01	10	549	0.02	1.4	-0.604
54090TO54106	8	54090	342.52	337.38	191	0.027	11	892	0.01	2.0	-0.614
54091TO54090	8	54091	343.02	342.52	222	0.002	11	258	0.04	0.8	-0.571
54092TO54097	8	54092	294.52	292.82	110.2	0.015	156	675	0.23	3.5	-0.455
54093TO54092	8	54093	308.62	294.62	196	0.071	10	1,453	0.01	2.7	-0.627
54094TO54093	8	54094	317.62	308.72	234.57	0.038	10	1,059	0.01	2.1	-0.621
54095TO54094	8	54095	326.42	317.72	400	0.022	10	802	0.01	1.8	-0.615
54096TO54095	8	54096	327.92	326.42	225.525	0.007	10	443	0.02	1.2	-0.598
54097TO54098	8	54097	292.72	283.51	245.499	0.038	154	1,053	0.15	4.8	-0.503
54098TO54100	8	54098	283.51	279.42	109	0.038	182	1,053	0.17	5.0	-0.489
54099TO54098	8	54099	301.98	283.51	362	0.051	34	1,228	0.03	3.4	-0.59
54100TO54101	8	54100	279.42	268.92	230	0.046	179	1,162	0.15	5.4	-0.503
54101TO54102	8	54101	268.92	263.92	236.619	0.021	178	790	0.22	4.1	-0.476
54102TO53083	8	54102	263.92	259.19	122.903	0.038	178	1,067	0.17	5.0	-0.499
54103TO54061	8	54103	310.52	307.58	374.183	0.008	6	482	0.01	1.0	-0.616
54104TO54081	8	54104	336.62	334.44	254.402	0.009	5	503	0.01	1.0	-0.62
54105TO54104	8	54105	342.42	336.62	222.92	0.026	5	877	0.01	1.5	-0.63
54106TO54080	8	54106	337.38	332.86	167.623	0.027	11	893	0.01	2.0	-0.614

Bothell Sewer Comprehensive Plan
Sewer Model Results (Buildout Scenario)

Pipe ID	Diameter (in.)	Upstream MH	From Invert (ft)	To Invert (ft)	Length (ft)	Slope	Max Flow (gpm)	Capacity (gpm)	Max q/Q	Max Velocity (fps)	Upstream Max. Surcharge (ft)
54107TO54106	8	54107	349.52	337.38	223.227	0.054	-	1,268	-	0.0	-0.667
61002TO61003	8	61002	248.32	247.21	33.139	0.033	26	995	0.03	2.7	-0.593
61003TO61044	8	61003	247.11	235.10	363.996	0.033	47	988	0.05	3.2	-0.568
61004TO61003	8	61004	253.90	250.11	344.807	0.011	-	570	-	0.0	-0.667
61005TO61006	8	61005	259.09	257.56	315.948	0.005	-	378	-	0.0	-0.667
61006TO61007	10	61006	257.56	257.24	357.972	0.001	48	295	0.16	0.9	-0.606
61007TO61008	10	61007	257.24	257.13	46	0.002	64	482	0.13	1.4	-0.628
61008TO61009	10	61008	257.03	254.42	238.707	0.011	64	1,031	0.06	2.3	-0.693
61009TO61010	10	61009	254.32	253.62	61.313	0.011	77	1,054	0.07	2.5	-0.681
61010TO61011	10	61010	253.62	251.69	135.014	0.014	77	1,179	0.07	2.7	-0.689
61011TO61012	10	61011	251.69	242.12	201.945	0.047	77	2,146	0.04	4.1	-0.726
61012TO61013	8	61012	242.12	240.27	15.806	0.117	83	1,860	0.04	6.0	-0.571
61013TO61014	8	61013	240.27	235.69	125.272	0.037	91	1,040	0.09	4.1	-0.533
61014TO3006	8	61014	235.69	225.67	251.221	0.04	91	1,086	0.08	4.2	-0.536
61015TO61016	8	61015	218.39	208.92	166.628	0.057	122	1,296	0.09	5.2	-0.529
61016TO61017	8	61016	208.92	194.22	264.016	0.056	237	1,283	0.18	6.3	-0.473
61017TO61018	8	61017	194.22	179.08	425.872	0.036	237	1,025	0.23	5.3	-0.449
61018TO62050	8	61018	179.08	161.22	313.202	0.057	237	1,299	0.18	6.3	-0.474
61019TO61013	8	61019	240.78	240.27	129.652	0.004	9	341	0.03	0.9	-0.592
61020TO61019	8	61020	242.07	240.78	137.22	0.009	9	527	0.02	1.3	-0.606
61021TO61020	8	61021	242.47	242.17	10.218	0.029	9	932	0.01	1.9	-0.62
61022TO61021	8	61022	243.13	242.47	90.603	0.007	9	464	0.02	1.2	-0.602
61023TO21022	8	61023	243.98	243.13	181.88	0.005	9	372	0.02	1.0	-0.595
61024TO61023	8	61024	245.00	244.08	112	0.008	9	493	0.02	1.2	-0.604
61024TO64025	8	64024	261.85	258.88	80.215	0.037	-	1,046	-	0.0	-0.667
61025TO61024	8	61025	245.35	245.10	149	0.002	9	223	0.04	0.7	-0.575
61026TO61007	8	61026	258.59	257.56	234.784	0.004	-	360	-	0.0	-0.667
61029TO61044	8	61029	241.42	235.10	145.021	0.044	-	1,135	-	0.0	-0.667
61030TO31029	8	61030	242.12	241.42	34.434	0.02	-	775	-	0.0	-0.667
61031TO1678	8	61031	223.92	223.27	140	0.005	70	371	0.19	1.8	-0.471
61032TO61031	8	61032	224.25	224.02	23.438	0.01	47	539	0.09	2.1	-0.534
61035TO2066	8	61035	225.16	225.07	7.609	0.012	47	591	0.08	2.3	-0.54

Bothell Sewer Comprehensive Plan
Sewer Model Results (Buildout Scenario)

Pipe ID	Diameter (in.)	Upstream MH	From Invert (ft)	To Invert (ft)	Length (ft)	Slope	Max Flow (gpm)	Capacity (gpm)	Max q/Q	Max Velocity (fps)	Upstream Max. Surcharge (ft)
61036TO61035	8	61036	226.86	225.26	336.517	0.005	47	375	0.13	1.6	-0.507
61037TO62041	8	61037	96.07	87.59	74.711	0.114	164	1,832	0.09	7.2	-0.532
61038TO61037	8	61038	98.07	96.17	180.357	0.011	164	558	0.29	3.1	-0.42
61039TO61038	8	61039	99.73	98.17	90.108	0.017	164	716	0.23	3.7	-0.45
61040TO61039	8	61040	104.16	99.83	210.165	0.021	164	781	0.21	3.9	-0.46
61041TO61040	8	61041	106.83	104.26	125	0.021	164	780	0.21	3.9	-0.46
61043TO61041	8	61043	110.30	106.93	163.197	0.021	164	781	0.21	3.9	-0.46
61044TO61045	8	61044	235.10	233.61	36.2	0.041	47	1,103	0.04	3.5	-0.573
61045TO61036	8	61045	233.51	226.96	322.979	0.02	47	774	0.06	2.7	-0.555
61046TO61045	8	61046	236.82	233.51	250.839	0.013	-	625	-	0.0	-0.667
61047TO61046	8	61047	238.99	236.82	151.587	0.014	-	651	-	0.0	-0.667
61052TO61053	8	61052	188.70	187.56	228	0.005	164	385	0.43	2.4	-0.364
61053TO61054	8	61053	187.46	177.22	141	0.073	164	1,465	0.11	6.2	-0.517
61054TO61055	8	61054	177.12	148.12	155	0.187	164	2,352	0.07	8.6	-0.548
61055TO61043	8	61055	147.62	111.87	250.245	0.143	164	2,055	0.08	7.8	-0.54
61056TO65053	8	61056	191.34	187.56	143	0.026	-	884	-	0.0	-0.667
61057TO61056	8	61057	198.22	191.44	99.954	0.068	-	1,416	-	0.0	-0.667
61058TO61057	8	61058	209.62	198.32	351.115	0.032	-	976	-	0.0	-0.667
62002TO62003	8	62002	220.62	217.62	111.568	0.027	-	892	-	0.0	-0.667
62003TO62004	8	62003	217.52	204.58	371.785	0.035	90	1,015	0.09	4.0	-0.533
62004TO62006	8	62004	204.58	193.18	158.889	0.072	187	1,457	0.13	6.4	-0.505
62005TO62004	8	62005	211.12	204.58	106.848	0.061	-	1,345	-	0.0	-0.667
62006TO62007	8	62006	193.18	177.22	253.186	0.063	187	1,365	0.14	6.1	-0.5
62007TO62060	8	62007	177.22	172.62	127.348	0.036	187	1,034	0.18	5.0	-0.475
62008TO62059	8	62008	226.62	216.42	147.53	0.069	-	1,430	-	0.0	-0.667
62009TO62011	8	62009	154.52	142.02	144.672	0.086	187	1,598	0.12	6.8	-0.513
62011TO62012	8	62011	142.02	140.12	22	0.086	187	1,598	0.12	6.8	-0.513
62012TO62014	8	62012	140.12	130.22	193	0.051	187	1,232	0.15	5.7	-0.491
62013TO62012	8	62013	148.77	140.12	437	0.02	-	765	-	0.0	-0.667
62014TO2120	8	62014	130.22	122.41	121.411	0.064	187	1,379	0.14	6.2	-0.501
62015TO62016	8	62015	107.40	87.44	163	0.122	187	1,903	0.10	7.7	-0.525
62016TO62017	8	62016	87.34	74.27	206.1	0.063	187	1,369	0.14	6.1	-0.5

Bothell Sewer Comprehensive Plan
Sewer Model Results (Buildout Scenario)

Pipe ID	Diameter (in.)	Upstream MH	From Invert (ft)	To Invert (ft)	Length (ft)	Slope	Max Flow (gpm)	Capacity (gpm)	Max q/Q	Max Velocity (fps)	Upstream Max. Surcharge (ft)
62017TO62023	8	62017	74.17	70.33	118.165	0.032	187	980	0.19	4.8	-0.469
62023TO62024	10	62023	70.33	68.22	226.813	0.009	820	951	0.86	4.4	-0.238
62024TO62025	10	62024	68.22	66.84	75.208	0.018	820	1,336	0.61	5.7	-0.362
62025TO62026	10	62025	66.84	66.02	89.788	0.009	820	942	0.87	4.3	-0.234
62026TO62027	10	62026	66.02	61.56	200.707	0.022	894	1,470	0.61	6.3	-0.365
62027TO62079	10	62027	61.56	57.21	405.3	0.011	907	1,021	0.89	4.7	-0.224
62028TO62043	12	62028	79.42	77.82	215	0.007	-	1,383	-	0.0	-1
62029TO62109	10	62029	79.32	79.02	22	0.014	396	1,151	0.34	4.3	-0.497
62030TO62029	10	62030	79.92	79.42	127.917	0.004	396	616	0.64	2.7	-0.349
62031TO62030	10	62031	80.72	80.02	280	0.002	396	493	0.80	2.2	-0.27
62032TO62031	10	62032	81.82	80.82	200	0.005	396	697	0.57	2.9	-0.384
62033TO62032	10	62033	82.62	81.92	78	0.009	396	934	0.42	3.7	-0.455
62034TO62033	8	62034	83.32	82.62	53.048	0.013	-	625	-	0.0	-0.667
62035TO62034	8	62035	84.62	83.32	182	0.007	-	460	-	0.0	-0.667
62036TO62033	10	62036	83.18	82.62	100.398	0.006	396	736	0.54	3.1	-0.399
62037TO62036	10	62037	85.52	83.18	223.342	0.01	396	1,009	0.39	3.9	-0.471
62038TO62102	8	62038	86.09	85.92	62	0.003	396	285	1.39	2.5	0.159
62039TO62038	8	62039	86.49	86.09	98.969	0.004	396	346	1.15	2.5	0.285
62040TO62039	8	62040	86.89	86.49	95.006	0.004	396	353	1.12	2.5	0.39
62041TO62040	8	62041	87.49	86.99	165	0.003	396	299	1.32	2.5	0.667
62043TO62044	12	62043	77.82	75.61	408.409	0.005	-	1,179	-	0.0	-1
62044TO62027	8	62044	75.61	61.56	365.047	0.038	13	1,067	0.01	2.3	-0.615
62045TO62109	8	62045	97.82	79.42	248	0.074	237	1,481	0.16	6.9	-0.487
62047TO62068	8	62047	117.13	101.36	300.692	0.052	237	1,245	0.19	6.1	-0.47
62048TO62047	8	62048	136.63	117.13	394.035	0.049	237	1,210	0.20	6.0	-0.467
62049TO62048	8	62049	146.58	138.63	223.35	0.036	237	1,026	0.23	5.3	-0.449
62050TO62049	8	62050	161.22	146.58	360.145	0.041	237	1,096	0.22	5.6	-0.456
62052TO62044	8	62052	97.72	75.61	257.304	0.086	13	1,594	0.01	3.1	-0.624
62053TO62027	8	62053	61.75	61.56	149.428	0.001	-	194	-	0.0	-0.248
62054TO62053	8	62054	72.16	61.75	252.184	0.041	-	1,105	-	0.0	-0.667
62059TO62060	8	62059	216.42	172.62	438	0.1	-	1,720	-	0.0	-0.667
62060TO62009	8	62060	172.52	154.52	134.802	0.134	187	1,987	0.09	8.0	-0.528

Bothell Sewer Comprehensive Plan
Sewer Model Results (Buildout Scenario)

Pipe ID	Diameter (in.)	Upstream MH	From Invert (ft)	To Invert (ft)	Length (ft)	Slope	Max Flow (gpm)	Capacity (gpm)	Max q/Q	Max Velocity (fps)	Upstream Max. Surcharge (ft)
62061TO62062	8	62061	222.82	195.42	400	0.068	-	1,423	-	0.0	-0.667
62062TO62007	8	62062	195.42	177.32	133	0.136	-	2,006	-	0.0	-0.667
62068TO62045	8	62068	101.36	97.82	115.19	0.031	237	953	0.25	5.0	-0.441
62074TO62005	8	62074	219.52	211.12	187.79	0.045	-	1,150	-	0.0	-0.667
62075TO62054	8	62075	77.25	72.16	70.124	0.073	-	1,465	-	0.0	-0.667
62077TO62078	8	62077	103.92	101.92	107.252	0.019	13	743	0.02	1.8	-0.605
62078TO53013	8	62078	101.92	101.58	88.002	0.004	13	338	0.04	1.0	-0.577
62079TO62080	10	62079	57.11	55.96	116	0.01	907	982	0.92	4.6	-0.204
62080TO62082	10	62080	55.96	55.92	94	0	907	203	4.46	3.7	0.752
62082TO62083	10	62082	55.92	51.81	213	0.019	907	1,370	0.66	6.0	-0.34
62083TO71028	10	62083	51.81	46.82	426.746	0.012	907	1,066	0.85	4.9	-0.245
62084TO62083	8	62084	53.52	51.81	437.016	0.004	-	340	-	0.0	-0.667
62085TO71016	8	62085	74.62	64.90	142.886	0.068	50	1,418	0.04	4.2	-0.581
62086TO62085	8	62086	100.22	74.62	121	0.212	50	2,501	0.02	6.3	-0.601
62087TO62086	8	62087	115.12	100.22	242.131	0.062	50	1,349	0.04	4.1	-0.579
62088TO62087	8	62088	127.52	115.12	129.111	0.096	50	1,685	0.03	4.8	-0.588
62089TO62088	8	62089	140.52	127.52	197.101	0.066	50	1,397	0.04	4.2	-0.58
62090TO62089	8	62090	155.62	140.52	231.815	0.065	50	1,388	0.04	4.2	-0.58
62091TO62090	8	62091	161.27	155.62	167.459	0.034	50	999	0.05	3.3	-0.565
62092TO62091	8	62092	161.52	161.27	156.813	0.002	-	217	-	0.0	-0.667
62094TO62095	8	62094	217.62	210.10	149.788	0.05	35	1,218	0.03	3.4	-0.589
62095TO62096	8	62095	210.10	204.02	433.049	0.014	35	644	0.05	2.2	-0.561
62096TO62100	8	62096	204.02	191.12	476	0.027	35	895	0.04	2.8	-0.577
62098TO62099	8	62098	63.02	52.82	306.286	0.033	16	992	0.02	2.4	-0.607
62099TO2031	8	62099	52.72	44.72	304.027	0.026	181	882	0.20	4.4	-0.462
62100TO62101	8	62100	191.12	188.62	272.562	0.009	148	521	0.28	2.9	-0.424
62101TO71001	8	62101	188.62	187.56	507.534	0.002	148	249	0.59	1.7	-0.297
62102TO62037	10	62102	85.92	85.52	77.397	0.005	396	709	0.56	3.0	-0.388
62103TO62102	8	62103	88.72	86.55	64.778	0.033	-	995	-	0.0	-0.667
62104TO62103	8	62104	89.15	88.72	53.235	0.008	-	489	-	0.0	-0.667
62105TO62104	8	62105	90.04	89.15	140.014	0.006	-	434	-	0.0	-0.667
62106TO62105	8	62106	96.47	90.04	106.367	0.06	-	1,337	-	0.0	-0.667

Bothell Sewer Comprehensive Plan
Sewer Model Results (Buildout Scenario)

Pipe ID	Diameter (in.)	Upstream MH	From Invert (ft)	To Invert (ft)	Length (ft)	Slope	Max Flow (gpm)	Capacity (gpm)	Max q/Q	Max Velocity (fps)	Upstream Max. Surcharge (ft)
62109TO62023	10	62109	78.92	70.33	175	0.049	633	2,184	0.29	7.7	-1
62109TO62028	12	62109	79.42	79.42	17.946	0	-	-		0.0	-1
63001TO63002	8	63001	262.09	258.32	400.541	0.009	33	528	0.06	1.9	-0.553
63002TO63003	8	63002	258.32	257.75	400.441	0.001	33	205	0.16	1.0	-0.486
63003TO63004	8	63003	257.75	256.62	308.591	0.004	33	329	0.10	1.3	-0.524
63004TO63005	8	63004	256.62	256.22	151.32	0.003	33	280	0.12	1.2	-0.512
63005TO63006	8	63005	256.12	255.12	343.179	0.003	33	294	0.11	1.2	-0.516
63006TO63007	8	63006	255.12	248.32	356.003	0.019	33	752	0.04	2.4	-0.571
63007TO63009	8	63007	248.32	247.62	138	0.005	33	387	0.09	1.5	-0.535
63008TO63007	8	63008	248.92	248.32	227.017	0.003	-	280	-	0.0	-0.667
63009TO63010	8	63009	247.52	240.15	310	0.024	65	838	0.08	3.2	-0.541
63010TO63012	8	63010	240.15	234.12	229.013	0.026	65	882	0.07	3.3	-0.544
63011TO63010	8	63011	243.76	240.15	366.114	0.01	-	540	-	0.0	-0.667
63012TO63015	8	63012	234.12	221.12	476.228	0.027	65	898	0.07	3.3	-0.545
63013TO63012	8	63013	235.12	234.12	127.4	0.008	-	482	-	0.0	-0.667
63014TO63013	8	63014	236.77	235.12	365	0.005	-	366	-	0.0	-0.667
63015TO62100	8	63015	221.12	191.12	446.074	0.067	65	1,410	0.05	4.6	-0.569
63016TO64002	8	63016	266.26	264.98	356.403	0.004	-	326	-	0.0	-0.667
63017TO63018	8	63017	266.41	266.21	164.628	0.001	12	190	0.06	0.7	-0.554
63018TO63019	8	63018	266.21	265.22	125.216	0.008	12	484	0.02	1.3	-0.595
63019TO63020	8	63019	265.22	262.37	299.969	0.01	12	530	0.02	1.4	-0.598
63020TO63021	8	63020	262.37	251.92	298.978	0.035	12	1,017	0.01	2.2	-0.616
63021TO63002	8	63021	251.92	242.42	160	0.059	12	1,325	0.01	2.6	-0.622
63022TO63028	8	63022	242.42	238.02	128.995	0.034	26	1,004	0.03	2.7	-0.593
63023TO63022	8	63023	254.17	242.42	324.219	0.036	14	1,035	0.01	2.3	-0.613
63024TO63023	8	63024	262.02	254.27	189.929	0.041	14	1,098	0.01	2.4	-0.614
63025TO63024	8	63025	268.93	262.02	170.9	0.04	-	1,093	-	0.0	-0.667
63026TO63025	8	63026	269.69	268.93	112.856	0.007	-	446	-	0.0	-0.667
63027TO63029	8	63027	229.24	219.62	288.918	0.033	26	992	0.03	2.7	-0.593
63028TO63027	8	63028	238.02	229.34	162.979	0.053	26	1,255	0.02	3.2	-0.601
63029TO62003	8	63029	219.52	217.62	109.712	0.017	90	716	0.13	3.1	-0.507
63030TO62096	8	63030	231.82	204.02	439.557	0.063	-	1,368	-	0.0	-0.667

Bothell Sewer Comprehensive Plan
Sewer Model Results (Buildout Scenario)

Pipe ID	Diameter (in.)	Upstream MH	From Invert (ft)	To Invert (ft)	Length (ft)	Slope	Max Flow (gpm)	Capacity (gpm)	Max q/Q	Max Velocity (fps)	Upstream Max. Surcharge (ft)
63032TO63030	8	63032	235.12	231.82	280	0.012	-	590	-	0.0	-0.667
63034TO62094	8	63034	232.52	217.62	233.617	0.064	35	1,373	0.03	3.7	-0.593
63035TO63034	8	63035	241.21	232.52	225	0.039	35	1,069	0.03	3.1	-0.584
63036TO63035	8	63036	244.31	241.21	148.173	0.021	35	787	0.04	2.5	-0.571
63037TO63036	8	63037	249.64	244.31	351.882	0.015	35	669	0.05	2.3	-0.563
63038TO63036	8	63038	255.05	244.31	272.05	0.039	-	1,080	-	0.0	-0.667
63039TO63037	8	63039	260.21	249.64	267.57	0.04	35	1,081	0.03	3.2	-0.584
63043TO63009	8	63043	254.32	247.62	409.4	0.016	32	696	0.05	2.3	-0.569
63045TO63004	8	63045	258.38	256.72	178.163	0.009	-	525	-	0.0	-0.667
64001TO63001	8	64001	263.12	262.09	411.017	0.003	33	272	0.12	1.2	-0.509
64002TO64004	8	64002	264.98	262.89	314.2	0.007	-	444	-	0.0	-0.667
64003TO64004	8	64003	273.18	262.89	111.698	0.092	-	1,651	-	0.0	-0.667
64004TO64005	8	64004	262.89	261.70	95.222	0.012	-	608	-	0.0	-0.667
64005TO64006	8	64005	261.70	249.27	264.855	0.047	-	1,178	-	0.0	-0.667
64006TO64007	8	64006	249.27	239.62	220.713	0.044	-	1,137	-	0.0	-0.667
64007TO64010	8	64007	239.62	224.53	300	0.05	-	1,220	-	0.0	-0.667
64008TO64009	8	64008	237.48	221.20	152.767	0.107	-	1,775	-	0.0	-0.667
64009TO63029	8	64009	221.20	219.62	253.541	0.006	64	429	0.15	2.0	-0.492
64010TO64009	8	64010	224.53	221.20	170.187	0.02	64	761	0.08	3.0	-0.536
64011TO64010	8	64011	224.68	224.53	170.05	0.001	-	162	-	0.0	-0.667
64012TO64011	8	64012	235.27	224.68	299.596	0.035	-	1,022	-	0.0	-0.667
64013TO64012	8	64013	244.04	235.27	236.558	0.037	-	1,047	-	0.0	-0.667
64014TO64013	8	64014	245.24	244.04	303.859	0.004	-	342	-	0.0	-0.667
64015TO64014	8	64015	245.64	245.24	138.192	0.003	-	293	-	0.0	-0.667
64016TO64015	8	64016	246.35	245.64	157.152	0.005	-	366	-	0.0	-0.667
64017TO64018	8	64017	256.67	256.28	80.293	0.005	-	379	-	0.0	-0.667
64018TO64019	8	64018	256.28	249.82	92.043	0.07	-	1,441	-	0.0	-0.667
64019TO64015	8	64019	249.82	245.74	218.254	0.019	-	744	-	0.0	-0.667
64020TO64019	8	64020	250.66	249.82	138.195	0.006	-	424	-	0.0	-0.667
64021TO64020	8	64021	254.16	250.66	105.3	0.033	-	991	-	0.0	-0.667
64022TO61021	8	64022	258.38	254.43	105.198	0.038	-	1,054	-	0.0	-0.667
64023TO64024	8	64023	268.17	261.85	253.157	0.025	-	859	-	0.0	-0.667

Bothell Sewer Comprehensive Plan
Sewer Model Results (Buildout Scenario)

Pipe ID	Diameter (in.)	Upstream MH	From Invert (ft)	To Invert (ft)	Length (ft)	Slope	Max Flow (gpm)	Capacity (gpm)	Max q/Q	Max Velocity (fps)	Upstream Max. Surcharge (ft)
64025TO64022	8	64025	258.88	258.38	89.133	0.006	-	407	-	0.0	-0.667
64026TO64025	8	64026	259.41	258.88	168.435	0.003	-	305	-	0.0	-0.667
71001TO71002	8	71001	187.56	169.22	326.146	0.056	148	1,290	0.11	5.5	-0.515
71002TO71003	8	71002	169.22	146.38	300.313	0.076	148	1,500	0.10	6.1	-0.526
71003TO71004	8	71003	146.38	144.84	31.465	0.049	148	1,203	0.12	5.2	-0.509
71004TO71009	8	71004	144.84	126.72	198.811	0.091	148	1,642	0.09	6.5	-0.532
71005TO71003	8	71005	161.11	146.38	170.882	0.086	-	1,597	-	0.0	-0.667
71006TO71005	8	71006	162.03	161.11	153.937	0.006	-	420	-	0.0	-0.667
71007TO71006	8	71007	168.88	162.13	349.5	0.019	-	756	-	0.0	-0.667
71009TO71011	8	71009	126.72	100.72	126.615	0.205	148	2,464	0.06	8.7	-0.556
71010TO71009	8	71010	136.02	126.72	156.506	0.059	-	1,326	-	0.0	-0.667
71011TO71012	8	71011	100.72	77.17	108.425	0.217	148	2,534	0.06	8.8	-0.558
71012TO71113	8	71012	77.17	53.72	236.465	0.099	148	1,712	0.09	6.7	-0.535
71014TO71113	8	71014	55.11	53.72	126.322	0.011	50	570	0.09	2.2	-0.533
71015TO71014	8	71015	57.49	55.21	102.288	0.022	50	812	0.06	2.9	-0.555
71016TO71015	8	71016	64.90	57.49	332.562	0.022	50	812	0.06	2.9	-0.555
71017TO71023	8	71017	51.04	48.92	274.619	0.008	197	478	0.41	2.9	-0.369
71018TO71017	8	71018	51.65	51.04	65.266	0.009	-	526	-	0.0	-0.667
71019TO71018	8	71019	59.02	51.65	148.571	0.05	-	1,211	-	0.0	-0.667
71020TO71019	8	71020	103.72	59.02	108.36	0.413	-	3,493	-	0.0	-0.667
71021TO71020	8	71021	128.62	103.72	190.478	0.131	-	1,966	-	0.0	-0.667
71023TO71024	8	71023	48.92	44.82	396.182	0.01	197	553	0.36	3.2	-0.392
71024TO71035	8	71024	44.82	38.44	229.688	0.028	197	906	0.22	4.6	-0.456
71025TO71115	10	71025	41.83	38.14	289.438	0.013	971	1,113	0.87	5.1	-0.234
71027TO71025	10	71027	45.92	41.83	247.424	0.017	971	1,268	0.77	5.7	-0.289
71028TO71027	10	71028	46.59	45.92	19.129	0.035	64	1,845	0.03	3.5	-0.827
71028TO71029	10	71028	46.69	38.92	331.977	0.023	0	1,508	0.00	0.0	-0.827
71029TO71030	10	71029	38.92	36.46	220.318	0.011	0	1,042	0.00	0.0	-0.833
71030TO71094	10	71030	36.46	35.62	207	0.004	0	628	0.00	0.3	-0.824
71031TO71030	10	71031	37.03	36.46	104.257	0.005	-	729	-	0.0	-0.833
71032TO71031	10	71032	37.54	37.03	108.802	0.005	-	675	-	0.0	-0.833
71033TO71032	10	71033	38.62	37.71	99.148	0.009	-	945	-	0.0	-0.833

Bothell Sewer Comprehensive Plan
Sewer Model Results (Buildout Scenario)

Pipe ID	Diameter (in.)	Upstream MH	From Invert (ft)	To Invert (ft)	Length (ft)	Slope	Max Flow (gpm)	Capacity (gpm)	Max q/Q	Max Velocity (fps)	Upstream Max. Surcharge (ft)
71035TO71115	10	71035	38.44	37.52	9.743	0.094	197	3,030	0.07	7.0	-0.649
71038TO2072	12	71038	40.14	37.40	30	0.091	163	4,845	0.03	6.4	-0.875
71039TO71040	8	71039	78.54	63.63	126.806	0.118	163	1,865	0.09	7.3	-0.534
71040TO71038	8	71040	63.63	40.14	360.765	0.065	163	1,388	0.12	5.9	-0.513
71041TO71039	8	71041	115.21	78.54	311.976	0.118	163	1,864	0.09	7.3	-0.534
71042TO71041	8	71042	134.71	115.21	238.123	0.082	163	1,556	0.10	6.4	-0.521
71043TO71042	8	71043	154.11	134.81	173.567	0.111	163	1,813	0.09	7.2	-0.532
71044TO71043	8	71044	176.58	154.11	237.799	0.094	163	1,672	0.10	6.8	-0.526
71045TO71044	8	71045	184.86	176.58	230.099	0.036	163	1,032	0.16	4.8	-0.488
71046TO71045	8	71046	189.43	184.86	20.81	0.22	163	2,548	0.06	9.1	-0.552
71047TO71045	8	71047	187.19	184.86	221.129	0.011	-	558	-	0.0	-0.667
71048TO71047	8	71048	189.92	187.19	379.621	0.007	-	461	-	0.0	-0.667
71049TO71018	8	71049	59.72	51.65	275.37	0.029	-	931	-	0.0	-0.667
71050TO71042	8	71050	137.22	134.71	232.061	0.011	-	566	-	0.0	-0.667
71051TO71052	8	71051	172.22	169.96	122.528	0.018	-	739	-	0.0	-0.667
71052TO71043	8	71052	169.96	154.11	354.623	0.045	-	1,150	-	0.0	-0.667
71053TO71054	8	71053	173.92	172.21	117.259	0.015	-	657	-	0.0	-0.667
71054TO71055	8	71054	172.21	147.16	382.781	0.065	-	1,391	-	0.0	-0.667
71055TO71056	8	71055	147.16	145.61	250.997	0.006	-	427	-	0.0	-0.667
71056TO71058	8	71056	145.61	130.80	340.274	0.044	-	1,134	-	0.0	-0.667
71057TO71056	8	71057	161.96	145.61	167.776	0.097	-	1,698	-	0.0	-0.667
71058TO1577	8	71058	130.70	129.51	93.022	0.013	67	615	0.11	2.6	-0.518
71063TO71112	8	71063	82.52	58.52	196.591	0.122	67	1,900	0.04	5.7	-0.581
71070TO71067	8	71070	48.62	44.10	408.925	0.011	-	572	-	0.0	-0.667
71071TO71072	8	71071	36.62	34.23	119.699	0.02	-	769	-	0.0	-0.667
71072TO71073	8	71072	22.62	20.52	105.189	0.02	-	769	-	0.0	-0.667
71073TO71075	8	71073	20.42	14.82	280	0.02	-	769	-	0.0	-0.667
71074TO72010	36	71074	-2.69	-3.29	600	0.001	5,601	9,492	0.59	3.1	-1.417
71075TO71076	8	71075	14.72	14.29	21.165	0.02	-	769	-	0.0	-0.667
71076TO71074	36	71076	-2.43	-2.59	169	0.001	5,601	9,492	0.59	3.1	-1.382
71077TO71076	36	71077	-1.71	-2.33	614	0.001	5,637	9,492	0.59	3.1	-1.358
71078TO71077	36	71078	-1.28	-1.61	332	0.001	5,673	9,492	0.60	3.1	-1.381

Bothell Sewer Comprehensive Plan
Sewer Model Results (Buildout Scenario)

Pipe ID	Diameter (in.)	Upstream MH	From Invert (ft)	To Invert (ft)	Length (ft)	Slope	Max Flow (gpm)	Capacity (gpm)	Max q/Q	Max Velocity (fps)	Upstream Max. Surcharge (ft)
71086TO71078	36	71086	-0.52	-1.18	664	0.001	3,968	9,492	0.42	2.9	-1.703
71088TO84011	12	71088	32.02	30.24	323.797	0.005	-	1,189	-	0.0	-1
71090TO2080	8	71090	31.85	31.73	12	0.01	-	544	-	0.0	-0.667
71093TO2079	12	71093	33.43	33.03	20	0.02	205	2,267	0.09	4.0	-0.797
71094TO71093	12	71094	35.62	33.43	92.69	0.024	205	2,464	0.08	4.2	-0.805
71095TO71094	8	71095	35.92	35.62	47.267	0.006	205	433	0.47	2.7	-0.344
71096TO2031	8	71096	52.42	44.72	119.832	0.064	-	1,378	-	0.0	-0.667
71099TO71100	8	71099	103.42	65.92	292.385	0.128	-	1,947	-	0.0	-0.667
71100TO71015	8	71100	65.92	57.49	99.552	0.085	-	1,582	-	0.0	-0.667
71101TO71021	8	71101	145.52	128.62	202.982	0.083	-	1,569	-	0.0	-0.667
71110TO71071	8	71110	47.52	43.46	203.199	0.02	-	769	-	0.0	-0.667
71112TO71067	8	71112	58.42	44.10	122.495	0.117	67	1,859	0.04	5.6	-0.58
71113TO71017	8	71113	53.62	51.14	178.899	0.014	197	640	0.31	3.6	-0.413
71114TO71073	8	71114	22.62	20.51	158	0.013	-	628	-	0.0	-0.667
71115TO71033	10	71115	41.23	38.62	219	0.012	-	1,076	-	0.0	-3.443
71115TO71109	12	71115	35.04	30.80	138	0.031	1,168	2,810	0.42	7.6	-3.443
72003TO71110	8	72003	47.92	47.62	241.6	0.001	-	192	-	0.0	-0.667
72005TO72003	8	72005	49.70	47.92	253.705	0.007	-	455	-	0.0	-0.667
72006TO72005	8	72006	59.15	49.70	43.781	0.216	-	2,526	-	0.0	-0.667
72007TO72006	8	72007	61.30	59.15	415.978	0.005	-	391	-	0.0	-0.667
72008TO72005	8	72008	59.70	49.70	410.827	0.024	-	848	-	0.0	-0.667
72010TO72011	36	72010	-3.39	-3.62	221.5	0.001	5,589	9,503	0.59	3.1	-1.412
72011TO72013	36	72011	-3.72	-5.18	1466	0.001	5,565	9,492	0.59	3.1	-1.358
72013TO2035	36	72013	-5.28	-6.26	978	0.001	5,995	9,492	0.63	3.2	-1.332
72014TO72013	12	72014	24.22	20.62	23.671	0.152	543	6,253	0.09	10.9	-0.801
72015TO72014	12	72015	34.02	24.32	236	0.041	543	3,251	0.17	6.8	-0.724
72016TO72015	12	72016	37.17	34.02	281	0.011	543	1,698	0.32	4.3	-0.611
72017TO72018	8	72017	40.62	39.72	23.908	0.038	543	1,055	0.51	6.8	6.153
72018TO72016	12	72018	39.62	37.17	218	0.011	543	1,700	0.32	4.3	-0.611
72019TO72018	8	72019	46.52	39.62	106	0.065	-	1,387	-	0.0	-0.667
72020TO72019	8	72020	49.52	46.62	213.5	0.014	-	634	-	0.0	-0.667
72021TO72020	8	72021	51.49	49.62	91.5	0.02	-	777	-	0.0	-0.667

Bothell Sewer Comprehensive Plan
Sewer Model Results (Buildout Scenario)

Pipe ID	Diameter (in.)	Upstream MH	From Invert (ft)	To Invert (ft)	Length (ft)	Slope	Max Flow (gpm)	Capacity (gpm)	Max q/Q	Max Velocity (fps)	Upstream Max. Surcharge (ft)
72022TO72021	8	72022	52.62	51.49	25	0.045	-	1,156	-	0.0	-0.667
72023TO72021	8	72023	53.62	51.56	143.645	0.014	-	651	-	0.0	-0.667
72025TO72024	10	72025	22.12	21.64	25.547	0.019	257	1,352	0.19	4.2	-0.496
72026TO72025	10	72026	24.47	22.12	93.778	0.025	257	1,561	0.16	4.7	-0.605
72027TO72024	8	72027	22.01	21.64	132.3	0.003	248	288	0.86	2.1	-0.047
74003TO71046	8	74003	207.47	189.43	527.314	0.034	163	1,006	0.16	4.7	-0.485
81001TO52006	8	81001	76.24	74.94	65.004	0.02	-	769	-	0.0	-0.667
81002TO81001	8	81002	81.24	76.34	245	0.02	-	769	-	0.0	-0.667
81003TO81004	8	81003	147.53	123.89	213.134	0.111	19	1,811	0.01	3.8	-0.619
81004TO81005	8	81004	123.89	119.13	218.376	0.022	19	803	0.02	2.1	-0.596
81005TO81006	8	81005	119.13	116.46	136.028	0.02	19	762	0.02	2.1	-0.594
81006TO81007	8	81006	116.46	113.85	305.288	0.009	19	503	0.04	1.5	-0.579
81007TO84062	8	81007	113.85	112.12	147	0.012	19	590	0.03	1.7	-0.585
81009TO84023	24	81009	17.78	14.67	831.047	0.004	1,413	6,226	0.23	3.6	14.842
81010TO81009	21	81010	18.70	17.88	220.671	0.004	513	4,363	0.12	2.7	-1.346
81011TO81010	21	81011	20.27	18.80	392.08	0.004	451	4,360	0.10	2.6	-1.371
81012TO2100	21	81012	23.32	23.23	57.8	0.002	451	2,814	0.16	1.9	-1.277
81013TO81014	24	81013	31.12	29.92	329.724	0.004	427	6,142	0.07	2.5	-1.643
81014TO81015	24	81014	29.82	29.12	170.422	0.004	451	6,525	0.07	2.7	-1.644
81014TO84015	12	84014	26.62	26.42	246	0.001	660	457	1.44	1.9	2.5
81015TO81016	21	81015	29.02	28.52	100.886	0.005	451	5,020	0.09	2.9	-1.396
81016TO82007	21	81016	28.42	27.78	272.448	0.002	451	3,456	0.13	2.2	-1.324
81026TO84061	8	84062	112.12	107.52	65.08	0.071	19	1,446	0.01	3.2	-0.613
81061TO84060	8	84061	107.52	106.22	102.243	0.013	19	613	0.03	1.8	-0.587
81073TO84072	8	84073	112.07	92.12	125.045	0.16	-	2,172	-	0.0	-0.667
81081TO84080	8	84081	41.62	39.93	271.977	0.006	93	429	0.22	2.2	-0.455
82001TO81011	21	82001	22.62	20.37	52	0.043	451	14,833	0.03	6.2	-1.541
82002TO81012	10	82002	24.18	23.37	55	0.015	-	1,197	-	0.0	-0.833
82003TO82002	10	82003	26.24	24.18	165	0.012	-	1,102	-	0.0	-0.833
82004TO82003	8	82004	27.19	26.24	150.543	0.006	-	432	-	0.0	-0.667
82005TO82003	8	82005	28.29	26.24	233.03	0.009	-	510	-	0.0	-0.667
82007TO81012	21	82007	26.94	23.37	378.4	0.009	451	6,926	0.07	3.6	-1.448

Bothell Sewer Comprehensive Plan
Sewer Model Results (Buildout Scenario)

Pipe ID	Diameter (in.)	Upstream MH	From Invert (ft)	To Invert (ft)	Length (ft)	Slope	Max Flow (gpm)	Capacity (gpm)	Max q/Q	Max Velocity (fps)	Upstream Max. Surcharge (ft)
82008TO82007	8	82008	28.96	26.94	173.94	0.012	-	586	-	0.0	-0.667
82010TO1730	8	82010	17.23	17.12	10.923	0.01	289	553	0.52	3.6	-0.325
82013TO82010	8	82013	17.61	17.33	26.723	0.01	269	555	0.49	3.5	-0.339
82017TO3014	8	82017	28.12	27.77	11.662	0.03	269	942	0.29	5.2	-0.423
82018TO82017	8	82018	29.22	28.22	80	0.013	-	608	-	0.0	-0.667
82019TO82018	8	82019	30.52	29.32	113.914	0.011	-	558	-	0.0	-0.667
82020TO2106	8	82020	41.71	39.54	252.539	0.009	-	505	-	0.0	-0.667
82021TO82017	10	82021	29.72	28.12	422.323	0.004	-	607	-	0.0	-0.833
82022TO82021	8	82022	31.33	29.77	379.462	0.004	-	349	-	0.0	-0.667
82023TO82022	8	82023	32.79	31.38	340	0.004	-	350	-	0.0	-0.667
82024TO82025	8	82024	34.08	33.76	246.224	0.001	-	196	-	0.0	-0.667
82025TO82026	8	82025	33.76	33.52	360.446	0.001	-	140	-	0.0	-0.667
82026TO82023	8	82026	33.52	32.84	165	0.004	-	349	-	0.0	-0.667
82027TO82026	8	82027	36.82	33.62	193	0.017	-	700	-	0.0	-0.667
82028TO82027	8	82028	39.52	36.92	249.71	0.01	-	555	-	0.0	-0.667
82029TO82020	8	82029	43.27	41.76	174.833	0.009	-	505	-	0.0	-0.667
82030TO82029	8	82030	44.57	43.32	145.531	0.009	-	505	-	0.0	-0.667
82031TO82030	8	82031	64.12	44.62	132	0.148	-	2,090	-	0.0	-0.667
82032TO82031	8	82032	102.62	64.12	96	0.401	-	3,444	-	0.0	-0.667
82033TO82032	8	82033	137.62	102.62	65	0.538	-	3,990	-	0.0	-0.667
82034TO82033	8	82034	172.12	137.62	100	0.345	-	3,194	-	0.0	-0.667
82035TO82034	8	82035	184.17	172.12	203.881	0.059	-	1,322	-	0.0	-0.667
82036TO82035	8	82036	190.08	184.17	285.94	0.021	-	782	-	0.0	-0.667
82037TO82036	8	82037	191.92	190.08	298.021	0.006	-	427	-	0.0	-0.667
82038TO82037	8	82038	201.43	192.02	284.01	0.033	-	990	-	0.0	-0.667
82039TO82038	8	82039	210.71	201.43	69.826	0.133	-	1,982	-	0.0	-0.667
82040TO82039	8	82040	212.04	210.71	281	0.005	-	374	-	0.0	-0.667
83001TO83008	8	83001	230.02	229.87	110	0.001	-	201	-	0.0	-0.667
83002TO83001	8	83002	234.12	230.02	103.647	0.04	-	1,082	-	0.0	-0.667
83003TO83002	8	83003	242.12	234.22	77.173	0.102	-	1,740	-	0.0	-0.667
83004TO83003	8	83004	261.51	242.22	112.514	0.171	-	2,252	-	0.0	-0.667
83005TO83004	8	83005	274.12	261.61	167	0.075	-	1,488	-	0.0	-0.667

Bothell Sewer Comprehensive Plan
Sewer Model Results (Buildout Scenario)

Pipe ID	Diameter (in.)	Upstream MH	From Invert (ft)	To Invert (ft)	Length (ft)	Slope	Max Flow (gpm)	Capacity (gpm)	Max q/Q	Max Velocity (fps)	Upstream Max. Surcharge (ft)
83008TO83009	8	83008	229.87	222.22	133	0.058	-	1,304	-	0.0	-0.667
83009TO83011	8	83009	222.22	193.42	215.247	0.134	-	1,989	-	0.0	-0.667
83010TO84073	8	83010	177.52	112.07	302	0.217	-	2,532	-	0.0	-0.667
83011TO83010	8	83011	193.42	177.52	102	0.156	-	2,147	-	0.0	-0.667
83012TO83011	8	83012	207.62	193.42	60.883	0.233	-	2,626	-	0.0	-0.667
83013TO83012	8	83013	240.62	207.62	136	0.243	-	2,679	-	0.0	-0.667
83014TO83013	8	83014	251.07	241.47	75	0.128	-	1,946	-	0.0	-0.667
83015TO83014	8	83015	275.91	251.07	57.121	0.435	-	3,586	-	0.0	-0.667
83016TO83015	8	83016	278.42	275.91	72	0.035	-	1,015	-	0.0	-0.667
83018TO83016	8	83018	280.40	278.42	114	0.017	-	717	-	0.0	-0.667
83019TO83018	8	83019	294.12	280.40	138.191	0.099	-	1,713	-	0.0	-0.667
83020TO83019	8	83020	299.21	294.12	105.78	0.048	-	1,193	-	0.0	-0.667
83021TO83020	8	83021	300.72	299.21	99.675	0.015	-	669	-	0.0	-0.667
83022TO83014	8	83022	277.42	251.07	146.548	0.18	-	2,306	-	0.0	-0.667
83023TO83022	8	83023	300.92	277.42	147	0.16	-	2,174	-	0.0	-0.667
83024TO83023	8	83024	317.59	300.92	257	0.065	-	1,385	-	0.0	-0.667
83025TO83024	8	83025	319.25	317.59	106.507	0.016	-	679	-	0.0	-0.667
83026TO83024	8	83026	337.98	317.59	185.123	0.11	-	1,805	-	0.0	-0.667
83027TO2117	8	83027	335.30	325.76	176.245	0.054	-	1,265	-	0.0	-0.667
83028TO83027	8	83028	344.41	335.30	42.527	0.214	-	2,517	-	0.0	-0.667
83029TO83028	8	83029	353.33	344.41	97.569	0.091	-	1,644	-	0.0	-0.667
83030TO83029	8	83030	363.33	353.33	55.722	0.179	-	2,304	-	0.0	-0.667
83031TO83030	8	83031	378.59	363.49	115.278	0.131	-	1,968	-	0.0	-0.667
83032TO83031	8	83032	384.42	378.59	79.021	0.074	-	1,477	-	0.0	-0.667
83033TO83032	8	83033	386.49	384.42	82.271	0.025	-	863	-	0.0	-0.667
83034TO83033	8	83034	388.62	386.49	82.579	0.026	-	873	-	0.0	-0.667
83035TO83034	8	83035	403.51	388.62	281.688	0.053	-	1,250	-	0.0	-0.667
83036TO83027	8	83036	358.77	335.30	128.396	0.183	-	2,325	-	0.0	-0.667
83037TO83036	8	83037	371.42	358.77	98.299	0.129	-	1,951	-	0.0	-0.667
83038TO83037	8	83038	423.82	371.42	357.809	0.146	-	2,081	-	0.0	-0.667
83039TO83038	8	83039	432.42	423.82	96.938	0.089	-	1,620	-	0.0	-0.667
83040TO83039	8	83040	437.93	432.42	120.156	0.046	-	1,165	-	0.0	-0.667

Bothell Sewer Comprehensive Plan
Sewer Model Results (Buildout Scenario)

Pipe ID	Diameter (in.)	Upstream MH	From Invert (ft)	To Invert (ft)	Length (ft)	Slope	Max Flow (gpm)	Capacity (gpm)	Max q/Q	Max Velocity (fps)	Upstream Max. Surcharge (ft)
83041TO83040	8	83041	449.20	437.93	265.668	0.042	-	1,120	-	0.0	-0.667
83042TO83041	8	83042	456.46	449.20	222.99	0.033	-	981	-	0.0	-0.667
83044TO83045	8	83044	50.56	38.20	371.029	0.033	-	993	-	0.0	-0.667
83045TO83046	8	83045	38.10	37.87	71.511	0.003	20	308	0.06	1.1	-0.552
83046TO82010	8	83046	37.77	23.27	144.07	0.101	20	1,725	0.01	3.7	-0.616
83047TO1611	8	83047	41.70	40.48	136.177	0.009	-	515	-	0.0	-0.667
84001TO71096	8	84001	77.01	52.52	331.29	0.074	-	1,479	-	0.0	-0.667
84002TO3005	8	84002	60.01	59.28	35	0.021	13	785	0.02	1.9	-0.608
84003TO84002	8	84003	73.23	60.01	154.993	0.085	13	1,588	0.01	3.0	-0.624
84004TO84003	8	84004	80.58	73.23	326.031	0.023	13	816	0.02	1.9	-0.609
84007TO2019	8	84007	46.62	40.56	278.01	0.022	24	803	0.03	2.3	-0.587
84008TO84007	8	84008	64.87	46.72	299.166	0.061	12	1,339	0.01	2.6	-0.622
84009TO84008	8	84009	82.42	64.97	287.626	0.061	12	1,339	0.01	2.6	-0.622
84010TO84009	8	84010	82.62	82.42	171.325	0.001	12	186	0.06	0.7	-0.553
84012TO84013	12	84012	30.52	29.04	349.344	0.004	90	1,044	0.09	1.8	-0.802
84013TO84014	12	84013	29.04	26.62	71.5	0.034	90	2,950	0.03	3.8	-0.88
84015TO84017	12	84015	26.42	22.55	170	0.023	660	2,419	0.27	5.8	-0.644
84017TO84018	12	84017	22.55	7.62	11.052	1.351	660	18,635	0.04	24.9	-0.872
84018TO84025	36	84018	1.14	0.50	638	0.001	3,845	9,492	0.41	2.8	-1.793
84019TO84018	12	84019	9.52	7.62	14.437	0.132	1,285	5,816	0.22	13.2	-0.693
84020TO84019	24	84020	10.94	9.62	513.711	0.003	1,365	5,163	0.26	3.1	-1.346
84021TO84020	24	84021	12.60	11.04	418	0.004	1,397	6,227	0.22	3.6	-1.398
84022TO84021	24	84022	13.58	12.70	235.114	0.004	1,411	6,225	0.23	3.6	-1.413
84023TO84022	24	84023	14.57	13.68	237	0.004	1,413	6,225	0.23	3.6	-1.367
84024TO84018	36	84024	1.27	1.24	31	0.001	1,936	9,492	0.20	2.3	-1.923
84025TO84026	36	84025	0.40	-0.04	439	0.001	3,831	9,492	0.40	2.8	-1.723
84026TO71086	36	84026	-0.14	-0.42	279	0.001	3,831	9,492	0.40	2.8	-1.779
84027TO84012	8	84027	45.52	37.23	88.43	0.094	90	1,665	0.05	5.7	-0.562
84028TO84027	8	84028	47.62	45.52	255	0.008	90	493	0.18	2.4	-0.474
84029TO84028	8	84029	54.21	47.62	158	0.042	90	1,111	0.08	4.3	-0.539
84030TO84029	8	84030	61.22	54.31	168	0.041	90	1,103	0.08	4.2	-0.538
84031TO84030	8	84031	76.12	61.22	182	0.082	90	1,556	0.06	5.4	-0.558

Bothell Sewer Comprehensive Plan
Sewer Model Results (Buildout Scenario)

Pipe ID	Diameter (in.)	Upstream MH	From Invert (ft)	To Invert (ft)	Length (ft)	Slope	Max Flow (gpm)	Capacity (gpm)	Max q/Q	Max Velocity (fps)	Upstream Max. Surcharge (ft)
84032TO84031	8	84032	76.52	76.12	188.308	0.002	90	251	0.36	1.5	-0.391
84033TO84032	8	84033	76.92	76.52	178.495	0.002	90	257	0.35	1.5	-0.395
84034TO84033	8	84034	78.12	76.92	322.286	0.004	59	332	0.18	1.6	-0.476
84035TO84034	8	84035	82.12	78.12	211.38	0.019	-	748	-	0.0	-0.667
84036TO84035	8	84036	87.22	82.12	277.467	0.018	-	737	-	0.0	-0.667
84037TO84035	8	84037	86.20	82.12	77.353	0.053	-	1,249	-	0.0	-0.667
84038TO84038	8	84038	99.72	86.20	256.004	0.053	-	1,250	-	0.0	-0.667
84043TO84034	8	84043	78.72	78.12	277.631	0.002	49	253	0.20	1.3	-0.467
84045TO84043	8	84045	79.62	78.72	110.021	0.008	50	492	0.10	2.0	-0.524
84046TO2099	8	84046	81.49	80.92	33.182	0.017	50	713	0.07	2.6	-0.548
84047TO84046	8	84047	82.28	81.59	323.5	0.002	-	251	-	0.0	-0.667
84048TO2082	8	84048	84.72	82.62	321.091	0.007	-	440	-	0.0	-0.667
84050TO84048	8	84050	85.82	84.82	385.996	0.003	-	277	-	0.0	-0.667
84052TO84038	8	84052	104.92	99.72	305.796	0.017	-	709	-	0.0	-0.667
84054TO3019	8	84054	78.82	77.62	104.819	0.011	19	582	0.03	1.7	-0.585
84055TO84054	8	84055	96.63	78.92	330.646	0.054	19	1,259	0.01	2.9	-0.61
84056TO84055	8	84056	97.82	96.63	241.102	0.005	19	382	0.05	1.3	-0.566
84057TO84056	8	84057	98.98	97.82	89.525	0.013	19	619	0.03	1.8	-0.587
84058TO84057	8	84058	102.32	98.98	257	0.013	19	620	0.03	1.8	-0.587
84059TO84058	8	84059	105.02	102.32	58.783	0.046	19	1,165	0.02	2.8	-0.608
84060TO84059	8	84060	106.22	105.02	87.742	0.014	19	636	0.03	1.8	-0.588
84063TO84061	8	84063	107.62	107.52	101.082	0.001	-	171	-	0.0	-0.667
84064TO84063	8	84064	109.52	107.62	100.015	0.019	-	750	-	0.0	-0.667
84067TO84066	8	84067	22.52	19.62	34.826	0.083	383	1,569	0.24	8.3	-0.442
84069TO2094	8	84069	31.87	29.72	81	0.027	290	886	0.33	5.1	-0.404
84070TO84069	8	84070	34.62	31.87	122.896	0.022	290	813	0.36	4.8	-0.392
84071TO84070	8	84071	52.12	40.11	103.856	0.116	-	1,849	-	0.0	-0.667
84072TO84071	8	84072	92.12	52.12	263.276	0.152	-	2,120	-	0.0	-0.667
84074TO84067	8	84074	24.62	22.62	33	0.061	93	1,339	0.07	4.9	-0.548
84075TO84074	8	84075	26.75	24.72	354.26	0.006	93	412	0.23	2.1	-0.451
84075TO84075	8	84076	27.84	26.85	132.627	0.007	93	470	0.20	2.3	-0.466
84076TO2001	8	2001	29.08	27.94	153.58	0.007	93	469	0.20	2.3	-0.465

Bothell Sewer Comprehensive Plan
Sewer Model Results (Buildout Scenario)

Pipe ID	Diameter (in.)	Upstream MH	From Invert (ft)	To Invert (ft)	Length (ft)	Slope	Max Flow (gpm)	Capacity (gpm)	Max q/Q	Max Velocity (fps)	Upstream Max. Surcharge (ft)
84078TO84077	8	84078	31.70	29.70	269.457	0.007	93	469	0.20	2.3	-0.465
84078TO84079	8	84079	33.01	31.80	163.082	0.007	93	468	0.20	2.3	-0.465
84080TO84079	8	84080	39.83	33.11	59.622	0.113	93	1,826	0.05	6.1	-0.564
84082TO84081	8	84082	57.62	41.62	414.807	0.039	93	1,068	0.09	4.2	-0.533
84083TO84082	8	84083	66.12	57.62	121.5	0.07	93	1,438	0.06	5.2	-0.552
84084TO84079	8	84084	34.62	33.11	189.489	0.008	-	485	-	0.0	-0.667
84085TO84084	8	84085	36.60	34.62	399.103	0.005	-	383	-	0.0	-0.667
84087TO84080	8	84087	41.62	39.93	234.642	0.007	-	462	-	0.0	-0.667
84088TO84033	8	84088	80.62	77.02	282.777	0.013	12	614	0.02	1.5	-0.602
84090TO84088	8	84090	83.62	80.72	208	0.014	12	642	0.02	1.6	-0.604
84091TO84019	8	84091	28.42	17.20	77.142	0.145	-	2,074	-	0.0	-0.667
895TO2062	10	71067	44.10	42.38	65	0.026	67	1,604	0.04	3.2	-0.717
907TO2070	8	71037	49.65	40.00	325	0.03	-	937	-	0.0	-0.667
91001TO91002	8	91001	173.35	171.09	86.766	0.026	-	878	-	0.0	-0.667
91002TO91003	8	91002	171.09	167.16	90.085	0.044	19	1,136	0.02	2.7	-0.606
91003TO91004	8	91003	167.16	152.97	203.329	0.07	19	1,437	0.01	3.2	-0.612
91004TO91006	8	91004	152.87	151.17	233.464	0.007	19	464	0.04	1.5	-0.574
91006TO91007	8	91006	151.07	150.62	260.556	0.002	19	226	0.09	0.9	-0.535
91007TO91019	8	91007	150.52	149.52	266.07	0.004	50	333	0.15	1.5	-0.493
91008TO91009	8	91008	190.81	180.62	151.809	0.067	-	1,409	-	0.0	-0.667
91009TO91010	8	91009	180.62	179.82	145.468	0.005	30	403	0.07	1.5	-0.543
91010TO91011	8	91010	179.82	176.65	85.487	0.037	30	1,047	0.03	3.0	-0.589
91011TO91007	8	91011	176.65	151.12	235.307	0.108	30	1,791	0.02	4.3	-0.607
91012TO91011	8	91012	186.69	176.65	179.365	0.056	-	1,287	-	0.0	-0.667
91013TO91014	8	91013	160.44	132.61	318.268	0.087	12	1,608	0.01	3.0	-0.625
91014TO91015	8	91014	132.61	122.22	205.179	0.051	12	1,224	0.01	2.5	-0.62
91015TO91022	8	91015	122.02	120.22	400	0.005	83	365	0.23	1.9	-0.451
91016TO91015	8	91016	123.88	122.22	154.088	0.011	71	564	0.13	2.5	-0.508
91018TO91019	8	91018	153.84	149.52	290	0.015	-	664	-	0.0	-0.667
91019TO91020	8	91019	149.52	125.42	323.117	0.075	50	1,485	0.03	4.4	-0.583
91020TO91023	8	91020	125.43	119.65	190	0.03	50	948	0.05	3.2	-0.563
91021TO91020	8	91021	128.19	125.43	170.833	0.016	-	691	-	0.0	-0.667

Bothell Sewer Comprehensive Plan
Sewer Model Results (Buildout Scenario)

Pipe ID	Diameter (in.)	Upstream MH	From Invert (ft)	To Invert (ft)	Length (ft)	Slope	Max Flow (gpm)	Capacity (gpm)	Max q/Q	Max Velocity (fps)	Upstream Max. Surcharge (ft)
91022TO91023	8	91022	120.12	119.65	74.501	0.006	83	432	0.19	2.1	-0.469
91023TO91046	8	91023	119.50	116.04	57	0.061	132	1,340	0.10	5.5	-0.525
91024TO91025	8	91024	88.02	76.31	144	0.081	132	1,551	0.09	6.0	-0.535
91025TO91026	8	91025	76.31	64.12	154.514	0.079	139	1,527	0.09	6.1	-0.531
91026TO91027	8	91026	64.02	53.72	134.133	0.077	139	1,507	0.09	6.0	-0.53
91027TO91028	8	91027	53.62	39.72	225.48	0.062	139	1,350	0.10	5.6	-0.523
91028TO91029	12	91028	39.62	27.22	400	0.031	139	2,823	0.05	4.2	-0.849
91029TO91037	12	91029	27.12	25.72	156.327	0.009	139	1,517	0.09	2.7	-0.796
91030TO1642	12	91030	24.42	22.75	263.454	0.006	139	1,277	0.11	2.4	-0.778
91031TO94004	12	91031	22.32	19.53	437.133	0.006	478	1,281	0.37	3.4	-0.579
91032TO94005	36	91032	10.41	9.94	469	0.001	-	9,492	-	0.0	-3
91037TO91030	12	91037	25.62	24.52	243.373	0.005	139	1,078	0.13	2.1	-0.758
91041TO91024	8	91041	94.12	88.12	155.803	0.039	132	1,067	0.12	4.6	-0.508
91042TO91041	8	91042	98.02	94.22	154.291	0.025	132	853	0.16	4.0	-0.49
91043TO91042	8	91043	102.12	98.12	141.276	0.028	132	915	0.14	4.2	-0.496
91044TO91043	8	91044	113.42	102.12	176.268	0.064	132	1,377	0.10	5.6	-0.527
91046TO91044	8	91046	115.94	113.51	84.214	0.029	132	924	0.14	4.2	-0.496
929TO71086	18	SMH929	17.11	16.81	30	0.01	205	4,727	0.04	3.0	-1.287
93001TO94015	8	93001	106.47	81.68	321.692	0.077	227	1,510	0.15	6.9	-0.492
93003TO93001	8	93003	119.42	106.57	165.4	0.078	227	1,516	0.15	7.0	-0.493
93004TO93003	8	93004	158.45	119.52	267	0.146	227	2,076	0.11	8.7	-0.518
93005TO93004	8	93005	185.80	158.55	175.934	0.155	28	2,140	0.01	4.8	-0.613
93006TO93005	8	93006	196.39	185.80	201.814	0.052	28	1,246	0.02	3.3	-0.597
93007TO93006	8	93007	206.88	196.49	200	0.052	28	1,239	0.02	3.3	-0.597
93008TO93007	8	93008	213.64	206.88	208.708	0.032	28	979	0.03	2.8	-0.589
93009TO93008	8	93009	217.09	213.74	106.023	0.032	28	967	0.03	2.7	-0.589
93010TO93009	8	93010	232.00	217.09	141.706	0.105	28	1,764	0.02	4.2	-0.608
93014TO93015	8	93014	243.63	241.63	207.955	0.01	-	533	-	0.0	-0.667
93015TO93016	8	93015	241.61	235.88	209.012	0.027	-	900	-	0.0	-0.667
93016TO93010	8	93016	235.88	232.00	232.326	0.017	28	703	0.04	2.2	-0.576
93018TO93016	8	93018	246.11	235.88	125	0.082	28	1,556	0.02	3.8	-0.604
93019TO93018	8	93019	260.36	246.11	210	0.068	28	1,417	0.02	3.6	-0.602

Bothell Sewer Comprehensive Plan
Sewer Model Results (Buildout Scenario)

Pipe ID	Diameter (in.)	Upstream MH	From Invert (ft)	To Invert (ft)	Length (ft)	Slope	Max Flow (gpm)	Capacity (gpm)	Max q/Q	Max Velocity (fps)	Upstream Max. Surcharge (ft)
93021TO93004	8	93021	190.07	158.45	303.069	0.104	198	1,757	0.11	7.4	-0.515
93023TO93021	8	93023	211.74	190.07	232.901	0.093	198	1,659	0.12	7.1	-0.511
93025TO93023	8	93025	212.17	211.74	184.111	0.002	198	263	0.76	1.8	-0.234
93026TO93025	8	93026	234.97	212.17	267.973	0.085	46	1,586	0.03	4.5	-0.589
93027TO93026	8	93027	260.92	235.07	218.244	0.118	46	1,872	0.02	5.0	-0.595
93029TO93027	8	93029	262.02	260.92	142.815	0.008	46	477	0.10	1.9	-0.527
93030TO93029	8	93030	262.62	262.02	87.363	0.007	46	451	0.10	1.8	-0.523
93031TO93030	8	93031	264.57	262.62	128.709	0.015	38	669	0.06	2.3	-0.559
93032TO93031	8	93032	268.89	264.57	275.57	0.016	15	681	0.02	1.8	-0.599
93033TO93032	8	93033	271.77	268.89	190	0.015	15	670	0.02	1.7	-0.598
93034TO93033	8	93034	274.70	271.77	245	0.012	15	595	0.02	1.6	-0.594
93035TO93034	8	93035	275.62	274.70	195	0.005	-	374	-	0.0	-0.667
93036TO93037	8	93036	298.94	295.54	91.173	0.037	-	1,050	-	0.0	-0.667
93037TO93038	8	93037	295.54	288.57	120	0.058	-	1,311	-	0.0	-0.667
93038TO93034	8	93038	288.57	274.70	120	0.116	-	1,849	-	0.0	-0.667
93039TO93038	8	93039	295.89	288.57	153.276	0.048	-	1,188	-	0.0	-0.667
93040TO93039	8	93040	306.19	295.89	173	0.06	-	1,327	-	0.0	-0.667
93041TO93031	8	93041	277.63	264.57	200	0.065	-	1,390	-	0.0	-0.667
93042TO93041	8	93042	302.46	277.63	277.106	0.09	-	1,628	-	0.0	-0.667
93043TO93031	8	93043	269.19	264.57	94.395	0.049	24	1,203	0.02	3.0	-0.602
93044TO93043	8	93044	269.90	269.19	52.241	0.014	24	634	0.04	1.9	-0.579
93045TO93044	8	93045	270.07	269.90	97	0.002	24	228	0.10	0.9	-0.522
93046TO93045	8	93046	278.91	270.07	135.627	0.065	24	1,388	0.02	3.3	-0.606
93047TO93046	8	93047	297.06	278.91	141.761	0.128	-	1,946	-	0.0	-0.667
93048TO93047	8	93048	307.41	297.06	404.257	0.026	-	870	-	0.0	-0.667
93049TO93048	8	93049	311.38	307.41	146.34	0.027	-	896	-	0.0	-0.667
93050TO93049	8	93050	312.93	311.38	195.263	0.008	-	485	-	0.0	-0.667
93051TO93046	8	93051	279.96	278.91	342.933	0.003	24	301	0.08	1.1	-0.541
93052TO93051	8	93052	283.06	280.06	250	0.012	24	596	0.04	1.8	-0.576
93054TO93052	8	93054	283.60	283.06	197.467	0.003	24	284	0.08	1.1	-0.537
93055TO93054	8	93055	302.55	283.60	158.507	0.12	-	1,880	-	0.0	-0.667
93056TO93054	8	93056	285.04	283.60	279.539	0.005	24	390	0.06	1.4	-0.556

Bothell Sewer Comprehensive Plan
Sewer Model Results (Buildout Scenario)

Pipe ID	Diameter (in.)	Upstream MH	From Invert (ft)	To Invert (ft)	Length (ft)	Slope	Max Flow (gpm)	Capacity (gpm)	Max q/Q	Max Velocity (fps)	Upstream Max. Surcharge (ft)
93057TO93056	8	93057	307.47	285.04	207.228	0.108	-	1,789	-	0.0	-0.667
93058TO93057	8	93058	309.84	307.47	97.227	0.024	-	849	-	0.0	-0.667
93059TO93025	8	93059	213.27	212.17	190.718	0.006	130	413	0.31	2.3	-0.41
93060TO93059	8	93060	228.24	213.37	146.263	0.102	-	1,734	-	0.0	-0.667
93061TO93059	8	93061	213.67	213.37	169.224	0.002	130	229	0.57	1.5	-0.307
93062TO93061	8	93062	222.32	213.77	160.368	0.053	130	1,256	0.10	5.2	-0.522
93063TO93062	8	93063	229.02	222.42	165	0.04	111	1,088	0.10	4.5	-0.523
93064TO93063	8	93064	231.62	229.12	123	0.02	111	775	0.14	3.5	-0.496
93065TO1573	8	93065	245.87	236.06	209	0.047	90	1,178	0.08	4.4	-0.542
93066TO2040	8	93066	261.28	260.34	20	0.047	67	1,179	0.06	4.1	-0.559
93067TO93066	8	93067	262.96	261.38	48.34	0.033	60	983	0.06	3.5	-0.555
93068TO93067	8	93068	271.45	262.96	181.268	0.047	60	1,177	0.05	3.9	-0.565
93069TO93068	8	93069	273.96	271.50	135.066	0.018	8	734	0.01	1.5	-0.618
93070TO93069	8	93070	299.57	273.96	188.553	0.136	8	2,004	0.00	3.1	-0.637
93072TO93068	8	93072	284.62	271.48	321.237	0.041	52	1,100	0.05	3.6	-0.568
93073TO93072	8	93073	290.13	284.62	141.829	0.039	28	1,072	0.03	3.0	-0.592
93074TO93073	8	93074	291.16	290.12	76.906	0.014	28	632	0.05	2.0	-0.57
93075TO93074	8	93075	310.69	291.16	353.182	0.055	15	1,279	0.01	2.7	-0.616
930TO929	12	SMH930	18.10	17.82	13	0.022	205	2,353	0.09	4.1	-0.801
94003TO1718	36	94003	9.44	8.56	874	0.001	844	9,492	0.09	1.8	-2.397
94004TO94003	12	94004	19.43	19.22	66	0.003	478	904	0.53	2.6	-0.486
94005ATO42040	8	94005A	155.11	131.82	145	0.161	171	2,179	0.08	8.3	-0.541
94005TO94003	36	94005	9.84	9.54	305	0.001	366	9,492	0.04	1.4	-2.598
94006TO94008	8	94006	47.12	39.48	355	0.022	-	798	-	0.0	-0.667
94008TO2059	12	94008	39.48	39.43	17	0.003	270	870	0.31	2.2	-0.618
94009TO94008	8	94009	41.12	39.48	250	0.007	270	440	0.61	3.0	-0.29
94010TO94009	8	94010	46.38	41.12	320.679	0.016	270	696	0.39	4.2	-0.379
94011TO94010	8	94011	47.12	46.38	127	0.006	-	415	-	0.0	-0.667
94012TO94010	8	94012	53.12	46.38	203	0.033	227	991	0.23	5.1	-0.45
94013TO94012	8	94013	63.12	53.12	97.158	0.103	227	1,745	0.13	7.7	-0.505
94015TO94013	8	94015	81.58	63.12	201.885	0.091	227	1,644	0.14	7.4	-0.5
94017TO94018	12	94017	36.00	35.95	126.316	0	282	319	0.88	1.0	-0.272

Bothell Sewer Comprehensive Plan
Sewer Model Results (Buildout Scenario)

Pipe ID	Diameter (in.)	Upstream MH	From Invert (ft)	To Invert (ft)	Length (ft)	Slope	Max Flow (gpm)	Capacity (gpm)	Max q/Q	Max Velocity (fps)	Upstream Max. Surcharge (ft)
94018TO94020	12	94018	35.95	35.08	374.508	0.002	282	773	0.36	2.0	-0.583
94019TO94018	8	94019	44.72	35.95	45.174	0.194	-	2,396	-	0.0	-0.667
94020TO94021	12	94020	35.08	34.32	101.661	0.007	282	1,386	0.20	3.1	-0.695
94021TO94022	12	94021	34.32	32.10	226.564	0.01	282	1,587	0.18	3.4	-0.716
94022TO94030	12	94022	32.10	31.11	68.269	0.015	366	1,931	0.19	4.2	-0.705
94023TO94022	12	94023	46.42	32.41	42.518	0.33	86	9,204	0.01	8.2	-0.932
94030TO2072	12	94030	31.01	26.19	285.945	0.017	366	2,081	0.18	4.4	-0.716
94031TO94030	12	94031	31.73	31.11	186.899	0.003	-	923	-	0.0	-1
TO_LS1_WW	10	72024	20.64	21.58	10	-0.094	505	505	1.00	2.1	0.966
TO_LS2_WW	8	84066	19.62	19.52	10	0.01	383	544	0.70	3.8	-0.254
TO_LS3_WW	8	1730	17.12	17.02	10	0.01	289	544	0.53	3.5	-0.321
TO_LS4_WW	8	323013	293.62	293.52	10	0.01	5	544	0.01	1.1	-0.62

APPENDIX F

CAPITAL IMPROVEMENT PROGRAM
DETAILED COST ESTIMATES

BOTHELL SEWER COMP PLAN ASSUMPTIONS FOR COST ESTIMATES

Tax rate		10	%
Contingency		20	%
Engineering and Administrative Costs		30	%
Mobilization, Cleanup and Demobilization		10%	of subtotal without tax and contingency (round to $1000)
PIPING			
4 -inch PVC Sewer Pipe, Including Fittings	$	40	=UNIT PRICE
6 -inch PVC Sewer Pipe, Including Fittings	$	50	=UNIT PRICE
8 -inch PVC Sewer Pipe, Including Fittings	$	70	=UNIT PRICE
10 -inch PVC Sewer Pipe, Including Fittings	$	100	=UNIT PRICE
12 -inch PVC Sewer Pipe, Including Fittings	$	120	=UNIT PRICE
18 -inch PVC Sewer Pipe, Including Fittings	$	150	=UNIT PRICE
21 -inch PVC Sewer Pipe, Including Fittings	$	180	=UNIT PRICE
8" DI Force Main, Includes Fitiings	$	100	=UNIT PRICE
10" DI Force Main, Includes Fittings	$	140	=UNIT PRICE
8" DI Deep Sewer Pipe, Includes Fittings	$	120	=UNIT PRICE
10" DI Deep Sewer Pipe, Includes Fittings	$	150	=UNIT PRICE
Side Sewer	$	3,000	=UNIT PRICE (Estimated at 60 foot intervals)
Cured-in-Place Pipe	$	120	=LF
MANHOLES & WELLS			
48" Manhole	$	6,000	=UNIT PRICE (Estimated at 300 foot intervals)
48" Manhole, Extra Depth	$	250	=VF
48" Manhole Rehabilitation	$	800	=UNIT PRICE
SITE CONTROL			
Fences & Gates	$	40	=UNIT PRICE
Locate Existing Utilities		3%	=LUMP SUM
Erosion Control		1%	=LUMP SUM
Bypass Pumping		2%	=LUMP SUM
EXCAVATION & PAVEMENT			
Trench Safety Systems		2%	of subtotal without tax and contingency (round to $1000)

TRENCH WIDTH	PIPE SIZE	WIDTH (ft)
	4	2.5
	6	2.5
	8	3.0
	10	3.5
	12	3.5
	16	4.0
	18	4.5
	21	5

LANE WIDTH WIDTH (ft) 12.0

	MATL DEPTH (feet)	UNT WEIGHT (TN/CY)	EXTRA MATL FACTOR	FRACTION OF LENGTH	PRODUCT
Gravel Backfill	12.00	1.0	1.1	1.00	0.489 * Trench Width = CY/LF
Cost per TN	$ 30.00				
CDF	4.00	1.0	1.1	1.00	0.163 * Trench Width = CY/LF
Cost per CY	$ 150.00				
Foundation Material	0.50	1.8	1.1	1.00	0.037 * Trench Width = TN/LF
Cost per CY	$ 40.00				
Asphalt Concrete Pavement Repair	NA	NA	NA	NA	0.222 * Lane Width = SQ YD/LF
Cost per SQ YD	$ 25.00				
Crushed Surfacing, Top Course	0.17	1.8	1.1	1.00	0.012 * Lane Width = TN/LF
Cost per TN	$ 30.00				
Asphalt Concrete Paving Class B	0.25	1.800	1.1	1.00	0.018 * Trench Width = TN/LF
Cost per TN	$ 120.00				
Traffic Control	$ 80	EA	16	HRS per	100 feet

CITY OF BOTHELL
PRELIMINARY PROJECT COST ESTIMATE
PROPOSED SYSTEM IMPROVEMENT GV-1
100th Avenue NE 10-inch Gravity Sewer Replacement

NO.	ITEM	QUANTITY	UNIT PRICE	AMOUNT
1	Mobilization, Cleanup, and Demobilization	LUMP SUM	$ 12,800	$ 12,800
2	Trench Safety Systems	LUMP SUM	$ 2,300	$ 2,300
3	Erosion Control	LUMP SUM	$ 1,200	$ 1,200
4	Locate Existing Utilities	LUMP SUM	$ 3,400	$ 3,400
5	Traffic Control	60 HR	$ 80	$ 4,800
6	Bypass Pumping	LUMP SUM	$ 2,300	$ 2,300
7	10" DI Deep Sewer Pipe, Includes Fittings	350 LF	$ 150	$ 52,500
8	Side Sewer	6 EA	$ 3,000	$ 17,400
9	48" Manhole	2 EA	$ 6,000	$ 13,200
10	Crushed Surfacing Top Course	20 TN	$ 30.00	$ 600
11	48" Manhole, Extra Depth	7 VF	$250	$ 1,750
12	Asphalt	80 TN	$ 120	$ 9,600
13	Gravel Backfill	600 TN	$ 30	$ 18,000
	Subtotal.....			$ 140,000
	Tax rate (10%)…...			14,000
	Subtotal:.....			$ 154,000
	Contingency (20%)…….			$ 31,000
	TOTAL ESTIMATED CONSTRUCTION COST:.....			$ 185,000
	Engineering and Administrative Costs (30%):.....			$ 56,000
	TOTAL ESTIMATED PROJECT COST:.....			$ 241,000

CITY OF BOTHELL
PRELIMINARY PROJECT COST ESTIMATE
PROPOSED SYSTEM IMPROVEMENT GV-2
NE 190th Street, NE 189th Place, NE 187th Street, 88th Avenue NE, and 89th Avenue NE Gravity Sewer Installation

NO.	ITEM	QUANTITY	UNIT PRICE	AMOUNT
1	Mobilization, Cleanup, and Demobilization	LUMP SUM	$ 37,500	$ 37,500
2	Trench Safety Systems	LUMP SUM	$ 6,600	$ 6,600
3	Erosion Control	LUMP SUM	$ 3,400	$ 3,400
4	Locate Existing Utilities	LUMP SUM	$ 9,900	$ 9,900
5	Traffic Control	250 HR	$ 80	$ 20,000
6	Bypass Pumping	LUMP SUM	$ 6,600	$ 6,600
7	8" Gravity Sewer Main	1,520 LF	$ 70	$ 106,400
8	Side Sewer	25 EA	$ 3,000	$ 75,900
9	48" Manhole	6 EA	$ 6,000	$ 36,600
10	Crushed Surfacing Top Course	60 TN	$ 30.00	$ 1,800
11	Asphalt	340 TN	$ 120	$ 40,800
12	Gravel Backfill	2,230 TN	$ 30	$ 66,900
	Subtotal.....			$ 413,000
	Tax rate (10%)…..……..…..…..……..…….			41,000
	Subtotal:.....			$ 454,000
	Contingency (20%)……..…...……..…….			$ 91,000
	TOTAL ESTIMATED CONSTRUCTION COST:.....			$ 545,000
	Engineering and Administrative Costs (30%):.....…....…			$ 164,000
	TOTAL ESTIMATED PROJECT COST:.....			$ 709,000

CITY OF BOTHELL
PRELIMINARY PROJECT COST ESTIMATE
PROPOSED SYSTEM IMPROVEMENT GV-3
Beardslee Place, Sunrise Drive and Valley View Street 8-inch Gravity Sewer Installation

NO.	ITEM	QUANTITY	UNIT PRICE	AMOUNT
1	Mobilization, Cleanup, and Demobilization	LUMP SUM	$ 47,700	$ 47,700
2	Trench Safety Systems	LUMP SUM	$ 8,400	$ 8,400
3	Erosion Control	LUMP SUM	$ 4,200	$ 4,200
4	Locate Existing Utilities	LUMP SUM	$ 12,600	$ 12,600
5	Traffic Control	320 HR	$ 80	$ 25,600
6	Bypass Pumping	LUMP SUM	$ 8,400	$ 8,400
7	8" Gravity Sewer Main	1,940 LF	$ 70	$ 135,800
8	Side Sewer	32 EA	$ 3,000	$ 96,900
9	48" Manhole	8 EA	$ 6,000	$ 45,000
10	Crushed Surfacing Top Course	80 TN	$ 30.00	$ 2,400
11	Asphalt	430 TN	$ 120	$ 51,600
12	Gravel Backfill	2,850 TN	$ 30	$ 85,500
	Subtotal.....			$ 525,000
	Tax rate (10%)…..……..…..…..……..…….			53,000
	Subtotal:.....			$ 578,000
	Contingency (20%)……..…...……..…….			$ 116,000
	TOTAL ESTIMATED CONSTRUCTION COST:.....			$ 694,000
	Engineering and Administrative Costs (30%):.....….....…			$ 208,000
	TOTAL ESTIMATED PROJECT COST:.....			$ 902,000

CITY OF BOTHELL
PRELIMINARY PROJECT COST ESTIMATE
PROPOSED SYSTEM IMPROVEMENT GV-4
NE 196st Street and SR 527 10-inch Gravity Sewer Replacement

NO.	ITEM	QUANTITY	UNIT PRICE	AMOUNT
1	Mobilization, Cleanup, and Demobilization	LUMP SUM	$ 8,400	$ 8,400
2	Trench Safety Systems	LUMP SUM	$ 1,500	$ 1,500
				$ -
3	Erosion Control	LUMP SUM	$ 800	$ 800
4	Locate Existing Utilities	LUMP SUM	$ 2,200	$ 2,200
5	Traffic Control	80 HR	$ 80	$ 6,400
6	Bypass Pumping	LUMP SUM	$ 1,500	$ 1,500
7	10" Gravity Sewer Main	250 LF	$ 100	$ 25,000
8	Side Sewer	4 EA	$ 3,000	$ 12,600
9	48" Manhole	2 EA	$ 6,000	$ 10,800
10	Crushed Surfacing Top Course	100 TN	$ 30.00	$ 3,000
11	Asphalt	60 TN	$ 120	$ 7,200
12	Gravel Backfill	430 TN	$ 30	$ 12,900
	Subtotal.....			$ 93,000
	Tax rate (10%)…..……..…..…..……..…….			9,000
	Subtotal:.....			$ 102,000
	Contingency (20%)……..…...……..…….			$ 20,000
	TOTAL ESTIMATED CONSTRUCTION COST:.....			$ 122,000
	Engineering and Administrative Costs (30%):.....….....…			$ 37,000
	TOTAL ESTIMATED PROJECT COST:.....			$ 159,000

CITY OF BOTHELL
PRELIMINARY PROJECT COST ESTIMATE
PROPOSED SYSTEM IMPROVEMENT GV-5
NE 186th Street and 98th Avenue NE Gravity 10-Inch Gravity Sewer Replacement and Waynita Drive 12-Inch Gravity Sewer Replacement

NO.	ITEM	QUANTITY	UNIT PRICE	AMOUNT
1	Mobilization, Cleanup, and Demobilization	LUMP SUM	$ 15,200	$ 15,200
2	Trench Safety Systems	LUMP SUM	$ 2,700	$ 2,700
3	Erosion Control	LUMP SUM	$ 1,400	$ 1,400
4	Locate Existing Utilities	LUMP SUM	$ 4,100	$ 4,100
5	Traffic Control	70 HR	$ 80	$ 5,600
6	Bypass Pumping	LUMP SUM	$ 2,700	$ 2,700
7	10" Gravity Sewer Main	310 LF	$ 100	$ 31,000
8	12" Gravity Sewer Main	120 LF	$ 180	$ 21,600
9	Side Sewer	7 EA	$ 3,000	$ 21,600
10	Crushed Surfacing Top Course	100 TN	$ 30.00	$ 3,000
11	48" Manhole	4 EA	$ 6,000	$ 26,400
12	Asphalt	100 TN	$ 120	$ 12,000
13	Gravel Backfill	640 TN	$ 30	$ 19,200
	Subtotal.....			$ 167,000
	Tax rate (10%)…..……..…..…..……..…….			17,000
	Subtotal:.....			$ 184,000
	Contingency (20%)……..…...…..……..…….			$ 37,000
	TOTAL ESTIMATED CONSTRUCTION COST:.....			$ 221,000
	Engineering and Administrative Costs (30%):.....….....…			$ 66,000
	TOTAL ESTIMATED PROJECT COST:.....			$ 287,000

CITY OF BOTHELL
PRELIMINARY PROJECT COST ESTIMATE
PROPOSED SYSTEM IMPROVEMENT GV-6
SR 522 18-INCH GRAVITY SEWER REPLACEMENT

NO.	ITEM	QUANTITY	UNIT PRICE	AMOUNT
1	Mobilization, Cleanup, and Demobilization	LUMP SUM	$ 10,600	$ 10,600
2	Trench Safety Systems	LUMP SUM	$ 1,800	$ 1,800
3	Erosion Control	LUMP SUM	$ 900	$ 900
4	Locate Existing Utilities	LUMP SUM	$ 2,600	$ 2,600
5	Traffic Control	160 HR	$ 80	$ 12,800
6	Bypass Pumping	LUMP SUM	$ 1,800	$ 1,800
7	18" Gravity Sewer Main	250 LF	$ 150	$ 37,500
8	Side Sewer	4 EA	$ 3,000	$ 12,600
9	48" Manhole	2 EA	$ 6,000	$ 10,800
10	Crushed Surfacing Top Course	20 TN	$ 30.00	$ 600
11	Asphalt	60 TN	$ 120	$ 7,200
12	Gravel Backfill	550 TN	$ 30	$ 16,500
	Subtotal.....			$ 116,000
	Tax rate (10%)…..……..…..…..……..…….			12,000
	Subtotal:.....			$ 128,000
	Contingency (20%)……..…...…..……..…….			$ 26,000
	TOTAL ESTIMATED CONSTRUCTION COST:.....			$ 154,000
	Engineering and Administrative Costs (30%):.....….....…			$ 46,000
	TOTAL ESTIMATED PROJECT COST:.....			$ 200,000

CITY OF BOTHELL
PRELIMINARY PROJECT COST ESTIMATE
PROPOSED SYSTEM IMPROVEMENT GV-9
Canyon Creek 8-inch Bypass Sewer and 126th Ave 10-Inch Gravity Sewer Replacement

NO.	ITEM	QUANTITY	UNIT PRICE	AMOUNT
1	Mobilization, Cleanup, and Demobilization	LUMP SUM	$ 22,700	$ 22,700
2	Trench Safety Systems	LUMP SUM	$ 4,000	$ 4,000
				$ -
3	Erosion Control	LUMP SUM	$ 2,000	$ 2,000
4	Locate Existing Utilities	LUMP SUM	$ 6,000	$ 6,000
5	Traffic Control	150 HR	$ 80	$ 12,000
6	Bypass Pumping	LUMP SUM	$ 4,000	$ 4,000
7	8" Gravity Sewer Main	300 LF	$ 70	$ 21,000
8	10" Gravity Sewer Main	600 LF	$ 100	$ 60,000
9	Side Sewer	15 EA	$ 3,000	$ 45,000
10	48" Manhole	5 EA	$ 6,000	$ 30,000
11	Crushed Surfacing Top Course	100 TN	$ 30.00	$ 3,000
12	Asphalt	200 TN	$ 120	$ 24,000
13	Gravel Backfill	520 TN	$ 30	$ 15,600
	Subtotal.....			$ 250,000
	Tax rate (10%)…...			25,000
	Subtotal:.....			$ 275,000
	Contingency (20%)…….			$ 55,000
	TOTAL ESTIMATED CONSTRUCTION COST:.....			$ 330,000
	Engineering and Administrative Costs (30%):.....			$ 99,000
	TOTAL ESTIMATED PROJECT COST:.....			$ 429,000

CITY OF BOTHELL
PRELIMINARY PROJECT COST ESTIMATE
PROPOSED SYSTEM IMPROVEMENT GV-10
NE 175th Street 21-inch Gravity Sewer Replacement

NO.	ITEM	QUANTITY	UNIT PRICE	AMOUNT
1	Mobilization, Cleanup, and Demobilization	LUMP SUM	$ 17,200	$ 17,200
2	Trench Safety Systems	LUMP SUM	$ 3,000	$ 3,000
3	Erosion Control	LUMP SUM	$ 1,500	$ 1,500
4	Locate Existing Utilities	LUMP SUM	$ 4,500	$ 4,000
5	Traffic Control	140 HR	$ 80	$ 11,200
6	Bypass Pumping	LUMP SUM	$ 3,000	$ 3,000
7	21" Gravity Sewer Main	400 LF	$ 180	$ 72,000
8	Side Sewer	7 EA	$ 3,000	$ 20,100
9	48" Manhole	2 EA	$ 6,000	$ 13,800
10	Crushed Surfacing Top Course	100 TN	$ 30.00	$ 3,000
11	Asphalt	90 TN	$ 120	$ 10,800
12	Gravel Backfill	980 TN	$ 30	$ 29,400
	Subtotal.....			$ 189,000
	Tax rate (10%)…..……..…..…..……..…….			19,000
	Subtotal:.....			$ 208,000
	Contingency (20%)……..…...…..……..…….			$ 42,000
	TOTAL ESTIMATED CONSTRUCTION COST:.....			$ 250,000
	Engineering and Administrative Costs (30%):.....….....…			$ 75,000
	TOTAL ESTIMATED PROJECT COST:.....			$ 325,000

CITY OF BOTHELL
PRELIMINARY PROJECT COST ESTIMATE
PROPOSED SYSTEM IMPROVEMENT GV-11
NE 101ST PL NE 8-INCH GRAVITY SEWER REPLACEMENT

NO.	ITEM	QUANTITY	UNIT PRICE	AMOUNT
1	Mobilization, Cleanup, and Demobilization	LUMP SUM	$ 16,600	$ 16,600
2	Trench Safety Systems	LUMP SUM	$ 2,900	$ 2,900
3	Erosion Control	LUMP SUM	$ 1,500	$ 1,500
4	Locate Existing Utilities	LUMP SUM	$ 4,400	$ 4,400
5	Traffic Control	110 HR	$ 80	$ 8,800
6	Bypass Pumping	LUMP SUM	$ 2,900	$ 2,900
7	8" Gravity Sewer Main	650 LF	$ 70	$ 45,500
8	Side Sewer	11 EA	$ 3,000	$ 32,400
9	48" Manhole	3 EA	$ 6,000	$ 19,200
10	Crushed Surfacing Top Course	30 TN	$ 30.00	$ 900
11	Asphalt	150 TN	$ 120	$ 18,000
12	Gravel Backfill	960 TN	$ 30	$ 28,800
	Subtotal.....			$ 182,000
	Tax rate (10%)…..……..…..…..……..…….			18,000
	Subtotal:.....			$ 200,000
	Contingency (20%)……..…...…..……..…….			$ 40,000
	TOTAL ESTIMATED CONSTRUCTION COST:.....			$ 240,000
	Engineering and Administrative Costs (30%):.....….....…			$ 72,000
	TOTAL ESTIMATED PROJECT COST:.....			$ 312,000

CITY OF BOTHELL
PRELIMINARY PROJECT COST ESTIMATE
PROPOSED SYSTEM IMPROVEMENT GV-12
96TH AVE NE 8-INCH GRAVITY SEWER MAIN REPLACEMENT

NO.	ITEM	QUANTITY	UNIT PRICE	AMOUNT
1	Mobilization, Cleanup, and Demobilization	LUMP SUM	$ 60,100	$ 60,100
2	Trench Safety Systems	LUMP SUM	$ 6,500	$ 6,500
3	Erosion Control	LUMP SUM	$ 3,300	$ 3,300
4	Locate Existing Utilities	LUMP SUM	$ 9,800	$ 9,800
5	Traffic Control	240 HR	$ 80	$ 19,200
6	Bypass Pumping	LUMP SUM	$ 6,500	$ 6,500
7	8" Gravity Sewer Main	1,500 LF	$ 70	$ 105,000
8	Side Sewer	25 EA	$ 3,000	$ 75,000
9	48" Manhole	6 EA	$ 6,000	$ 36,000
10	Crushed Surfacing Top Course	60 TN	$ 30.00	$ 1,800
11	Asphalt	330 TN	$ 120	$ 39,600
12	Gravel Backfill	2,200 TN	$ 30	$ 66,000
	Subtotal.....			$ 429,000
	Tax rate (10%)…..……..…..…..……..…….			43,000
	Subtotal:.....			$ 472,000
	Contingency (20%)……..…...…..……..…….			$ 94,000
	TOTAL ESTIMATED CONSTRUCTION COST:.....			$ 566,000
	Engineering and Administrative Costs (30%):.....….....…			$ 170,000
	TOTAL ESTIMATED PROJECT COST:.....			$ 736,000

CITY OF BOTHELL
PRELIMINARY PROJECT COST ESTIMATE
PROPOSED SYSTEM IMPROVEMENT GV-13
94TH AVE NE 8-INCH GRAVITY SEWER REPLACEMENT

NO.	ITEM	QUANTITY	UNIT PRICE	AMOUNT
1	Mobilization, Cleanup, and Demobilization	LUMP SUM	$ 15,300	$ 15,300
2	Trench Safety Systems	LUMP SUM	$ 2,700	$ 2,700
3	Erosion Control	LUMP SUM	$ 1,400	$ 1,400
4	Locate Existing Utilities	LUMP SUM	$ 4,100	$ 4,100
5	Traffic Control	100 HR	$ 80	$ 8,000
6	Bypass Pumping	LUMP SUM	$ 2,700	$ 2,700
7	8" Gravity Sewer Main	600 LF	$ 70	$ 42,000
8	Side Sewer	10 EA	$ 3,000	$ 30,000
9	48" Manhole	3 EA	$ 6,000	$ 18,000
10	Crushed Surfacing Top Course	30 TN	$ 30.00	$ 900
11	Asphalt	140 TN	$ 120	$ 16,800
12	Gravel Backfill	880 TN	$ 30	$ 26,400
	Subtotal.....			$ 169,000
	Tax rate (10%)…..……..…..…..……..…….			17,000
	Subtotal:.....			$ 186,000
	Contingency (20%)……..…...…..……..…….			$ 37,000
	TOTAL ESTIMATED CONSTRUCTION COST:.....			$ 223,000
	Engineering and Administrative Costs (30%):.....….....…			$ 67,000
	TOTAL ESTIMATED PROJECT COST:.....			$ 290,000

CITY OF BOTHELL
PRELIMINARY PROJECT COST ESTIMATE
PROPOSED SYSTEM IMPROVEMENT GV-14
EAST RIVERSIDE DRIVE TO LIFT STATION NO. 2 GRAVITY SEWER REPLACEMENT

NO.	ITEM	QUANTITY	UNIT PRICE	AMOUNT
1	Mobilization, Cleanup, and Demobilization	LUMP SUM	$ 36,900	$ 36,900
2	Trench Safety Systems	LUMP SUM	$ 6,500	$ 6,500
3	Erosion Control	LUMP SUM	$ 3,300	$ 3,300
4	Locate Existing Utilities	LUMP SUM	$ 9,800	$ 9,800
5	Traffic Control	240 HR	$ 80	$ 19,200
6	Bypass Pumping	LUMP SUM	$ 6,500	$ 6,500
7	8" Gravity Sewer Main	1,500 LF	$ 70	$ 105,000
8	Side Sewer	25 EA	$ 3,000	$ 75,000
9	48" Manhole	6 EA	$ 6,000	$ 36,000
10	Crushed Surfacing Top Course	60 TN	$ 30.00	$ 1,800
11	Asphalt	330 TN	$ 120	$ 39,600
12	Gravel Backfill	2,200 TN	$ 30	$ 66,000
	Subtotal.....			$ 406,000
	Tax rate (10%)…..……..…..…..……..…….			41,000
	Subtotal:.....			$ 447,000
	Contingency (20%)……..…...…..……..…….			$ 89,000
	TOTAL ESTIMATED CONSTRUCTION COST:.....			$ 536,000
	Engineering and Administrative Costs (30%):.....….....…			$ 161,000
	TOTAL ESTIMATED PROJECT COST:.....			$ 697,000

CITY OF BOTHELL
PRELIMINARY PROJECT COST ESTIMATE
PROPOSED SYSTEM IMPROVEMENT GV-15
Lift Station 4 Abandonment Gravity Sewer to North Creek Heights

NO.	ITEM	QUANTITY	UNIT PRICE	AMOUNT
1	Mobilization, Cleanup, and Demobilization	LUMP SUM	$ 48,100	$ 48,100
2	Trench Safety Systems	LUMP SUM	$ 9,600	$ 9,600
3	Erosion Control	LUMP SUM	$ 4,400	$ 4,400
4	Locate Existing Utilities	LUMP SUM	$ 13,000	$ 13,000
5	Traffic Control	310 HR	$ 80	$ 24,800
6	Bypass Pumping	LUMP SUM	$ 8,500	$ 8,500
7	8" Gravity Sewer Main	1,900 LF	$ 100	$ 190,000
8	Side Sewer	32 EA	$ 3,000	$ 95,100
9	48" Manhole	7 EA	$ 6,000	$ 43,800
10	Crushed Surfacing Top Course	50 TN	$ 30.00	$ 1,500
11	Asphalt	50 TN	$ 120	$ 6,000
12	Gravel Backfill	2,790 TN	$ 30	$ 83,700
13	Lift Station No. 4 Demolition	LUMP SUM	$ 10,000	$ 10,000
	Subtotal.....			$ 529,000
	Tax rate (10%)…..……..…..…..……..…….			53,000
	Subtotal:.....			$ 582,000
	Contingency (20%)……..…...…..……..…….			$ 116,000
	TOTAL ESTIMATED CONSTRUCTION COST:.....			$ 698,000
	Engineering and Administrative Costs (30%):.....….....…			$ 209,000
	TOTAL ESTIMATED PROJECT COST:.....			$ 907,000

CITY OF BOTHELL
PRELIMINARY PROJECT COST ESTIMATE
PROPOSED SYSTEM IMPROVEMENT LS-1
Lift Station 1 Improvements

NO.	ITEM	QUANTITY	UNIT PRICE	AMOUNT
1	Mobilization, Cleanup, and Demobilization	LUMP SUM	$ 32,800	$ 32,800
2	Trench Safety Systems	LUMP SUM	$ 7,500	$ 7,500
3	Erosion Control	LUMP SUM	$ 3,800	$ 3,800
4	Locate Existing Utilities	LUMP SUM	$ 11,200	$ 11,200
5	Traffic Control	310 HR	$ 80	$ 24,800
6	Bypass Pumping	LUMP SUM	$ 7,500	$ 7,500
7	8" HDPE Sewer Main	1,900 LF	$ 75	$ 142,500
8	Connection to Existing System	2 EA	$ 5,000	$ 10,000
9	Crushed Surfacing Top Course	210 TN	$ 30.00	$ 6,300
10	Asphalt	250 TN	$ 120	$ 30,000
11	Gravel Backfill	2,790 TN	$ 30	$ 83,700
12	Bridge Crossing	LUMP SUM	$ 100,000	$ 100,000
	Subtotal.....			$ 361,000
	Tax rate (10%)…..……..…..…..……..…….			36,000
	Subtotal:.....			$ 397,000
	Contingency (20%)……..…...…..……..…….			$ 79,000
	TOTAL ESTIMATED CONSTRUCTION COST:.....			$ 476,000
	Engineering and Administrative Costs (30%):.....….....…			$ 143,000
	TOTAL ESTIMATED PROJECT COST:.....			$ 619,000

APPENDIX G

RATE AND GFC ORDINANCES

ORDINANCE NO. 2235 (2017)

AN ORDINANCE OF THE CITY OF BOTHELL, WASHINGTON, ESTABLISHING NEW USER RATES FOR CLASS II, CLASS III, CLASS IV, AND CLASS V SANITARY SEWER SERVICES WITHIN AND WITHOUT THE CITY LIMITS OF THE CITY OF BOTHELL; AND AMENDING CHAPTER 18.03.210 OF THE BOTHELL MUNICIPAL CODE; AND PROVIDING FOR AN EFFECTIVE DATE; AND FOR SUMMARY PUBLICATION

WHEREAS; the City Council deems it necessary to increase the user rates within and without the City limits of the City of Bothell.

NOW, THEREFORE, THE CITY COUNCIL OF THE CITY OF BOTHELL, WASHINGTON, DOES ORDAIN AS FOLLOWS:

Section 1. Chapter 18.03.210 of the Bothell Municipal Code, is hereby amended to read as follows:

18.03.210 Rates - Users within city limits.
The following charges shall be made by the City for furnishing sewer service within the City limits:

A. Class I. Single-family residence: ~~$119.27~~ $120.10 every two months for each housekeeping unit, together with an additional charge measured by multiplying the annualized winter-average water usage from the prior year which exceeds 200 cubic feet per month by ~~$3.95~~ $3.98 per 100 cubic feet of excess. The winter period for this purpose is defined as November 1st through June 30th.

B. Class II. All commercial uses, which includes all uses not otherwise defined in Class I, Class III, Class IV and Class V: A minimum bi-monthly charge of ~~$152.28~~ $157.91, plus a customer equivalent charge measured by multiplying the water consumption and each occupancy which exceeds 750 cubic feet in any month by ~~$9.76~~ $10.12 per 100 cubic feet of excess.

C. Class III. Public and private schools: A minimum bi-monthly charge of ~~$152.28~~ $153.35 per school together with an additional charge each month at the rate of ~~$9.76~~ $10.12 per 100 cubic feet in excess of 750 cubic feet per month of water consumption per separate building; provided, however, during the months when school is not in session for the entire month, the bi-monthly charge shall be ~~$304.51~~ $315.78 per school.

D. Class V. Multiple unit residences, including duplexes, triplexes, fourplexes, hotels, motels, cabins, apartments, condominiums and all of their housekeeping units, except mobile home parks: A minimum bi-monthly charge of ~~$152.28~~ $157.91 plus a customer equivalent charge measured by multiplying the water consumption which exceeds 750 cubic feet in any month by ~~$9.76~~ $10.12 per 100 cubic feet of excess.

E. In special cases, single-family residents will be billed according to the following policies:

Special Case	Sewer Rate Policy
New homes	Billed at system average charge until use is established.
Changes in property ownership	Billed only system average charge until use is established.
Changes in tenancy	Billed only system average charge until use is established.
Non-water customers	Billed at system average charge.
Leak adjustments	Billed per adjusted winter volume. City will factor water leak adjustment into calculation for sewer rate.

E. Utility Tax. All charges set forth in this section shall be subject to the city's utility tax as set forth in BMC 5.08.020, which are not included in charges shown in BMC 18.03.210.

Section 2. Severability. If any section, sub-section, sentence, clause or phrase of this ordinance should be held to be invalid or unconstitutional by a court of competent jurisdiction, such invalidity or unconstitutionality shall not affect the validity of constitutionality of any other section, sub-section, sentence, clause or phrase of this ordinance.

Section 3. Savings. The enactments of this ordinance shall not affect any case, proceeding, appeal or other matter currently pending in any court or in any way modify any right or liability, civil or criminal, which may be in existence on the effective date of this ordinance.

Section 4. Referendum and Effective Date. This ordinance, being an exercise of a power specifically delegated to the City legislative body, is not subject to referendum, and shall take effect January 1, 2018, which is not less than five (5) days after passage and publication of the ordinance or a summary thereof consisting of the title.

Section 5. Corrections. The City Clerk and the codifiers of this ordinance are authorized to make necessary corrections to this ordinance including, but not limited to, the correction of scrivener's/clerical errors, references, ordinance numbering, section/subsection numbers and any references thereto.

APPROVED:

DAVINA DUERR
DEPUTY MAYOR

ATTEST/AUTHENTICATED:

LAURA HATHAWAY
CITY CLERK

APPROVED AS TO FORM:

PAUL BYRNE
CITY ATTORNEY

FILED WITH THE CITY CLERK: 10/09/2017
PASSED BY THE CITY COUNCIL: 10/17/2017
PUBLISHED: 10/20/2017
EFFECTIVE DATE: 01/01/2018
ORDINANCE NO.: 2235 (2017)

SUMMARY OF ORDINANCE NO. 2235 (2017)

City of Bothell, Washington

On the 17th day of October, 2017, the City Council of the City of Bothell passed Ordinance No. 2235 (2017). A summary of the content of said Ordinance, consisting of the title, is provided as follows:

> AN ORDINANCE OF THE CITY OF BOTHELL, WASHINGTON, ESTABLISHING NEW USER RATES FOR CLASS II, CLASS III, CLASS IV, AND CLASS V SANITARY SEWER SERVICES WITHIN AND WITHOUT THE CITY LIMITS OF THE CITY OF BOTHELL; AND AMENDING CHAPTER 18.03.210 OF THE BOTHELL MUNICIPAL CODE

The full text of this Ordinance will be mailed upon request.

LAURA HATHAWAY
CITY CLERK

FILED WITH THE CITY CLERK: 10/09/2017
PASSED BY THE CITY COUNCIL: 10/17/2017
PUBLISHED: 10/20/2017
EFFECTIVE DATE: 01/01/2018
ORDINANCE NO.: 2235 (2017)

ORDINANCE NO. 2248 (2018)

AN ORDINANCE OF THE CITY OF BOTHELL, WASHINGTON, AMENDING CHAPTER 18.03.210 OF THE BOTHELL MUNICIPAL CODE TO ESTABLISH NEW USER RATES FOR CLASS III SANITARY SEWER SERVICES WITHIN AND WITHOUT THE CITY LIMITS OF THE CITY OF BOTHELL.

WHEREAS; the City Council deems it necessary to correct an error in the recently-adopted sanitary sewer user rates for public and private schools within and without the City limits of the City of Bothell.

NOW, THEREFORE, THE CITY COUNCIL OF THE CITY OF BOTHELL, WASHINGTON, DOES ORDAIN AS FOLLOWS:

Section 1. Section 18.03.210 of the Bothell Municipal Code and the corresponding portions of Ordinance No. 2235 § 1 (2017) are hereby amended to read as follows, with new text shown by underline and deletions shown by ~~strikethrough~~; all other provisions of this section shall remain unchanged and in full force:

18.03.210 Rates - Users within city limits.

The director of public works is authorized to adopt administrative procedures for the purpose of administering the provisions of this chapter, including the procedure for annual calculation of average winter water consumption. The following charges shall be made by the City for furnishing sewer service within the City limits:

A. Class I. Single-family residence: $120.10 every two months for each housekeeping unit, together with an additional charge measured by multiplying the annualized winter-average water usage (AWWU) from the prior year which exceeds 200 cubic feet per month by $3.98 per 100 cubic feet of excess. The winter period for this purpose is defined as November 1st through June 30th. The resulting AWWU will be the basis for such customer's monthly sewer rate for the following calendar year.

B. Class II. All commercial uses, which includes all uses not otherwise defined in Class I, Class III, Class IV and Class V: A minimum bi-monthly charge of $157.91, plus a customer equivalent charge measured by multiplying the water consumption and each occupancy which exceeds 750 cubic feet in any month by $10.12 per 100 cubic feet of excess.

C. Class III. Public and private schools: A minimum bi-monthly charge of ~~$153.35~~ $157.91 per school together with an additional charge each month at the rate of $10.12 per 100 cubic feet in excess of 750 cubic feet per month of water consumption per separate building; provided, however, during the months when school is not in session for the entire month, the bi-monthly charge shall be $315.78 per school.

D. Class V. Multiple unit residences, including duplexes, triplexes, fourplexes, hotels, motels, cabins, apartments, condominiums and all of their housekeeping units, except mobile home parks: A minimum bi-monthly charge of $157.91 plus a customer equivalent charge measured by multiplying the water consumption which exceeds 750 cubic feet in any month by $10.12 per 100 cubic feet of excess.

E. In special cases, single-family residents will be billed according to the following policies:

Special Case:	Sewer Rate Policy:
New homes	Billed at system average charge until use is established.
Changes in property ownership	Billed only system average charge until use is established.
Changes in tenancy	Billed only system average charge until use is established.
Non-water customers	Billed at system average charge.
Leak adjustments	Billed per adjusted winter volume. City will factor water leak adjustment into calculation for sewer rate.

F. Utility Tax. All charges set forth in this section shall be subject to the city's utility tax as set forth in BMC 5.08.020, which are not included in charges shown in BMC 18.03.210.

Section 2. Severability. If any section, sub-section, sentence, clause or phrase of this ordinance should be held to be invalid or unconstitutional by a court of competent jurisdiction, such invalidity or unconstitutionality shall not affect the validity of constitutionality of any other section, sub-section, sentence, clause or phrase of this ordinance.

Section 3. Savings. The enactments of this ordinance shall not affect any case, proceeding, appeal or other matter currently pending in any court or in any way modify any right or liability, civil or criminal, which may be in existence on the effective date of this ordinance.

Section 4. This ordinance, being an exercise of a power specifically delegated to the City legislative body, is not subject to referendum, and shall take effect February 14, 2018, which is not less than five (5) days after passage and publication of the ordinance or a summary thereof consisting of the title.

Section 5. Corrections. The City Clerk and the codifiers of this ordinance are authorized to make necessary corrections to this ordinance including, but not limited to, the correction of scrivener's/clerical errors, references, ordinance numbering, section/subsection numbers and any references thereto.

APPROVED:

ANDREW J. RHEAUME
MAYOR

ATTEST/AUTHENTICATED:

LAURA HATHAWAY
CITY CLERK

APPROVED AS TO FORM:

PAUL BYRNE
CITY ATTORNEY

FILED WITH THE CITY CLERK: 01/28/2018
PASSED BY THE CITY COUNCIL: 02/06/2018
PUBLISHED: 02/09/2018
EFFECTIVE DATE: 02/14/2018
ORDINANCE NO.: 2248 (2018)

SUMMARY OF ORDINANCE NO. 2248 (2018)

City of Bothell, Washington

On the 6th day of February, 2018, the City Council of the City of Bothell passed Ordinance No.2248 (2018). A summary of the content of said Ordinance, consisting of the title, is provided as follows:

> AN ORDINANCE OF THE CITY OF BOTHELL, WASHINGTON, AMENDING CHAPTER 18.03.210 OF THE BOTHELL MUNICIPAL CODE TO ESTABLISH NEW USER RATES FOR CLASS III SANITARY SEWER SERVICES WITHIN AND WITHOUT THE CITY LIMITS OF THE CITY OF BOTHELL.

The full text of this Ordinance will be mailed upon request.

LAURA HATHAWAY
CITY CLERK

FILED WITH THE CITY CLERK: 01/28/2018
PASSED BY THE CITY COUNCIL: 02/06/2018
PUBLISHED: 02/09/2018
EFFECTIVE DATE: 02/14/2018
ORDINANCE NO.: 2248-(2018)

ORDINANCE NO. 2105 (2012)

AN ORDINANCE OF THE CITY OF BOTHELL, WASHINGTON, ESTABLISHING NEW USER RATES FOR CLASS II, CLASS III, CLASS IV, AND CLASS V SANITARY SEWER SERVICES WITHIN AND WITHOUT THE CITY LIMITS OF THE CITY OF BOTHELL; AND AMENDING SECTIONS 18.03.210, 18.03.220 and 18.03.280 OF THE BOTHELL MUNICIPAL CODE; AND PROVIDING FOR AN EFFECTIVE DATE; AND FOR SUMMARY PUBLICATION

WHEREAS; the City Council deems it necessary to increase the user rates within and without the City limits of the City of Bothell.

NOW, THEREFORE, THE CITY COUNCIL OF THE CITY OF BOTHELL, WASHINGTON, DOES ORDAIN AS FOLLOWS:

Section 1. Section 18.03.210 of the Bothell Municipal Code, is hereby amended to read as follows:

18.03.210 Rates - Users within city limits.
The following charges shall be made by the City for furnishing sewer service within the City limits:

A. Class I. Single-family residence: ~~$118.85~~ $129.67 every two months for each housekeeping unit; provided, however, low-income elderly customers shall be charged ~~$89.13~~ $97.24 every two months.

B. Class II. All commercial uses, which includes all uses not otherwise defined in Class I, Class III, Class IV and Class V: A minimum bi-monthly charge of ~~$118.85~~ $129.67 per unit of occupancy, plus a customer equivalent charge measured by multiplying the water consumption and each occupancy which exceeds 750 cubic feet in any month by ~~$7.62~~ $8.31 per 100 cubic feet of excess.

C. Class III. Public and private schools: A minimum bi-monthly charge of ~~$118.85~~ $129.67 per school together with an additional charge each month at the rate of ~~$7.62~~ $8.31 per 100 cubic feet in excess of 750 cubic feet per month per separate building; provided, however, during the months when school is not in session for the entire month, the bi-monthly charge shall be ~~$237.67~~ $259.30 per school.

D. Class V. Multiple unit residences, including duplexes, triplexes, fourplexes, hotels, motels, cabins, apartments, condominiums and all of their housekeeping units, except mobile home parks: A minimum bi-monthly charge of ~~$118.85~~ $129.67 plus a customer equivalent charge measured by multiplying the water consumption which exceeds 750 cubic feet in any month by ~~$7.62~~ $8.31 per 100 cubic feet of excess.

E. Utility Tax. All charges set forth in this section shall be subject to the City's utility tax as set forth in BMC 5.08.020, which are not included in charges shown in BMC 18.03.210.

Section 2. Section 18.03.220 of the Bothell Municipal Code is hereby amended to read as follows:

18.03.220 Rates - Users outside city limits.

The rates charged outside the city limits of the city of Bothell shall be the same for all user classifications as set forth in BMC 18.03.210 with the addition of a 25 percent surcharge added thereto.

~~The following charges shall be made by the City furnishing sewer service outside the City limits:~~

~~A. Class I. Single-family residences: $188.89 every two months for each housekeeping unit; provided, however, low-income elderly customers shall be charged $128.97 every two months.~~

~~B. Class II. All commercial uses, which includes all uses not otherwise defined in Class I, Class III, Class IV and Class V: A minimum bi-monthly charge of $188.89 per unit of occupancy, plus a customer equivalent charge measured by multiplying the water consumption and each occupancy which exceeds 750 cubic feet in any month by $12.71 per 100 cubic feet of excess.~~

~~C. Class III. Public and private schools: A minimum bi-monthly charge of $188.89 per school, together with an additional charge each month at the rate of $12.71 per 100 cubic feet in excess of 750 cubic feet per month per separate building; provided, however, during the months when school is not in session for the entire month, the bi-monthly charge shall be $381.49 per school.~~

~~D. Class V. Multiple unit residences, including duplexes, triplexes, fourplexes, hotels, motels, cabins, apartments, condominiums and all of their housekeeping units, except mobile home parks: A minimum bi-monthly charge of $188.89 plus a customer equivalent charge measured by~~

~~multiplying the water consumption which exceeds 750 cubic feet in any month by $12.71 per 100 cubic feet of excess.~~

Section 3. Section 18.03.280 of the Bothell Municipal Code is hereby amended to read as follows:

18.03.280 Billing - Payment.

A. Billing Period. Sewer service charges provided for in this chapter shall be billed by the finance department. Property owners shall be billed every other month on or about the fifth day of the month and charges shall be due 20 days after the date of invoice.

B. Delinquent Accounts- Penalty - ~~Interest Collections. Charges remaining unpaid more than 20 days after the date of invoice are delinquent. Delinquent accounts will be charged interest, in the maximum amount allowable by law, as prescribed in RCW 35.57.200, which is incorporated herein by this reference as now existing or hereafter amended. In the event the city refers the delinquent account for collection, a service charge in an amount fixed from time to time by resolution of the city council shall be charged to the property owner.~~ All charges for sewer service furnished by the city shall be due and payable to the city on the date shown on the face of the bill. Charges for services remaining unpaid at the close of business on the twentieth day following the billing date shall be considered delinquent and automatically subject to an additional late charge, as a penalty. Late charges shall be as established by resolution of the city.

C. Delinquent Accounts - Sewer Lien. In addition to all other remedies authorized by this chapter, the city shall have a lien for unpaid rates and charges for sewer service, penalties levied pursuant to RCW 35.67.190 and BMC 18.03.570 as now existing or hereafter amended, and connection charges, including interest thereon, against the premises to which the service has been furnished or is available. The city may foreclose the lien under procedures set forth in Chapter 35.67 RCW, as now existing or hereafter amended.

D. Sewer Lien - Effective Period. The city's sewer lien shall be effective for a total of six months' delinquent sewer service charges without the necessity of any writing or recording of the lien with the county auditor.

E. Alternative Enforcement of Lien - Water Cutoff. As an additional and concurrent method of enforcing the lien authorized by this chapter, the city shall have the right to cut off the water service to the premises to which such sewer service was furnished until all charges are paid, including interest, connection charges and penalties levied under RCW 35.67.190, together with a cutoff fee, as may be established from time to time by resolution of the city council; provided, however, where a sewer lien notice is required to be recorded, water service may only be cut off within two years from the date of recording of the lien notice.

F. Water Leaks - Adjustments to Bill. For property owners whose billing is based on water consumption, adjustments in billing charges may be made in the event of increased water

usage due to leaks in the property owner's system. If a property owner wishes an adjustment in a billing charge due to a water leak, a written request must be submitted to the finance director. The written request shall include the name, address, telephone number and service address, if different than above, of the property owner requesting the adjustment, the date and proof of adequate repair of the leak which may be established by receipt or billing for repair work and/or materials if the repair was accomplished by the property owner. Credit shall be posted to the account on the billing following submittal of proof of repair for a period extending up to 120 days prior to the date of repair. The charge for sewer shall be based on the water consumption history and other factors which, in the determination of the finance director, affect the property owner's water consumption.

G. Responsibility of Sewer Charges. Charges for sewer service shall be the responsibility of the property owner.

H. NSF Checks. Pursuant to Chapter 62A.3-515 RCW, if a check received in payment for sewer service charges is dishonored by nonacceptance or nonpayment, the city shall charge a reasonable handling fee fixed from time to time by resolution of the city council. If the check is not paid within 15 days after notice of dishonor, sent by certified mail to the last known address of the person responsible therefor, the drawer of said check shall be liable for interest, collection costs and attorneys' fees incurred in collecting the dishonored check. In addition, in the event of a court action on the dishonored check, after notice and the expiration of 15 days, the city shall be entitled to damages in the amount of three times the face value of the check or $300.00, whichever is less, pursuant to Chapter 62A.3-515 RCW.

Section 4. Severability. If any section, sub-section, sentence, clause or phrase of this ordinance should be held to be invalid or unconstitutional by a court of competent jurisdiction, such invalidity or unconstitutionality shall not affect the validity of constitutionality of any other section, sub-section, sentence, clause or phrase of this ordinance.

Section 5. Savings. The enactments of this ordinance shall not affect any case, proceeding, appeal or other matter currently pending in any court or in any way modify any right or liability, civil or criminal, which may be in existence on the effective date of this ordinance.

Section 6. This ordinance, being an exercise of a power specifically delegated to the City legislative body, is not subject to referendum, and shall take effect January 1, 2013, which is not less than five (5) days after passage and publication of the ordinance or a summary thereof consisting of the title.

Section 7. Corrections. The City Clerk and the codifiers of this ordinance are authorized to make necessary corrections to this ordinance including, but not limited to, the correction of scrivener's/clerical errors, references, ordinance numbering, section/subsection numbers and any references thereto.

APPROVED:

MARK LAMB
MAYOR

ATTEST/AUTHENTICATED:

JOANNE TRUDEL
CITY CLERK

APPROVED AS TO FORM:

JOSEPH N. BECK
CITY ATTORNEY

FILED WITH THE CITY CLERK: November 6, 2012
PASSED BY THE CITY COUNCIL: November 13, 2012
PUBLISHED: November 19, 2012
EFFECTIVE DATE: November 24, 2012
ORDINANCE NO.: 2105 (2012)

SUMMARY OF ORDINANCE NO. 2105 (2012)

City of Bothell, Washington

On the 13th day of November, 2012, the City Council of the City of Bothell passed Ordinance No. 2105 (2012). A summary of the content of said Ordinance, consisting of the title, is provided as follows:

> AN ORDINANCE OF THE CITY OF BOTHELL, WASHINGTON, ESTABLISHING NEW USER RATES FOR CLASS II, CLASS III, CLASS IV, AND CLASS V SANITARY SEWER SERVICES WITHIN AND WITHOUT THE CITY LIMITS OF THE CITY OF BOTHELL; AND AMENDING SECTIONS 18.03.210, 18.03.220 and 18.03.280 OF THE BOTHELL MUNICIPAL CODE

The full text of this Ordinance will be mailed upon request.

JOANNE TRUDEL
CITY CLERK

FILED WITH THE CITY CLERK: November 6, 2012
PASSED BY THE CITY COUNCIL: November 13, 2012
PUBLISHED: November 19, 2012
EFFECTIVE DATE: November 24, 2012
ORDINANCE NO.: 2105 (2012)

The Seattle Times

City Of Bothell City Clerk

18305 101st Ave NE

Bothell, WA 98011

Re: Advertiser Account # 109301

Ad #: 260923

Affidavit of Publication

STATE OF WASHINGTON
Counties of King and Snohomish

The undersigned, on oath states that he/she is an authorized representative of The Seattle Times Company, publisher of The Seattle Times of general circulation published daily in King and Snohomish Counties, State of Washington. The Seattle Times has been approved as a legal newspaper by others of the Superior Court of King and Snohomish Counties.

The notice, in the exact form annexed, was published in the regular and entire issue of said paper or papers and distributed to its subscribers during all of the said period.

Newspaper and Publication Date(s)	
Seattle Times	11/19/12

Agent MAUREEN E DUGGAN Signature Maureen E Duggan

Subscribed and sworn to before me on Nov 19 2012
DATE

Christina C. McKenna
(Notary Signature) Notary Public in and for the State of Washington, residing at Seattle

CHRISTINA C. MCKENNA
NOTARY PUBLIC
STATE OF WASHINGTON
COMMISSION EXPIRES 10-25-15

The Seattle Times

Re: Advertiser Account # 109301

Ad #: 260923

AD TEXT

SUMMARY OF ORDINANCE NO. 2105 (2012)
City of Bothell, Washington

On the 13th day of November, 2012, the City Council of the City of Bothell passed Ordinance No. 2105 (2012). A summary of the content of said Ordinance, consisting of the title, is provided as follows:

AN ORDINANCE OF THE CITY OF BOTHELL, WASHINGTON, ESTABLISHING NEW USER RATES FOR CLASS II, CLASS III, CLASS IV, AND CLASS V SANITARY SEWER SERVICES WITHIN AND WITHOUT THE CITY LIMITS OF THE CITY OF BOTHELL; AND AMENDING SECTIONS 18.03.210, 18.03.220 and 18.03.280 OF THE BOTHELL MUNICIPAL CODE

The full text of this Ordinance will be mailed upon request.

/s/ JoAnne Trudel
JOANNE TRUDEL
CITY CLERK

FILED WITH THE CITY CLERK: November 6, 2012

PASSED BY THE CITY COUNCIL: November 13, 2012

PUBLISHED: November 19, 2012

EFFECTIVE DATE: November 24, 2012

ORDINANCE NO.: 2105 (2012)

RESOLUTION NO. 1370 (2017)

A RESOLUTION OF THE CITY COUNCIL OF THE CITY OF BOTHELL, WASHINGTON, ESTABLISHING THE 2018 FEE SCHEDULE AND RESCINDING RESOLUTION NO. 1354 (2016).

WHEREAS, the City Council finds that the following fee schedule sets forth fees that are reasonable and necessary for the year 2018.

NOW, THEREFORE, THE CITY COUNCIL OF THE CITY OF BOTHELL, WASHINGTON, DOES RESOLVE AS FOLLOWS:

Section 1. Effective January 1, 2018, the schedule of fees set forth herein is hereby adopted, superceding the 2017 Fee Schedule as originally adopted:

	2017 Fee	**2018 Fee**
PUBLIC RECORDS		
1. Inspection of records	No Fee	**No Fee**
2. Records - printed	$0.15/page	**$0.15/page**
3. Records - scanned into electronic format	n/a	**$0.10/page**
4. Records provided by electronic delivery	n/a	**$0.05 for 4 files**
5. Electronic records transmission	n/a	**$0.10/gigabyte**
6. Storage media, postage/delivery charges, envelopes	n/a	**Actual Cost**
7. Scanning and placing documents onto CD/DVD	$8 CD $11 DVD	**$2.65**
8. Police audio/video on CD/DVD	$17.00	**$5.00**
CITY CLERK DIVISION		
~~1. Animal license fees~~		
~~a. Altered dog or cat annual license~~	30.00	**See Finance Department section**
~~b. Unaltered dog or cat annual license~~	60.00	
~~c. Senior (65 & over) life of altered pet~~	Initial fee $15.00 Renewal fee $0	
~~d. Service animal, altered pets only (with statement owner is disabled & animal is used as service animal)~~	0.00	
~~e. Replacement tag~~	5.00	
~~f. Transfer fee~~	3.00	
~~g. Late fee~~	15.00	
~~h. Juvenile animal license (8 wks - 6 mos)~~	15.00	
~~i. Dangerous dog registration fee~~	250.00	
~~j. Hobby kennel/cattery - application fee~~	100.00	

	2017 Fee	**2018 Fee**
1. Cemetery charges and fees		
Costs are estimates only. Deposit required prior to service. Exact costs will be calculated at conclusion and invoice (or refund) issued. 72 hours notice required.		
Interment/memorial fees		
Full-size burial	n/a	1,109.00
Casket liner/grave box/vault	n/a	53.00
(Required for full-size burial. Concrete vaults available upon request.)		
Urn burial - small	n/a	449.00
Urn burial - large	n/a	504.00
Urn liner	n/a	21.00
Memorial settings:		
Single flush marker	n/a	374.00
Double flush marker	n/a	396.00
Upright marker (2 or more pieces)	n/a	567.00
Optional/additional fees		
Canopy and chairs	n/a	104.00
Sump pump usage (if needed)	n/a	83.00
Burials on Sunday or City holiday (if required by King County Health Department)	n/a	$200 + applicable tax
~~a. Sale price of spaces~~		
~~Full size space~~	674.00	n/a
~~Quarter size space~~	230.00	n/a
~~b. Burial services~~		
~~Standard~~	Cost plus 100.00	n/a
~~Urn~~	Cost plus 100.00	n/a
~~Headstone installation~~	Cost plus 100.00	n/a
~~Vaults/liners (required for regular burials, optional for burial of cremated remains)~~	Cost plus 100.00	n/a
~~Rental of canopy (optional)~~	Cost plus 100.00	n/a
~~c. Miscellaneous cemetery services, (minor landscape changes, unique marker settings, etc.)~~		
~~3 hours or less~~	Cost plus 50.00	n/a
~~4 hours or more~~	Cost plus 100.00	n/a
~~2. DVD copies of meetings, per DVD~~	11.00	**See Public Records**
~~3. Publication request on CD~~	8.00	
2. Special events permits:		
a. 75 or more participants	167.00	**173.00**
b. Block party	20.00	**21.00**

	2017 Fee	**2018 Fee**
FINANCE DEPARTMENT		
1. Non-sufficient funds (NSF) check handling fee	38.00	**40.00**
2. Utility account fees and late charges		
a. Late fee penalty	11.00	**12.00**
b. Collection agency assignment fee	38.00	**40.00**
c. Customer request water shut-off or turn-on fee	30.00	**31.00**
d. Non-payment water shut-off fee	55.00	**57.00**
e. Non-payment water turn-on fee	55.00	**57.00**
f. Meter tampering administrative fee, in cases of meter tampering or water theft. Cumulative to any fines, penalties, water charges, or other fees and costs.	349.00	**360.00**
g. Meter re-reads (One re-read per year at no charge)	36.00	**38.00**
h. Final meter reads	36.00	**38.00**
i. Utility lien filing administrative fee, in addition to County recording costs	46.00	**48.00**
j. After hours water service reactivation charge for delinquent accounts	87.00	**90.00**
~~3. Credit card transaction fee~~	3%	**n/a**
3. Animal license fees		
a. Altered dog or cat annual license	See City Clerk section	**30.00**
b. Unaltered dog or cat annual license	See City Clerk section	**60.00**
c. Senior (65 & over) life of altered pet	See City Clerk section	**Initial fee $15** **Renewal fee $0**
d. Service animal, altered pets only (with statement owner is disabled & animal is used as service animal)	See City Clerk section	**0.00**
e. Replacement tag	See City Clerk section	**5.00**
f. Transfer fee	See City Clerk section	**3.00**
g. Late fee	See City Clerk section	**15.00**
h. Juvenile animal license (8 wks - 6 mos)	See City Clerk section	**15.00**
i. Dangerous dog registration fee	See City Clerk section	**250.00**
j. Hobby kennel/cattery - application fee	See City Clerk section	**100.00**
POLICE DEPARTMENT		
1. Fingerprinting		
a. First card - residents	15.00	**15.00**
b. Each additional card - residents	5.00	**5.00**
c. First card - nonresidents	20.00	**20.00**
d. Each additional card - nonresidents	10.00	**10.00**

	2017 Fee	**2018 Fee**
2. Case reports or miscellaneous reports		
a. 5 pages or less	4.00	**4.00**
b. 6 pages or more	4.00 Plus 0.15/page	**4.00 Plus 0.15/page**
~~c. Photos on CD~~	7.00	**See Public Records section**
3. Accident reports		
a. 5 pages or less	4.00	**4.00**
b. 6 pages or more	4.00 plus 0.15/page	**4.00 plus 0.15/page**
~~c. Photos on CD~~	7.00	**See Public Records section**
~~4. Audio and video recordings~~	17.00	**17.00**
4. False alarms		
a. First response	No Charge	**No Charge**
b. Second response within six months of first alarm	50.00	**50.00**
c. Third response within six months of first response	75.00	**75.00**
d. Fourth or higher response within six months of first response	100.00	**100.00**
5. Concealed pistol license		
a. Original	As set by WA State DOL	**As set by WA State DOL**
b. Renewal	As set by WA State DOL	**As set by WA State DOL**
c. Late renewal	As set by WA State DOL	**As set by WA State DOL**
d. Replacements	As set by WA State DOL	**As set by WA State DOL**
6. Clearance letter (notarized)	10.00	**10.00**
7. Animal control fees		
a. Shelter intake fee	185.00	**185.00**
b. Daily holding/kennel fee	25.00	**25.00**
c. Emergency veterinary care	Actual Cost	**Actual Cost**
d. Euthanasia and animal disposal	Actual Cost	**Actual Cost**
e. Hearing examiner costs associated with unsuccessful appeal of dangerous dog declaration	Actual Cost	**Actual Cost**

	2017 Fee	**2018 Fee**

FIRE DEPARTMENT

1. **Bothell Municipal Code Fire Fees**

False alarms		
a. First non-exempt preventable alarm	155.00	**160.00**
b. Subsequent non-exempt preventable alarm	195.00	**201.00**
Fireworks		
a. Retail seller permit	100.00	**100.00**
Plus cash bond	100.00	**100.00**
b. Public display permit	100.00	**100.00**
Plus cash bond	100.00	**100.00**

2. **Development Review Fees**

Building plan review fee, per square foot of gross building floor area	0.07	**0.08**
Land use reviews (Fire land-use review being added to Development Review fee structure, with associated billable hourly rates)		
5 acres or less	Hourly rate - See Dev Review Fee	Hourly rate - See Dev Review Fee
Over 5 acres		
Hazardous Materials Review	Peer review fee	**Peer review fee**

3. **IFC Operational Permits 105.6.1 - 46**

Aerosol products	218.00	**225.00**
Amusement buildings	177.00	**183.00**
Aviation facilities	212.00	**219.00**
Carnivals and fairs:		
Commercial	314.00	**324.00**
Non-profit	156.00	**161.00**
Cellulose nitrate film	122.00	**126.00**
Combustible fibers	122.00	**126.00**
Compressed gases	155.00	**160.00**
Covered mall buildings	212.00	**219.00**
Cryogenic fluids	155.00	**160.00**
Cutting and welding	177.00	**183.00**
Distributed antenna system	177.00	**183.00**
Dry cleaning plants	155.00	**160.00**
Dust producing operations	177.00	**183.00**
Exhibits and trade shows	177.00	**183.00**
Explosives	314.00	**324.00**
Fire hydrants and valves	177.00	**183.00**
Flammable and combustible liquids	308.00	**318.00**
Floor finishing	177.00	**183.00**
Fruit and crop ripening	212.00	**219.00**
Fumigation or thermal insecticidal fogging	212.00	**219.00**

	2017 Fee	**2018 Fee**
Hazardous materials	457.00	**471.00**
Hazardous production materials	177.00	**183.00**
High-piled storage	392.00	**404.00**
Hot work operations	177.00	**183.00**
Industrial ovens	155.00	**160.00**
Liquid/gas fueled vehicles/equipment in assembly building	122.00	**126.00**
Liquified petroleum gases	155.00	**160.00**
Lumber yards and woodworking plants	141.00	**146.00**
Magnesium	155.00	**160.00**
Miscellaneous combustible storage	122.00	**126.00**
Open flames and candles	95.00	**98.00**
Open flames and torches	177.00	**183.00**
Organic coatings	212.00	**219.00**
Places of assembly - Non-Profit	181.00	**187.00**
Places of assembly - Commercial	212.00	**219.00**
Positive alarm sequence fire alarm	177.00	**183.00**
Private fire hydrants	177.00	**183.00**
Pyrotechnical special effects material	281.00	**290.00**
Pyroxlin plastics	177.00	**183.00**
Refrigeration equipment	212.00	**219.00**
Repair garages and motor fuel-dispensing facilities	141.00	**146.00**
Rooftop heliports	177.00	**183.00**
Spraying or dipping	212.00	**219.00**
Temporary membrane structures and tents:		
a. Commercial	181.00	**187.00**
b. Non-profit	155.00	**160.00**
Tires: Rebuilding plants, storage of scrap and by-products	204.00	**211.00**
Waste handling	177.00	**183.00**
Wood products	177.00	**183.00**

4. **IFC Construction Permits 105.7.1 - 14***

*For all permits, plan reviews, revisions, reinspection fees and other inspections, a 5% Technology surcharge fee is applied to the total fee for services.

Automatic Fire Protection Systems

Automatic fire-extinguishing systems. Fire sprinkler NFPA 13, 13D, and 13R.

a. New commerical buildings NFPA 13, fee per riser (plus $1.00 per sprinkler head)	308.00	**613.00**
b. Commerical tenant improvements NFPA 13, fee per riser (plus $1.00 per sprinkler head)	177.00	**526.00**
c. Single and multi-family residential NDPA 13D and 13R	166.00	**397.00**
d. Underground fire sprinkler supply line	177.00	**80.00**
e. Commerical kitchen hood and duct systems	265.00	**80.00**
f. VESDA/FM-200 fire suppression systems	349.00	**742.00**
~~f. Additional fee per nozzle~~		
g. New mixed-use buildings NFPA 13, fee per riser (plus $1.00 per sprinkler head)	n/a	**613.00**

	2017 Fee	**2018 Fee**
Battery systems	233.00	**224.00**
Compressed gases	155.00	**353.00**
Cryogenic fluids	155.00	**353.00**
Automatic Fire Detection Systems		
Fire alarm/detection systems and related equipment.		
NFPA 10 fire alarm and signaling systems.		
a. Fire alarm panels, 1-4 zones, plus $1.50/device	181.00	**742.00**
b. Fire alarm panels, 5 or more zones, plus $1.50/device	233.00	**1,001.00**
c. Addressable control panels, plus $1.00/device	308.00	**742.00**
d. Fire alarm transmission devices	181.00	**224.00**
Other Systems		
Industrial ovens	155.00	**310.00**
Liquified petroleum gas	155.00	**310.00**
Private fire hydrants	295.00	**224.00**
Spraying and dipping	212.00	**483.00**
Standpipe systems	181.00	**397.00**
Distributed antenna system	177.00	**397.00**
Fire pumps and related equipment	181.00	**224.00**
Flammable and combustible liquids storage and transport		
Level 1: Less than 1000 gallon capacity	189.00	**224.00**
Level 2: 1000+ gallon capacity	335.00	**483.00**
Hazardous Materials Processing Systems	Peer review fee	**Peer review fee**
Temporary membrane structures and tents:		
a. Commercial	181.00	**267.00**
b. Non-profit	155.00	**267.00**

5. **Inspection Fees**

After-hours inspections (billed half-hourly)	Hourly rate - See Dev Review Fee	Hourly rate - See Dev Review Fee
Stop Work Order Fee	87.00	**90.00**
Inspections fees - phase project inspection fee	n/a	**137.00**
Fire Code construction permit re-inspection fee. (Billed for each inspection occurrence after primary inspection and first re-inspection.)	68.00	**137.00**

	2017 Fee	**2018 Fee**
6. **Response Operations Section Fees**		
Fees for Non-Public Records Act Requests		
Fire incident/investigation reports	15.00	**15.00**
Medical incident reports	15.00	**15.00**
EMS transport fee	550.00 or Medicare Allowable Rate	**550.00 or Medicare Allowable Rate**
Transport mileage fee	14.00 per mile	**14.00 per mile**
Motor Vehicle Collision (MVC) and Vehicle Fire recovery fees		
Level One Response	466.00	**480.00**
Level Two Response	589.00	**607.00**
Level Three Response	748.00	**771.00**
Level Four Response	1,403.00	**1,446.00**
7. **CRR - Public Education Fees**		
CPR class fees - Organizations requesting required CPR training. Class size limited to 8.		
a. Adult and child CPR w/AED	331.00	**341.00**
b. Healthcare provider CPR	331.00	**341.00**
c. First aid	335.00	**346.00**
CPR class fees - Scheduled classes open to all individuals for enrollment. (Resident charge applies to all Snohomish County District 10 residents)		
a. Adult, child, & infant CPR/AED - Resident	46.00	**48.00**
b. Adult, child, & infant CPR/AED - Nonresident	56.00	**58.00**
c. First aid - Resident	46.00	**48.00**
d. First aid - Nonresident	56.00	**58.00**
Public Education safety classes		
a. Mock impaired driving demonstration	800.00	**800.00**
b. CERT (Community Emergency Response Team) - -Scheduled classes open to individuals for enrollment.	50.00	**50.00**
c. Safe Sitter class	25.00	**25.00**
d. Search & Rescue	Instructor Hourly Rate	**Instructor Hourly Rate**
e. Triage	Instructor Hourly Rate	**Instructor Hourly Rate**
f. ICS/NIMS	Instructor Hourly Rate	**Instructor Hourly Rate**
g. Other safety classes	Instructor Hourly Rate	**Instructor Hourly Rate**
Bicycle Helmets (per helmet fee)	10.00	**10.00**

		2017 Fee	**2018 Fee**
	COMMUNITY DEVELOPMENT		
	PLANNING		
1.	Administrative final plat	n/a	**4,717.00**
2.	ADU	n/a	**715.00**
3.	Annexation - Type V	n/a	**Hourly**
4.	Appeals	1,530.00	**1,576.00**
5.	Bothell Municipal Code amendments	4,523.00	**Hourly**
6.	Boundary line adjustment - Type I	n/a	**904.00**
7.	Comprehensive plan amendments (property specific)	4,523.00	**Hourly**
	~~Fee applies during annual updates. 50% discount during major plan update years.~~		
8.	Conditional use - Type III	n/a	**6,232.00**
9.	Critical areas alteration - Type II	n/a	**3,372.00**
10.	Demolition fee - accessory structure	n/a	**131.00**
11.	Demolition fee - historic structure	n/a	**Hourly**
12.	Demolition fee - main structure	n/a	**321.00**
13.	Demolition - historic inventory	n/a	**Hourly**
14.	Director's interpretation	n/a	**2,657.00**
15.	Final plat	n/a	**5,608.00**
16.	Final plat - additional per lot (after 5)	n/a	**342.00**
17.	Final short plat	n/a	**3,626.00**
18.	First pre-application meeting (for actions initiated by single-family homeowners)	693.00	**700.00**
19.	First pre-application meeting	1,380.00	**1,545.00**
	All subsequent pre-application meetings, project review, and any additional staff time spent on processing a development applicant's proposal prior to and following submittal of a formal land use or building permit application shall be billed monthly at the applicable staff hourly rate, including benefits and overhead.		
20.	First-time tenant improvements	n/a	**218.00**
21.	Personal wireless - Type I	n/a	**1,067.00**
22.	Personal wireless - Type II	n/a	**1,731.00**
23.	Planned unit development - final without plat	n/a	**2,153.00**
24.	Planned unit development - preliminary without plat	n/a	**6,869.00**
25.	Preliminary plat	n/a	**12,747.00**
26.	Preliminary plat - additional per lot (after 5)	n/a	**519.00**
27.	Preliminary short plat	n/a	**6,849.00**
28.	PUD - major mod	n/a	**4,368.00**
29.	PUD - minor mod	n/a	**715.00**
30.	Request for extension of construction noise hours	158.00	**163.00**
31.	SEPA	n/a	**957.00**
32.	Shoreline conditional use	n/a	**7,024.00**
33.	Shoreline substantial development	n/a	**6,868.00**
34.	Shoreline exemption	n/a	**1,711.00**
35.	Shoreline variance	n/a	**7,024.00**
36.	Sign permits - first sign	149.00	**622.00**
37.	Sign permits - additional	26.00	**181.00**

	2017 Fee	**2018 Fee**
38. Site rezone application fee	Hourly	**Hourly**

An applicant shall pay for all work done by, or on behalf of, the City in connection with the processing and review of the application, including public hearing presentations and hearing body findings, conclusions and decisions. ~~(as specified in Development Review Fee section)~~

The Applicant shall be invoiced for actual costs by the Community Development and Public Works staff to provide for reimbursement of municipal employee time. The charges will be based on the applicable staff hourly rate of the employee performing the review, including benefits and overhead. At the request of the applicant, overtime may be authorized for plan review and/or inspections performed outside of normal working hour and will be charged at the applicable staff overtime hourly rate, including benefits and overhead. Payments shall be paid to the City upon demand. Maintenance bonds will not be released until all fees are paid in full.

The applicant shall be responsible for the cost of legal counsel review, hearing examiner review, all recording fees associated with final plats, binding site plans and all other development documents requiring recording, consultants, and any additional required studies, and for reimbursement of municipal employee time.

39. Sub - major mod	n/a	**4,368.00**
40. Sub - minor mod	n/a	**715.00**
41. Sub - vacate	n/a	**4,368.00**
42. Transitory accomodation review	n/a	**2,707.00**
43. Variance - Type III	n/a	**3,703.00**
44. Zoning confirmation ~~request~~ letter	158.00	**218.00**

~~5. Custom map requests. For custom requests requiring plotting, a fee of $60.00 per hour with a 15 minute minimum ($15.00); plus reimbursement for supplies as follows:~~		
~~CD-ROM - recordable~~	n/a	**n/a**
~~11" x 17" paper~~	4.00	**See**
~~36" minimum wide plot, per lineal foot~~	5.00	**Miscellaneous**
~~DVD-recordable~~	1.00	**fees section**

BUSINESS LICENSES

1. Business license fee (total of a, b, and c)		
a. Number of employees:		
0-2	28.00	**29.00**
3-10	74.00	**77.00**
11-25	156.00	**161.00**
26-50	335.00	**346.00**
51-75	505.00	**521.00**
76-100	674.00	**695.00**
100+	674.00	**695.00**
Additional fee for each employee over 100	11.00	**12.00**
Transfer to new location	28.00	**29.00**
Transfer to new owner	28.00	**29.00**
Duplicate License	8.00	**9.00**

	2017 Fee	**2018 Fee**
b. Type of business:		
Contractors	37.00	**39.00**
Public assembly	72.00	**75.00**
Educational	72.00	**75.00**
Institutional	72.00	**75.00**
Residential	54.00	**56.00**
Store, office	37.00	**39.00**
Basic industry/utility	89.00	**92.00**
Manufacturing	89.00	**92.00**
Storage	72.00	**75.00**
Special properties	72.00	**75.00**
Apartments	280.00	**289.00**
c. Occupancy size for businesses (square feet)		
Less than 3,000	0.00	**0.00**
3,001-5,000	56.00	**58.00**
5,001-10,000	87.00	**90.00**
10,001-15,000	1,371.00	**1,413.00**
15,001-17,000	1,887.00	**1,944.00**
17,001-20,000	2,117.00	**2,181.00**
20,001-50,000	2,555.00	**2,632.00**
Greater than 50,000	4,439.00	**4,573.00**
d. Occupancy size for apartment buildings (square feet)		
Less than 3,000	0.00	**0.00**
3,001-5,000	56.00	**58.00**
5,001-10,000	87.00	**90.00**
10,001-15,000	1,371.00	**1,413.00**
15,001-17,000	1,887.00	**1,944.00**
17,001-20,000	2,117.00	**2,181.00**
20,001-50,000	2,555.00	**2,632.00**
Greater than 50,000	2,960.00	**3,049.00**
2. Adult entertainment facilities		
a. Adult entertainment facility license, per year, plus business license fee	3,094.00	**3,187.00**
b. Manager license, per year	775.00	**799.00**
c. Entertainer license, per year	775.00	**799.00**
3. Public/teen dance, per year	513.00	**529.00**
4. Amusement game device, per game, per year	47.00	**49.00**
5. Pawnbrokers, per year	173.00	**179.00**
6. Secondhand dealers, per year	47.00	**49.00**
7. Family day care homes, per year	19.00	**20.00**

	2017 Fee	**2018 Fee**

BUILDING/CODE ENFORCEMENT

Table 20.02.155 B - OTHER FEES (Building, Plumbing, and Mechanical Permits)[3]

1.	Inspections outside of normal business hours (per hour)[3]	n/a	**156.51**
2.	Reinspection fee[3,4]	n/a	**156.51**
3.	Inspection for which no fee is specifically indicated (per hour)[3]	n/a	**156.51**
4.	Additional plan review required by changes, additions, and/or revisions (per hour)[3]	n/a	**156.51**
5.	Re-roof (single family residence)[3]	n/a	**120.00**
6.	Use of outside consultants for plan checking or inspections: Actual costs[1,3]	n/a	**Hourly**
7.	Mobile home replacement/installation[3]	n/a	**280.00**
8.	Moved building (pre-move inspection)[3]	n/a	**250.00**

[1]Actual costs include fees for consultant services, plus administrative and overhead costs.

[2]Plan review fee includes the initital plan review and two re-reviews. Any subsequent reviews after the third review will result in a $156.51/hour charge for additional review services.

[3]For all permits, plan reviews, revisions, reinspection fees, and other inspections, a 5% Technology surcharge is applied to the total fee for services.

[4]Inspection services include one initial inspection for each type of inspection and/or area to be inspected (if inspected in phases/sections), and one reinspection to address items requiring correction during the initial inspection. If items are not completed at the reinspection, the inspector may issue a reinspection fee for any subsquent inspections necessary to address the remaining items. The inspector may also issue a reinspection fee if a project has requested an inspection and is not ready at the time of inspection. In instances where reinspection fees have been assessed, no additonal inspection of the work shall be provided by the City until the required fees are paid.

Plumbing and Mechanical Permit Fees (Multi-Family, Mixed-Use, and Non-Residential)

1. Permit fee - see valuation table below to determine plumbing and/or mechanical permit fee due at issuance.

2. Plan review fee - when plans are required to be submitted for review, a plan review fee equal to 40% of the mechanical permit fee shall be paid at the time of submittal.
3. Technology fee - a 5% fee will be added for all permit and plan review related services.
4. Miscellaneous inspection and other fees - see table under Building Permit Fees.

The valuation table below applies to all multi-family, mixed-use, and non-residential plumbing and mechanical permits, unless otherwise noted. Fees listed are in addition to plan review, Washington state surcharges, 5% technology fee, and any other applicable stop work order/special investigation fees.

Total Valuation		
$0 - $1,000*		
Up to $1,000	n/a	**65.00**
$1,001 - $2,000*		
For the first $1,000	n/a	**68.00**
Per additional $100 or portion, up to $2,000	n/a	**5.00**
$2,001 - $25,000*		
For the first $2,000	n/a	**125.00**

	2017 Fee	2018 Fee
Per additional $1,000 or portion, up to $25,000	n/a	**19.00**
$25,001 - $50,000*		
For the first $25,000	n/a	**515.00**
Per additional $1,000 or portion, up to $50,000	n/a	**14.00**
$50,001 - $100,000*		
For the first $50,000	n/a	**815.00**
Per additional $1,000 or portion, up to $100,000	n/a	**13.00**
$100,001 - $500,000*		
For the first $100,000	n/a	**1,275.00**
Per additional $1,000 or portion, up to $500,000	n/a	**11.00**
$500,001 - $1,000,000*		
For the first $500,000	n/a	**4,175.00**
Per additional $1,000 or portion, up to $1,000,000	n/a	**7.00**
$1,000,001 - $5,000,000*		
For the first $1,000,000	n/a	**7,300.00**
Per additional $1,000 or portion, up to $5,000,000	n/a	**5.00**
$5,000,001 and up*		
For the first $5,000,000	n/a	**23,125.00**
Per additional $1,000	n/a	**4.00**

*For multi-level buildings over 2 stories, add $30/unit for each dwelling unit above the 2nd story (does not include townhouses and detached single family units on one lot, which are charged using the percentage of building permit fee for new single family construction.

Residential Plumbing and Mechanical (New Construction): 8% of Building Permit Fee

Residential Mechanical Fees - Alterations/Additions/Replacements

Base permit fee	n/a	**55.00**
Gas piping (per outlet)	n/a	**10.00**
Hydronic piping (per outlet)	n/a	**10.00**
Gas water heaters (per fixture)	n/a	**20.00**
Solid fuel burning appliances - wood/pellet stoves/inserts (per fixture)	n/a	**30.00**
Gas log inserts (per fixture)	n/a	**20.00**
Heating equipment - including ductwork (per fixture)	n/a	**30.00**
Vent/exhaust fans (per fixture)	n/a	**20.00**
Ventilation systems - not part of heating or A/C systems (per fixture)	n/a	**20.00**
Ductwork system remodels (per zone)	n/a	**20.00**
Compressors, air conditioners, & heat pumps (per fixture)	n/a	**30.00**
Other (per item)	n/a	**20.00**

Residential Plumbing Fees - Alterations/Additions/Replacements

Base permit fee	n/a	**55.00**
Backflow preventers & vacuum breakers (per fixture)	n/a	**15.00**
Kitchen sinks (per fixture)	n/a	**15.00**
Dishwashers (per fixture)	n/a	**15.00**
Electric water heaters (per fixture)	n/a	**15.00**
Clothes washers (per fixture)	n/a	**15.00**

	2017 Fee	**2018 Fee**
Lavatories/bathroom sinks (per fixture)	n/a	**15.00**
Water closets/toilets (per fixture)	n/a	**15.00**
Bathtubs (per fixture)	n/a	**15.00**
Showers/valve replacements (per fixture)	n/a	**15.00**
Floor drains (per fixture)	n/a	**15.00**
Water softeners (per fixture)	n/a	**15.00**
Sewage ejectors (per fixture)	n/a	**15.00**
Laundry trays & utility sinks (per fixture)	n/a	**15.00**
Bar sinks (per fixture)	n/a	**15.00**
Drinking fountains (per fixture)	n/a	**15.00**
Urinals (per fixture)	n/a	**15.00**
Backwater valves (per fixture)	n/a	**15.00**
Miscellaneous plumbing (per fixture)	n/a	**15.00**
Repair/replacement of water piping (per fixture)	n/a	**25.00**
Water line (meter to house)	n/a	**50.00**

Other Fees

1. Building moving - through City
   $223.00 minimum charge or actual cost, whichever is greater

2. Building moving - into or within City

Permit fee	38.00	**40.00**

   Pre-move inspection fee of $112 or actual cost, whichever is greater

3. Plan reviews and inspections to ensure compliance with the Washington State Energy Code:

Per single family dwelling	152.00	**157.00**
Per residential remodel/addition	152.00	**157.00**
Per multi-family structure	302.00	**312.00**
Additional per unit fee	79.00	**82.00**
Per commercial building	302.00	**312.00**
Per tenant improvement	152.00	**157.00**

4. Code enforcement violations
   a. Hearing Examiner - Actual charge to City for services
   b. City staff time at hearing - Actual cost based on applicable staff hourly rate, including benefits and overhead.
   c. City Attorney - Actual charge based on hourly rate of pay for City Attorney, including benefits and overhead.

d. Administrative Fee	155.00	**160.00**

5. Demolition Fee

a. Main Structure	318.00	**328.00**
b. Accessory Structure	55.00	**57.00**
c. Historic Structure	317.00 + Dev Review Fee	**327.00 + Dev Review Fee**

	2017 Fee	**2018 Fee**

PUBLIC WORKS, COMMUNITY DEVELOPMENT, & FIRE DEVELOPMENT REVIEW, PERMIT FEES AND CHARGES

Development Review Fee

Following a third review or for permits subject to hourly review fees, an applicant shall pay for all work done by, or on behalf of, the City in connection with the processing, reviewing, checking, computing, and inspecting and correcting for compliance with City codes of the plans or other documents provided by the applicant and for plan checking, land use evaluations, inspection and testing for all public and private infrastructure improvement including water lines, sanitary sewer lines, storm water retention/detention and drainage systems, streets, curbs, gutters and sidewalks, parking, landscaping, building heights & setbacks, signage, verification of conditions of approval and performing concurrency evaluations, impact fee assessments, and all non-SEPA traffic evaluations in conjunction with a land use, building, or construction application. Individual single family residences exempt from SEPA review are not required to pay a Development Review fee. The applicant shall be invoiced for actual costs on a monthly basis. Payment is due to the City upon demand.

The Development Review fees provide for reimbursement of municipal employee time. The charges will be based on the applicable staff billing rate of the employee performing the review, including benefits and overhead and out of pocket expenses such as outside consultant peer review, specialized subconsultants, printing expenses, and other related costs. Billing will occur on a monthly basis. At the request of the applicant overtime may be authorized for plan review and or inspections performed outside of normal working hours and will be charged at the applicable staff overtime hourly rate (time and a half), including benefits and overhead. Maintenance bonds will not be released until all fees are paid in full.

The applicant shall be responsible for the cost of legal counsel review, hearing examiner review, all recording fees associated with final plats, binding site plans and all other development documents requiring recording, consultants, and any additional required studies, and for reimbursement of municipal employee time at their current billable hourly rate.

Development Review Technology Surcharge

In order to reimburse the City for costs specifically related to the maintenance and regular upgrading of local and regional electronic development review and tracking systems, which benefit the City's development customers via an increasingly efficient and effective review process, a five percent technology surcharge will be added to pre-application conference fees; plan review fees; permit fees; and development review fees. The technology surcharge will not be placed on facilities charges or impact fees.

PUBLIC WORKS

WATER FEES & CHARGES

1. Water main facility charges

3/4" (5/8") meter	4,524.00	**4,660.00**
1" meter	9,835.00	**10,131.00**
1.5" meter	22,901.00	**23,589.00**
2" meter	35,344.00	**36,405.00**
3" meter	75,951.00	**78,230.00**
4" meter	115,711.00	**119,183.00**
6" meter	234,931.00	**241,979.00**

	2017 Fee	**2018 Fee**
8" meter	381,505.00	**392,951.00**
2. Fire hydrant use		
Permit (per calendar year)	117.00	**121.00**
Hydrant use deposit	1,020.00	**1,000.00**
City hydrant meter (make-up) damage deposit	1,530.00	**1,500.00**
Hydrant meter (make-up) rental/per month	110.00	**114.00**
Water/per 100 cubic feet	12.00	**13.00**
3. Water meters		
a. Water meter processing fee, per meter	36.00	**38.00**
b. Existing service line to property and meter box		
3/4"	438.00	**452.00**
1"	498.00	**513.00**
1 1/2"	745.00	**768.00**
2"	914.00	**942.00**
c. Complete water service (no existing service to property). At the discretion of the Public Works Director, City crew provides main water tap, brings service to property, and provides and installs meter box and meter.		
3/4" short side	5,197.00	**5,353.00**
3/4" long side	6,433.00	**6,626.00**
1" short side	5,321.00	**5,481.00**
1" long side	5,321.00	**5,481.00**
4. Water main tap: Not associated with a development project	226.00	**233.00**
5. Water main tap: Associated with a development project. Water main tap fee plus development review fee.	$119 + Dev Review Fee	**610.00**
6. Fire flow/hydraulic analysis (plus passthrough consultant fees)	268.00	**177.00**
7. Flushing/dechlorination/disinfection service (Depending on availability)	$156 + Dev Review Fee	**1,009.00**
8. Backflow assembly inspection	173.00	**n/a**
2 inch or smaller	n/a	**211.00**
3 inch or larger	n/a	**690.00**
~~9. Fire service line base charge~~		
~~Residential~~	9.00	**n/a**
~~4" Commercial~~	16.00	**n/a**
~~6" Commercial~~	21.00	**n/a**
~~8" Commercial~~	26.00	**n/a**
9. Water utility infrastructure improvements		
Water utility base charge	n/a	**488.00**
Water utility fee per 100 lineal feet of improvements	n/a	**1,805.00**

	2017 Fee	**2018 Fee**
SEWER FEES & CHARGES		
1. Sewer main facility charges		
a. Single family	2,855.00	**2,941.00**
b. Commercial/multi-family (RCE*)	2,855.00	**2,941.00**
*(Resident customer equivalent, as determined by METRO capacity form)		
2. Side sewer connections		
Side sewer processing fee	35.00	**51.00**
Single family side sewer	336.00	**240.00**
Detached multi-family side sewer connection	n/a	**240.00**
Commercial/multi-family side sewer connection (1st unit/bldg) associated w/development project. Side connection fee + development review fee	$119 + Dev Review Fee	**610.00**
Additional per unit charge per building	28.00	**451.00**
Repair/modify side sewer existing line(s)	336.00	**240.00**
Repair/modify commercial/multi-family side sewer connection	n/a	**Hourly**
3. Sewer main tap: not associated with a development project	226.00	**690.00**
4. Sewer main tap: associated with a development project. Sewer main tap fee + development review fee	$119 + Dev Review Fee	**1,009.00**
5. Television pipeline inspection service (Depending on availability)	$166 per hour (3 hr minimum)	**$171 per hour (3 hr minimum)**
6. Re-inspection fee ~~- to include supervision, overhead, equipment, hourly wages/benefits of employees involved~~	$75.00 or total staff cost	**160.00**
7. Sewer utility infrastructure improvements		
Sewer utility base charge	n/a	**488.00**
Sewer utility fee per 100 lineal feet of improvements	n/a	**1,502.00**
STORM DRAIN AND SURFACE WATER		
1. Single family storm drain inspection fee	226.00	**233.00**
2. Television pipeline inspection service (Depending on availability)	$166 per hour (3 hr minimum)	**$171 per hour (3 hr minimum)**
3. Citywide stormwater facility charge	$1,248 per impervious Surface unit	**$1,286 per Impervious Surface Unit**
4. Stormwater facility charge - downtown sub-basin area	$13,170 per Impervious Surface Unit	**$13,566 per Impervious Surface Unit**

	2017 Fee	**2018 Fee**
5. Stormwater detention facility (plus pass-through consultant charges)	n/a	**851.00**
6. Stormwater utility infrastructure improvements		
Stormwater utility base charge	n/a	**488.00**
Stormwater utility fee per 100 lineal feet of improvements	n/a	**555.00**
ROADS & STREETS		
1. Driveway approach - right of way invasion permit	459.00	**546.00**
2. Street excavation, minor - right of way invasion permit	251.00	**799.00**
3. ~~Street excavation, major: right of way invasion permit 0-300 lineal feet~~	448.00	**n/a**
Major franchise base fee	n/a	**578.00**
Right of way franchise - hourly	n/a	**Hourly**
~~Additional per foot charge for over 300 feet~~	9.00	**n/a**
~~Street excavation, major: right of way invasion permit 0-300 lineal feet~~ ~~4. associated with a development project.~~ ~~Street excavation fee + development review fee.~~	$248 + Dev Review Fee	**n/a**
~~Additional per foot charge for over 300 feet~~	9.00	**n/a**
4. Public utilities blanket permit (per calendar year)	696.00	**717.00**
5. ~~Public utilities~~ Right of way ~~invasion~~ permit~~, per site~~	223.00	**n/a**
Base charge	n/a	**1,074.00**
Right of way per 100 lineal feet	n/a	**496.00**
6. Street vacation application Applicant responsible for cost of appraisal & recording fees	1,388.00	**Hourly**
7. Purchase and installation of up to two DUI memorial sign(s)	599.00	**667.00**
8. Accident clean-up / emergency response	209.00	**216.00**
9. Traffic concurrency base charge	n/a	**2,161.00**
10. Concurrency capacity reporting & monitoring surcharge		
a. Major development A "Major development" means any development that generates more than fifty (50) peak hour trips.	3,094.00	**3,187.00**
b. Medium development A "Medium development" means any development that generates twenty to fifty (20-50) peak hour trips.	1,857.00	**1,913.00**
c. Minor development A "Minor development" means any development that generates at least three (3) peak hour trips, but less than twenty (20) peak hour trips.	931.00	**959.00**

	2017 Fee	**2018 Fee**
11. Street cut mitigation fee		
Street cut mitigation base fee	n/a	**51.00**
"Mitigation fee" (17.08.050). The fee is based upon the cost of overlay for permanent repair of damage/deterioration of streets and shoulders caused by trenching/utility operations. Fee per lineal feet of opening ~~x **$21.00** = overlay cost.~~	21.00	**22.00**
12. Public area use permit application fees		
~~Uses with access restricted to patrons~~	330.00	**n/a**
~~Other uses, without restricted access~~	51.00	**n/a**
Outdoor dining permit fee - sidewalk only	n/a	**No Charge**
Annual renewal (no substantial changes)	n/a	**100.00**
Railing permit (if applicable)	n/a	**150.00**
Outdoor dining permit fee - flexible zone		
Applications received on or before March 15	n/a	**No Charge**
Applications received after March 15	n/a	**750.00**
City to move bollards on first Friday of May and last Friday of September each year to minimize cost and disruptions.		
Annual use charge per square foot (applies to all outdoor dining in the public right of way.) Based on gross square footage - square footage of clear path.	n/a	**No Charge**
13. Traffic control devices for public area use permits	162.00	**167.00**
REVIEW AND INSPECTION FEES		
1. Single family site review and inspection	559.00	**578.00**
Construction and additions. Prior to issuance of building permits, site plans for single family construction are reviewed for consistency with applicable City codes and design and construction standards and specifications, which may include water lines, sanitary sewer lines, storm water retention/detention and drainage systems, streets, curbs, gutters, driveways, sidewalks, and easements. Subsequent to permit issuance, required site inspections are performed.		
2. Re-inspection fee	75.00	**160.00**
Public Works construction permit re-inspection fee. (Billed for each inspection occurrence after primary inspection and first re-inspection.)		
3. Re-submittal fee	**n/a**	**Hourly**

	2017 Fee	**2018 Fee**
Public Works construction permit re-submittal review fee. All permits are allowed 3 reviews at fixed fee rates listed.in the fee schedule. 4th review and other additional reviews are to be billed at hourly rate.		
4. Rockery/retaining wall (plus pass through consultant costs)	**n/a**	**403.00**
5. Clearing and grading permit		
Base charge with or without land use entitlement	**n/a**	**1,637.00**
Charge per disturbed acre with no land use entitlement	**n/a**	**2,060.00**
Charge per disturbed acre with land use entitlement	**n/a**	**2,227.00**
6. Traffic signals		
New signal (plus pass through County costs	**n/a**	**3,439.00**
Signal modificaion (plus pass through County costs)	**n/a**	**2,384.00**
7. "Safe Walk to School" review - residential developments	**n/a**	**2,512.00**
8. Public Works variance	**n/a**	**Hourly**
PARKS AND RECREATION		
1. Picnic shelters (per hour)		
a. Large shelter -		
60 or less individuals :		
Residents	**38.00**	**40.00**
Non-residents	**47.00**	**50.00**
61-75 individuals		
(must reserve both shelters at Blyth Park):		
Residents	**55.00**	**57.00**
Non-residents	**68.00**	**72.00**
b. Small shelter - no more than 15 individuals		
Residents	**18.00**	**19.00**
Non-residents	**22.00**	**24.00**
2. Park at Bothell Landing (per hour)		
Amphitheater		
Residents	**65.00**	**65.00**
Non-residents	**97.00**	**82.00**
Use of electricity	**22.00**	**22.00**
3. Lytle House		
a. Meeting room		
Residents (per hour)	**67.00**	**67.00**
Non-residents (per hour)	**80.00**	**84.00**
b. Site supervisor charge	**22.00**	**23.00**
(3 hour minimum rental when site supervisor required)		
c. Damage deposit	**200.00**	**200.00**

	2017 Fee	**2018 Fee**
d. Damage deposit for reservations with alcohol	**400.00**	**400.00**
4. North Creek Schoolhouse		
a. Meeting room		
Residents (per hour)	**40.00**	**40.00**
Non-residents (per hour)	**48.00**	**50.00**
b. Damage deposit	**100.00**	**100.00**
Long term use agreements may be negotiated by director at a rate different than above, and may include community service projects.		
5. Sportsfields (per hour)		
a. Adult teams on grass	**39.00**	**41.00**
Adult teams on synthetic turf	**55.00**	**57.00**
Youth teams on grass	**20.00**	**21.00**
Youth teams on synthetic turf	**28.00**	**29.00**
b. Tournament events		
Payment in full and tournament bracket or participant roster must be turned in at least four weeks prior to event. Hourly field rates are shown above.		
Adult teams	**200.00**	**206.00**
Youth teams	**100.00**	**103.00**
(Non-refundable deposit applied to the total due)		
Refundable damage deposit	**200.00**	**200.00**
c. Non-prepped sports field		
Adult teams	**33.00**	**34.00**
Youth teams	**17.00**	**17.00**
d. Additional field preparation may be provided by the City at the request of the user upon advance payment of estimated labor and materials costs as determined by the Director or designee.		
6. North Creek field lights (per hour)	**23.00**	**24.00**
7. Commercial use of sportsfields		
a. Synthetic turf (per hour)	**70.00**	**73.00**
b. Grass fields (per hour)	**50.00**	**52.00**
8. Commercial photography (per day)	**105.00**	**109.00**
9. Concessions		
a. Ongoing concessions/vendors (Rate negotiable with Director.)	**10% of Gross Revenue**	**10% of Gross Revenue**
b. Special event/tournament concessions/vendors (per vendor) - applies to all City properties	**$28/day or $52/weekend**	**$29/day or $54/weekend**
10. Other commercial use, per hour (Rate negotiable with Director.)	**75.00**	**78.00**

	2017 Fee	**2018 Fee**
11. Adult softball leagues		
Per game rate	**62.00**	**64.00**
12. Recreation programs		
a. Recreation classes - Cancellation fee		
If class fee is less than $10.00, the cancellation fee is the amount of the class fee.	**10.00**	**10.00**
b. Youth & teen programs	**Per adopted Parks & Rec fee policies**	**Per adopted Parks & Rec fee policies**
~~c. Open gym/drop-in athletics, per night~~	**3.00**	**n/a**
13. Cancellation fee for facility and picnic shelter reservations		
More than 30 days notice of cancellation:	**25% of fee**	**25% of fee**
15 to 30 days notice of cancellation:	**50% of fee**	**50% of fee**
14 days or less notice of cancellation:	**No refund**	**No refund**
14. Disc golf		
Tournament fee, per participant	**5.00**	**5.00**
Disc rental, per set	**8.00**	**8.00**
Disc rental damage deposit	**10.00**	**10.00**
15. City Hall Council Chambers and Study Session Room		
Council Chambers (per hour)		
Residents	**40.00**	**40.00**
Non-Residents	**48.00**	**50.00**
Study Session Room (per hour)		
Residents	**No Charge**	**No Charge**
Non-Residents	**30.00**	**30.00**
After-hours rentals (non-profits/City partners only): Room rates as listed above, plus actual security costs, plus site supervisor.		
Site supervisor charge for after-hours rentals (3 hour minimum when site supervisor required)	**n/a**	**23.00**
Damage Deposit	**200.00**	**200.00**
16. City Hall Plaza (per hour)		
Residents	**65.00**	**65.00**
Non Residents	**97.00**	**82.00**
Use of Electricity	**22.00**	**22.00**
MISCELLANEOUS FEES		
1. Photocopies per page (per imprint) or actual cost if not printed by City	**0.15**	**0.15**
2. Blueprint copies	**Actual Cost**	**Actual Cost**

	2017 Fee	**2018 Fee**
3. Notary fee (includes first 2 signatures)	**10.00**	**10.00**
Each additional person	**10.00**	**10.00**
4. Certified copies (per certification)	**10.00**	**10.00**
Additional pages	**0.15**	**0.15**
5. Custom map requests: For custom requests requiring plotting, a fee of $60 per hour with a 15 minute minimum ($15.00); plus reimbursement for supplies as follows:		
11" x 17" paper	See Community Development section	**4.00**
36" minimum wide plot, per lineal foot		**5.00**
DVD-recordable		**1.00**

Section 2. Unless otherwise specifically stated, Resolution No. 1354 (2016) and prior fee resolutions are hereby rescinded and superseded by this Resolution.

Section 3. On January 1 of each year, the fees set forth in this resolution may increase (if allowed by law) by the rate of increase, if any, of the CPI-W Seattle-Tacoma-Bremerton June to June Index published by the Bureau of Labor Statistics in the year prior, or by the actual increase in the cost of providing the service. Fees will be rounded to the next highest whole dollar.

Section 4. Washington State Sales Tax will be added to fees listed in this resolution where required by State law.

Section 5. The City Manager or Finance Director shall have the right to waive a fee if significant economic development or financial benefit of equal or greater value to the City can be demonstrated.

Section 6. The City Clerk is authorized to make necessary corrections to this resolution including, but not limited to, the correction of scrivener's/clerical errors, references, resolution numbering, section/subsection numbers and any references thereto.

PASSED this 21 day of November, 2017.

APPROVED:

ANDREW J. RHEAUME
MAYOR

ATTEST/AUTHENTICATED:

LAURA HATHAWAY
CITY CLERK

Filed with the City Clerk: November 16, 2017
Passed by the City Council: November 21, 2017
Resolution No. 1370 (2017)

APPENDIX H

FUNDING SOURCE ALTERNATIVES

FUNDING SOURCE ALTERNATIVES

Several funding source alternatives are available to the City for the financing of projects in the CIP. Such alternative are listed below and followed by a brief description.

Grants: Centennial Clean Water Fund (CCWF)
Community Development Block Grant (CDBG)
Community Investment Fund (CIF)
US Economic Development Administration (US EDA)

Loans: Centennial Clean Water Fund (CCWF)
Water Pollution Control State Revolving Fund (SRF)
Public Works Trust Fund (PWTF)
Community Economic Revitalization Board (CERB)

Bonds: Revenue Bonds

Other: Developer Financing
System Development Charge
Utility Local Improvement Districts

CENTENNIAL CLEAN WATER FUND (CCWF)

The Department of Ecology (Ecology) provides both grants and loans for measures to prevent and control water pollution through the Centennial Clean Water Fund. Each biennium, the funds that support the CCWF program are subject to legislative approval.

Grant money is available only to those who can document hardship. Where financial hard ship is determined, the total eligible project cost cannot exceed $10 million and the grant amount cannot be more than half, or $5 million. Hardship is demonstrated when project costs for construction of facilities result in total cost for debt service and operation and maintenance in excess of 1.5 percent of the median household income. A project may be phased and receive grant and loan moneys from several funding cycles to complete the project. In addition, a higher grant amount may be available if the 3-year average local unemployment rate exceeds the 3-year average statewide unemployment rate. Grants require a 50 percent matching fund, which is provided by a mandatory Centennial or SRF loan. If the project is enrolled in Ecology's Small Town Environmental Program, an in-kind match may be used.

Grant funds from the CCWF program are allocated on a competitive basis, therefore a decrease in available funds results in a more competitive arena for potential grantees. Ranking criteria for CCWF grants include the potential for ecological damage of the affected water body, the need for a facility to meet an enforcement or compliance order and the presence or absence of a health emergency based on the existing conditions.

Projects with enforcement orders, compliance orders, or health emergency declarations are considered high priority and receive points in the ranking process.

Non-hardship construction projects are eligible for loans only, with eligibility up to 100 percent of project costs. Facility construction projects are eligible for up to 50 percent of the amount available to SRF, or approximately $33 million for fiscal year 2006.

Eligible reserve capacity is defined differently for the CCWF and SRF programs. Ecology's CCWF program provides funding for wastewater treatment facilities up to 110 percent of capacity to meet existing need and the SRF program provides funding for reserve capacity to handle flows identified for the 20-year projected growth within a service area. The project can serve commercial or industrial customer requirements up to the 20-year projected need.

WATER POLLUTION CONTROL STATE REVOLVING FUND (SRF)

The Department of Ecology also administers the SRF program that provides low interest loans for water pollution control projects. Currently, SRF is offering 20-year loans at 1.5 percent interest rates, and 5-year loans at 0.5 percent interest rates. The primary program requirements are to have an approved facilities plan for treatment works and to demonstrate the ability to repay the loan through a dedicated funding source. The SRF can be used to finance sewer system replacement for the elimination of excessive infiltration and inflow and for the construction of facilities with reserve capacities to accommodate flows corresponding to the 20-year projected growth in the service area. Land acquisition is not eligible for SRF funding. SRF loans can also be utilized for the refinancing of existing (non-SRF) debts used to fund eligible projects started after March 5, 1985.

Eligible applicants for both the CCWF and SRF programs include Washington State counties, cities, towns, conservation districts, or other political subdivisions, municipalities, or quasi-municipal corporations. Other State agencies are not eligible to apply.

TABLE 1

Centennial Clean Water Fund/State Revolving Fund Terms

CCWF/SRF Loan Term	Interest Rate
Up to 5 years	0.5 percent
More than five but less than 20 years	1.5 percent

COMMUNITY DEVELOPMENT BLOCK GRANT (CDBG)

The Community Development Block Grant program is a competitive source of federal funding for a broad range of community development projects. A primary requirement of the CDBG program is that the project must principally benefit at least 51 percent of the low-to-moderate income residents of the project area. The State typically receives about $7 million in federal funds per funding cycle. CDBG has two programs, including General Purpose and Planning Only. The General Purpose program provides grant funds for the design, construction, or reconstruction of water and sewer systems up to the amount of $750,000. The Planning Only program includes projects such as comprehensive plans, community development plans, capital improvement plans, and other plans such as land use and urban environmental design, economic development, floodplain and wetlands management, transportation, and utilities. Planning Only grants are limited to $24,000 for a single applicant or $40,000 for a joint applicant.

Eligible applicants for the CDBG programs include cities and towns with less than 50,000 people or counties with populations less than 200,000.

COMMUNITY INVESTMENT FUND (CIF)

The Community Investment Fund partners with CDBG to fund projects that benefit at least 51 percent low to moderate income residents. An applicant would first apply to the CDGB General Purpose program, and meet the income limits of that program. At the discretion of the Public Work Board, an applicant may be asked to apply to the Community investment Fund. Additional grant funding, in the amount of $1 million may be obtained.

To qualify for CIF, the project must be rated as one of the top three of the local WA-CERT Priority Rating Process, serve a minimum of 51.5 percent low to moderate income residents, and receive at least 65 points with the General Purpose application.

PUBLIC WORKS TRUST FUND (PWTF)

The Public Works Trust Fund is a revolving loan fund designed to help local governments finance public works projects through low-interest loans and technical assistance. The PWTF, established in 1985 by legislative action, offers loans substantially below market rates, payable over periods ranging up to 20 years. To be eligible for the PWTF programs, an applicant must be a local government such as a city, county, or a special purpose utility district. PWTF has four loan programs including Construction, Preconstruction, Planning, and Emergency. PWTF loan terms are summarized below:

TABLE 2

Public Works Trust Fund Terms

Local Match	Interest Rate/Term	Loan Limit
Construction		
15%	0.5%, 20 years	$10,000,000
10%	1.0%, 20 years	
5%	2.0%, 20 years	
Preconstruction(1)		
15%	0.5%, 5 years	$1,000,000
10%	1.0%, 5 years	
5%	2.0%, 5 years	
Planning		
0% (2)	0.0%, 6 years	$50,000
Emergency		
0%(2)	4.0%, 20 years	$500,000

(1) Preconstruction loans can be refinanced to a 20-year term, if the applicant obtains a subsequent PWTF Construction loan.
(2) While a match is not required, it is recommended.

The Construction Program accepts applications once per year in May, and the money becomes available approximately 1 year later. The Preconstruction and Planning programs are open on year-round basis and must be submitted to the Public Works Board prior the 15th of the month to be reviewed at the next Board meeting. These funds become available shortly after the Public Works Board makes their final decision as to the award. Emergency projects must have a locally declared emergency and are applied for on an open cycle depending on the availability of funds. Project expenditures are reimbursable from the date of the declared emergency.

An applicant must have a long-term plan for financing its public works needs. If the applicant is a county or city, it must adopt the 1/4 percent real estate excise tax that is dedicated to public works construction projects. Eligible public works projects include streets and roads, bridges, storm sewers, sanitary sewer collection and treatment systems, and domestic water. Loans are presently offered only for purposes of repair, replacement, rehabilitation, reconstruction, or improvement of existing eligible public works systems. Eligible project costs can include expenses related to serving 20-year forecasted growth as identified in comprehensive plans.

Since substantially more trust fund dollars are requested than are available, local jurisdictions must compete for the available funds. The applications are carefully evaluated, and the Public Works Boards submits a prioritized list of those projects to the Legislature that are recommended to receive low-interest financing. The Legislature reviews the list and indicates its approval through the passage of an appropriation from the Public Works Assistance Account to cover the cost of the proposed loans. Once the

Governor has signed the appropriation bill into law (an action that usually occurs by the following April), those local governments recommended to receive loans are offered a formal loan agreement with appropriate interest rates and terms as determined by the Public Works Board.

The City is eligible for PWTF programs.

COMMUNITY ECONOMIC REVITALIZATION BOARD (CERB)

The Community Economic Revitalization Board's prime mission is to partner with business and industry and local governments to maintain and create jobs. Established by the Legislature in 1982, CERB provides low-interest loans or, in unique circumstances, grants to help finance local public infrastructure necessary to develop or retain stable business and industrial activities. Eligible public facilities include bridges, roads, domestic and industrial water, sanitary sewer, and storm sewer.

Typically, CERB provides loans in the amount of $1 million and, where applicable, grants in the amount of $300,000. The interest rate is tied to the current cost of a 10-year bond and a local match of 10 percent is required.

Eligible applicants include Washington State subdivisions in partnership with private enterprise, including special purpose districts. If there is no economic partner, an applicant can produce a feasibility study that documents realistic job retention or creation. Applications must be submitted 45 days prior to a regularly scheduled CERB Meeting, which typically meets in January, March, July, and November.

US ECONOMIC DEVELOPMENT ADMINISTRATION (US EDA)

US EDA offers competitive grants up to $1 million for projects from Region 10. Projects are selected locally by an economic development district and submitted to Congress for competitive selection among other regions in the US. Similar to CERB, applicants must have an industrial partner ready to proceed or a feasibility study that establishes realistic job creation.

REVENUE BONDS

The most common source of funds for construction of major utility improvements is the sale of revenue bonds. These are tax-free bonds issued by a utility. The major source of funds for debt service on revenue bonds is from monthly sewer service charges. In order to make qualify to sell revenue bonds marketable to investors, the bonds typically have contractual provisions for the utility to meet debt coverage requirements. The City must show that its annual net operating income (gross income less operation and maintenance expenses) is must be equal to or greater than a factor, typically 1.2 to 1.4 times the annual debt service on all par debt. If a coverage factor has not been specified it will be determined at the time of any future bond issues.

DEVELOPER FINANCING

Developers typically fund the construction of extensions to the sewer mains to property within new plats. The developer extensions are turned over to the City for operation and maintenance upon completion. Developer extensions shall be constructed to meet the requirements of the Plan.

SYSTEM DEVELOPMENT CHARGE

In order to finance improvements of general benefit to a sewer utility, such as the City, a system development charge may by adopted. System development charges are usually established as one-time charges assessed against new sewer customers as a way to recover part or all of the cost of additional facilities constructed for their use.

The system development charge or fee is deposited into a construction fund for construction of such facilities. The intent is that all new system customers will pay an equitable share of the cost of the system improvements needed to accommodate growth. Typical types of construction financed by the system development charge are general improvements that benefit the entire system, such as pump stations, gravity sewer lines, force mains, and office and storage space.

UTILITY LOCAL IMPROVEMENT DISTRICTS

Another potential source of funds for improvements comes through the formation of Utility Local Improvement Districts (ULIDs) involving a special assessment made against properties benefiting by the improvements. ULID bonds are further backed by a legal claim to the revenues generated by the utility, similar to revenue bonds.

Sewer system expansion is a frequent application of ULID financing. Typically, ULIDs are formed by the City at the written request (by petition) of the property owners within a specific section of the service area. Upon the receipt of a sufficient number of signatures or petitions, and acceptance by the City council, the local improvement area is formed, and a sewer system is designed for that particular area in accordance with the Plan. Each separate property in the ULID is assessed in accordance with the special benefits the property receives from the wastewater system improvements. A City-wide ULID could form part of a financing package for large-scale capital projects such as sewer line extensions or replacements that benefit all residents in the service area. The assessment places a lien on the property that must be paid in full upon sale of the property. ULID participants have the option of paying their assessment immediately upon receipt, thereby reducing the portion of the costs financed by the ULID bonds.

The advantages of ULID financing, as opposed to rate financing, to the property owner include:

- The ability to avoid interest costs by early payment of assessments.
- If the ULID assessment is paid in installments, it may be eligible to be deducted from federal income taxes.
- Low-income senior citizens may be able to defer assessment payments until the property is sold.
- Some Community Block Grant funds are available to property owners with incomes near or below poverty level. Funds are available only to reduce assessments.

The major disadvantage to the ULID process is that it may be politically difficult to approve formation. The ULID process may be stopped if owners of 40 percent of the property area within the ULID boundary protest its formation. Also, there are significant legal and administrative costs associated with the ULID process, which increases total project costs by approximately 30 percent over other financing options.

APPENDIX I

RECLAIMED WATER FEASIBILITY STUDY

Kennedy/Jenks Consultants

1191 2nd Avenue, Suite 630
Seattle, Washington 98101
206-652-4905
FAX: 206-652-4927

City of Bothell
Reclaimed Water
Feasibility Study

14 February 2013

Prepared for

City of Bothell
9654 NE 182nd Street
Bothell, Washington 98011

K/J Project No. 1197004.00

Table of Contents

List of Tables ..... *v*
List of Figures ..... *vi*
List of Exhibits ..... *vi*
List of Appendices ..... *vi*
List of Acronyms ..... *vi*
Executive Summary ..... *I*

Section 1: Background 1-1

1.1 Introduction 1-1
1.2 Agency Responsibilities and Interests 1-1
1.3 History 1-1
1.4 Purpose and Scope of Study 1-2
1.5 Feasibility Study Design 1-2
1.6 County Reclaimed Water System Overview 1-3
1.6.1 County Reclaimed Water Permit 1-4
1.6.1.1 Chlorine Residual Maintenance 1-4

Section 2: Basis of Planning 2-1

2.1 Study Area Boundary 2-1
2.2 Customer Water Demand Estimates 2-1
2.2.1 Irrigation Demand Estimates 2-1
2.2.2 Commercial and Domestic Water Use Estimates 2-2
2.3 Reclaimed Water System Design Criteria 2-2
2.4 Basis of Cost Estimates 2-4
2.4.1 Capital Costs 2-4
2.4.2 Lifecycle Costs 2-4
2.4.3 Project Financing 2-5
2.5 Methodology for Project Feasibility Determination 2-5

Section 3: Potential Reclaimed Water Customers and Estimated Demands 3-1

3.1 Potential Customer Interview Summary 3-1
3.1.1 Additional Potential Customer Outreach 3-1
3.2 Potential Bothell Reclaimed Water Customers 3-2
3.2.1.1 Bothell Business Park Area and Seattle Times 3-3
3.2.1.2 Schnitzer Business Park Area 3-3

3.2.1.3 University of Washington-Bothell/Cascadia Community College Campus Area 3-3
3.2.1.4 Downtown Revitalization Area 3-3
3.2.2 Potential Customer Area Groupings 3-4
3.3 Potential Reclaimed Water Demands 3-4
3.4 Reclaimed Water Customer Connection Requirements 3-6
3.4.1 Pressure Requirements 3-6
3.4.2 Water Quality Requirements 3-6
3.5 Potential Future Customer Demands 3-6

Section 4: Preliminary Reclaimed Water Distribution System 4-1

4.1 King County Reclaimed Water System Point of Connection 4-1
4.2 Hydraulic Modeling 4-1
4.2.1 Model Run Summary 4-1
4.3 Preliminary Reclaimed Water System Alignment 4-2
4.4 Reclaimed Water System Pressures 4-3
4.4.1 Booster Pump Station Requirements 4-6
4.5 Chlorine Residual Maintenance 4-6
4.5.1 DOH and Ecology Reclaimed Water Requirements 4-6
4.5.2 King County Chlorine Residual Maintenance 4-6
4.5.3 Estimated Chlorine Residual at King County Connection 4-7
4.6 Bridge Crossing over I-405 Freeway 4-7
4.7 Reclaimed Water Distribution System Summary 4-9

Section 5: Alternative Costs and Feasibility 5-1

5.1 Feasibility Analysis 5-1
5.2 Estimated Capital Construction Costs 5-1
5.3 Estimated Operations and Maintenance Costs 5-2
5.4 Estimated 20-year Lifecycle Costs 5-3
5.5 Potential Reclaimed Water Revenues 5-4
5.6 Feasibility Analysis 5-6

Section 6: Potential Funding Sources Overview 6-1

6.1 Funding Sources for Reclaimed Water Projects in Washington 6-1
6.2 Loan Programs 6-2
6.2.1 State Water Pollution Control Revolving Fund Loan Program 6-2
6.2.2 Centennial Clean Water Program 6-2
6.2.3 Public Works Trust Fund Loan Program 6-3
6.2.4 USDA Rural Development Loan Program 6-3
6.3 Bond Financing 6-3
6.3.1 General Obligation Bonds 6-3
6.3.2 Revenue Bonds 6-3

6.3.3 Utility Local Improvement District 6-3
6.4 Grants 6-4
6.4.1 Reclaimed Water Grants Program 6-4
6.4.2 Centennial Clean Water Program 6-4
6.4.3 USDA Rural Development Grant Program 6-5
6.4.4 Community Development Block Grant Program 6-5
6.4.5 State and Tribal Assistance Grant Program (STAG) 6-5
6.4.6 Five Star Restoration Program 6-5
6.5 Other Funding Options 6-5
6.5.1 Voter Approved Taxes 6-5
6.5.2 Developer Contributions and Latecomer Agreements 6-6
6.5.3 Property Owner Credit Offsets 6-6
6.5.4 Voluntary Customer Contributions 6-6
6.6 Funding Summary 6-7

Section 7: Conclusions and Recommendations 7-1

7.1 Conclusions 7-1
7.2 Recommendations 7-2
7.3 Policy and Implementation Considerations 7-3
7.3.1 Institutional Arrangements 7-3
7.3.2 Reclaimed Water Retailer Roles and Responsibilities 7-3
7.3.2.1 Design, Construction and Ownership of Reclaimed Water Facilities 7-4
7.3.2.2 Distribution System Operations and Maintenance 7-4
7.3.2.3 Water Quality Monitoring 7-4
7.3.3 Customer Responsibilities 7-4
7.3.4 Agreements 7-5
7.3.4.1 Sale and Distribution Agreement 7-5
7.3.4.2 End User Agreement 7-5

Section 8: References 8-1

Table of Contents (cont'd)

List of Tables

ES1: Potential Customer Interview Summary
ES2: City of Bothell Potential Reclaimed Water Customers and Estimated Demands
ES3: City of Bothell Potential Reclaimed Water System Alignment
ES4: City of Bothell Potential Reclaimed Water Infrastructure Cost Estimates
ES5: Operations and Maintenance Cost Components
ES6: Operations and Maintenance Costs for Each Alternative
ES7: Estimated Annual Reclaimed Water Revenue by Alternative
ES8: Feasibility Analysis at 1% Interest Rate
ES9: Net Present Value Evaluation at 3.1% Interest Rate
2.1: Pasture and Turf Agronomic Irrigation Rates
2.2: Reclaimed Water System Design Criteria
2.3: Applied Mark-ups for Conceptual Level Cost Estimates
3.1: Potential Customer Interview Summary
3.2: City of Bothell Potential Reclaimed Water Customers and Estimated Demands
3.3 Existing Bothell Drinking Water Distribution System by Location
4.1: City of Bothell Potential Reclaimed Water System Alignment
4.2: Comparison of System Pressures for All Non-Irrigation Uses
4.3: Comparison of System Pressures for All Irrigation Uses
4.4: Booster Pump Station Design Criteria
5.1: Estimated Capital Construction Costs for Each Alternative
5.2: Operations and Maintenance Cost Components
5.3: Annual Operations and Maintenance Costs for Each Alternative
5.4: 20-year Life Cycle Cost Estimates
5.5: 70% Discounted Monthly Meter Charges by Classification
5.6: 70% Discounted Water Usage Rates by Classification
5.7: Potential Reclaimed Water Demands by Classification
5.8: Estimated Annual Reclaimed Water Revenue by Alternative
5.9: Feasibility Analysis at 1% Interest Rate
5.10: Net Present Value Evaluation at 3.1% Interest Rate
6.1: Grant and Loan Funding Available for Washington Reclaimed Water Projects

Table of Contents (cont'd)

List of Figures

4.1 I-405 Bridge Crossing

List of Exhibits

A Study Area and Potential RW Customers
B Potential Reclaimed Water Customers
C Potential Reclaimed Water Pipeline and Demands

List of Appendices

A North Creek Pump Station Drawings and Schematics
B Brightwater Reclaimed Water Permit
C Customer Outreach Summary Report
D Customer Metering Technical Memorandum
E Cost Estimates
F 2012 City of Bothell Water Rates
G Alternative Feasibility Analyses

List of Acronyms

%	percent
AACE	American Association of Cost Engineers
Blvd	Boulevard
CF	cubic feet
CCF/yr	Hundred Cubic feet per year
City	City of Bothell
County	King County Department of Natural Resources, Wastewater Treatment Division
CUD	Community utility district
CWSRF	Clean Water State Revolving Fund
DOE	Department of Ecology
DOH	Department of Health
ENR	Engineering News Record
EPA	U.S. Environmental Protection Agency

List of Acronyms

Fps	feet per second
gal/d-cap	gallons per day per capita
gpd	gallons per day
Health	Washington State Department of Health
gpm	gallons per minute
HQ	Headquarters
HUD	U.S. Department of Housing and Urban Development
IDI	In-depth Interview
Kennedy/Jenks	Kennedy/Jenks Consultants
kWh	kilowatt -hour
LID	Local improvement districts
M	million
MBR	Membrane bioreactor
MGD	Million gallons per day
mg/L	milligram per liter
MOA	Memorandum of Agreement
NPV	net present value
NPW	Net Present Worth
O&M	operations and maintenance
PRV	Pressure Reducing Valve
psi	pounds per square inch
PVC	polyvinyl chloride
PWTF	Public Works Trust Fund
RCW	Revised Code of Washington
SCADA	supervisory control and data acquisition
STAG	State and Tribal Assistance Grant Program
SRF	State Water Pollution Control Revolving Fund Loan Program
Study	City of Bothell Reclaimed Water Feasibility Study
ULID	Utility local improvement districts
USDA	U.S. Department of Agriculture
UW	University of Washington-Bothell
WAC	Washington Administrative Code
WRCC	Western Regional Climate Center
WSDOT	Washington State Department of Transportation

Executive Summary

The City of Bothell (City) and King County Department of Natural Resources, Wastewater Treatment Division (County) jointly funded this reclaimed water feasibility study to investigate options for using reclaimed water in the City. The Memorandum of Agreement (MOA) between the City and County signed in June 2010 to fund the feasibility study comes after nearly ten (10) years of discussion between the City, County and potential reclaimed water customers in the City.

The study reviews opportunities in the City for distribution and use of Washington Class A reclaimed water produced at the County's Brightwater Treatment Plant. Potential uses investigated include landscape irrigation, agricultural irrigation of turf and certain crops and other allowable commercial and industrial uses.

When complete, it is anticipated the City of Bothell Reclaimed Water Feasibility Study (Study) will serve as the foundation for discussions between the City and County about potential opportunities for the City to construct the necessary reclaimed water distribution facilities as retailer of water provided by the County as a wholesaler.

Agency Responsibilities and Interests

King County provides regional wastewater services in the City through long-term contracts. Under these contracts, the County must provide adequate facilities to intercept, transport, treat and discharge wastewater in a manner prescribed by local, state and federal regulations. A component of the County's wastewater mission is to reclaim and beneficially reuse wastewater products such as reclaimed water and biosolids. In addition, reducing reliance on the Puget Sound for effluent disposal is of primary importance in the region.

The City of Bothell supplies drinking water within its designated geographic boundaries directly and to others through contracts with local water districts. Long term water supply projections indicate the City has adequate contracts to meet the City's drinking water demands for the foreseeable future. However, there appears to be interest from customers in the City to obtain Class A Reclaimed Water from the County's for uses landscape irrigation, commercial and industrial uses, wetland enhancement and other allowable uses. The City is interested in sustainability and economic development opportunities to promote growth and an environmental ethic in the City.

History

In 2005, after several years of negotiation, the City and County entered into a MOA regarding Mitigation for the Brightwater Project. The MOA committed the two entities to collaborate on opportunities for using reclaimed water from Brightwater in the City. During this time, the City updated its comprehensive plan to investigate the feasibility of using reclaimed water produced at the Brightwater facility if found to be cost-effective.

In addition to the MOA, between 2003 and 2010 the City and County have had ongoing discussions with potential reclaimed water customers in the City, including the University of Washington, Cascadia Community College, Seattle Times, and Bothell Business Park to discuss possible uses of reclaimed water.

The 2005 MOA and the ongoing discussions with potential reclaimed water customers resulted in the 2010 MOA between the City and County to conduct the Study and hired a consultant to complete the work.

Purpose and Scope of Study

The purpose of the study is to explore the feasibility of the City developing and operating reclaimed water distribution facilities inside the City limits using water delivered from the Brightwater Treatment Plant by the County. The scope of the study is to identify potential reclaimed water users, estimate seasonal reclaimed water demands, develop preliminary reclaimed water distribution alignments, estimate capital, operations and maintenance costs over a 20-year lifecycle, identify potential funding sources and compile the study along with conclusions, recommendations and next steps into a final written report. Once complete, the final report would then be used as a basis for negotiations between the City and County to determine the level of interest of the City retailing reclaimed water in the City's service area supplied by the County as wholesaler.

The geographic scope of the study is shown on Exhibit A and is within the City's water service area. The study area is divided into four locations: 1) The Bothell Business Park and Seattle Times; 2) Schnitzer North Creek Business Park; 3) University of Washington and Cascadia Community College campuses; and, 4) Downtown Bothell. These study locations were selected for several reasons.

1. All four locations have potential customers interested in using reclaimed water, some of which have expressed a long standing interest in using reclaimed water.
2. The Bothell Business Park, Seattle Times and the Schnitzer North Creek Business Park were selected for their proximity to the Brightwater South Backbone which coveys Class A Reclaimed Water through the Bothell Business Park.
3. In the past, the University of Washington and Cascadia campuses have expressed an interest in using reclaimed water for their existing campus and building expansions that could provide for such uses as toilet flushing, landscape irrigation, water features and cooling towers.
4. The downtown area is undergoing a major revitalization and is being considered for a community utility district for energy purposes. The Mayor and City Council specifically asked the utility, during approval of the MOA, to study using reclaimed water in the downtown revitalization and as an incentive for economic development in a green city.

Potential Customer Interview Summary

Interviews were conducted among thirty-one people representing eighteen organizations identified by the City and County as potential reclaimed water customers. Data Instincts and Kennedy/Jenks Consultants (Kennedy/Jenks) conducted the interviews on 7-9 November 2011 in the Bothell area at potential customers' places of business. The interviews sought to determine the respondents' interest in switching to the use of reclaimed water, price expectations, concerns and attitudes and to identify potential opportunities or barriers for the project.

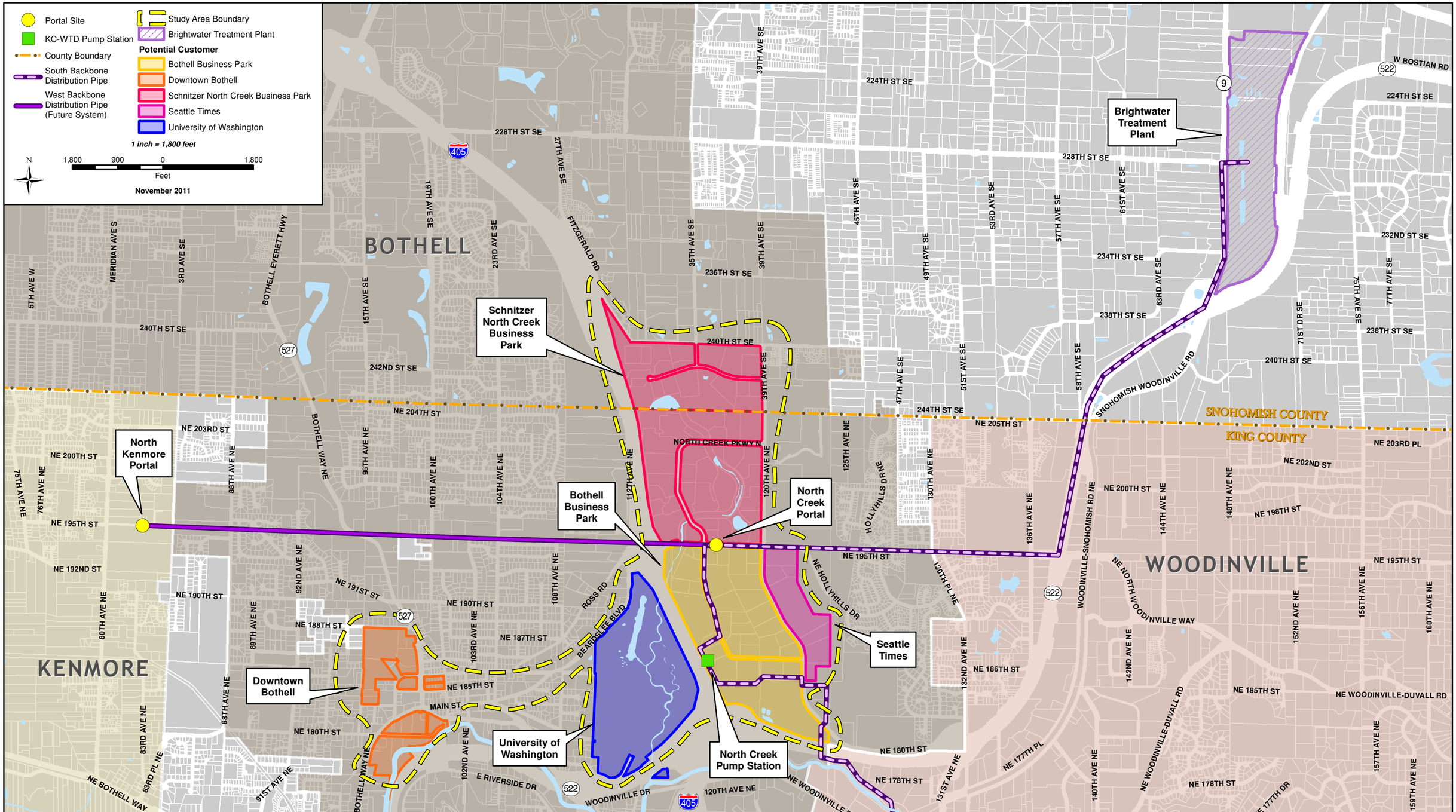

King County
Department of
Natural Resources and Parks
Wastewater Treatment Division

The information included on this map has been compiled from a variety of sources and is subject to change without notice. King County makes no representations or warranties, express or implied, as to accuracy, completeness, timeliness, or rights to the use of such information. This document is not intended for use as a survey product. King County shall not be liable for any general, special, indirect, incidental, or consequential damages including, but not limited to, lost revenues or lost profits resulting from the use or misuse of the information contained on this map. Any sale of this map or information on this map is prohibited except by written permission of King County.

File Name: Q:\\WTD\Projects\BW_Reuse\Projects\bothell_sites.mxd - Shari Cross

Exhibit A: Study Area and Potential RW Customers

Bothell Reclaimed Water Feasibility Study

Potential Customers

Interviews were conducted with the following potential customers:

- AT&T
- Schnitzer Business Park
- Bothell Business Park
- Seattle Times
- City of Bothell
- University of Washington Bothell
- Cascadia Community College
- Village Center Senior Housing
- Weidner Apartments
- McMenamins
- CamWest Development
- MacDonald-Miller Facility Solutions
- General Dynamics
- T-Mobile
- MOHR Partners
- Northwest Naturals
- Washington Complete Construction
- Waterside Asset Management

All interviewees were interested in using reclaimed water for a variety of uses including landscape irrigation, cooling towers, decorative fountains, sewer cleaning, toilet flushing and other uses. Exhibit B presents the potential reclaimed water customers included in this study.

Table ES1 summarizes the results of the customer interview questions.

Table ES1: Potential Customer Interview Summary

Interview Questions	Most Common Answer
Primary reason to switch?	• Being Green/environmentally friendly • Public Perception/Approval
Greatest Concern?	• Price of Water • Cost of infrastructure to switch
Thoughts on Cost?	• 70% of potable water cost
Other Concerns?	• Public perception of health and safety • Water Quality • Access to information for their customers

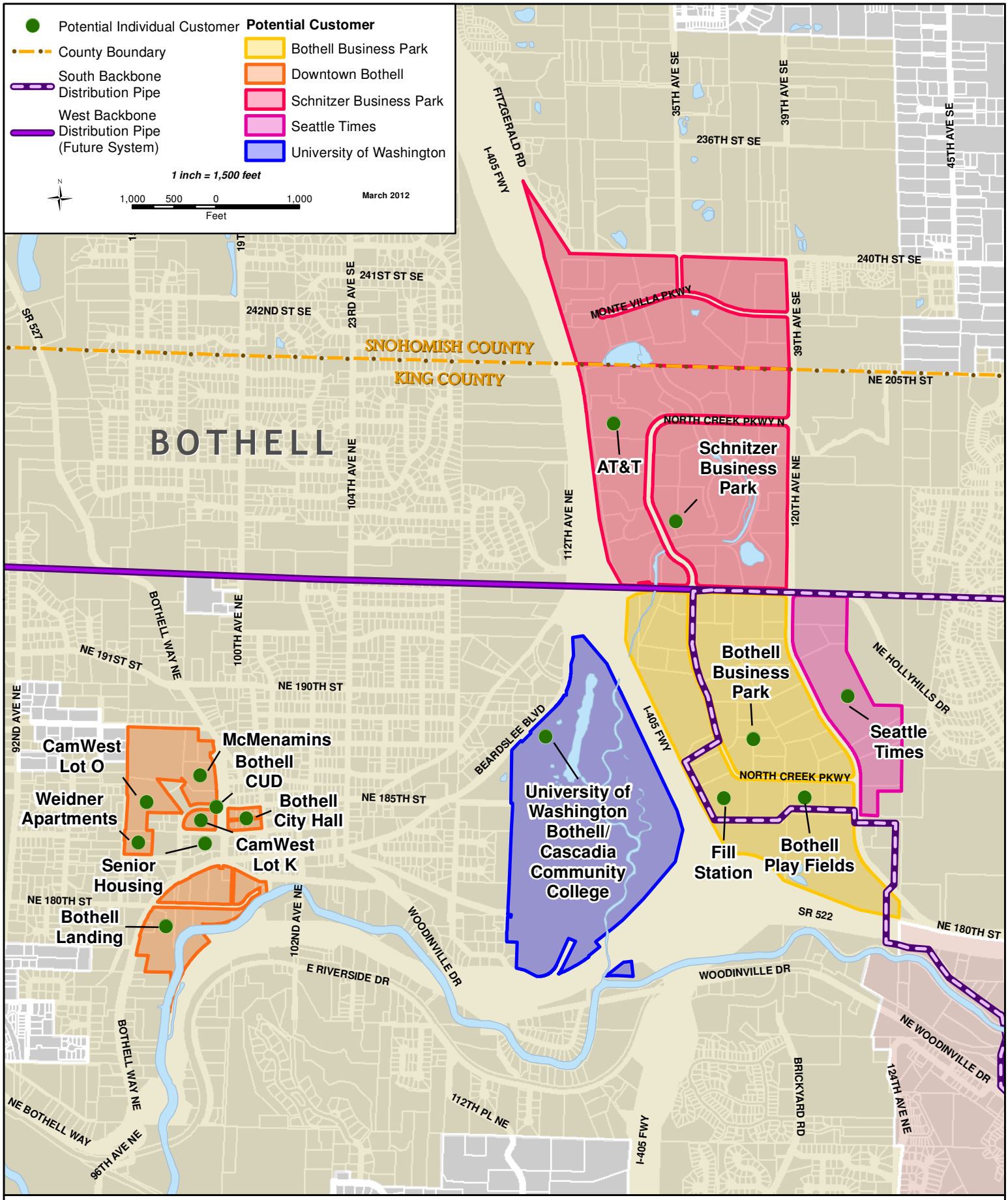

King County
Department of Natural Resources and Parks
Wastewater Treatment Division

The information included on this map has been compiled from a variety of sources and is subject to change without notice. King County makes no representations or warranties, express or implied, as to accuracy, completeness, timeliness, or rights to the use of such information. This document is not intended for use as a survey product. King County shall not be liable for any general, special, indirect, incidential, or consequential damages including, but not limited to, lost revenues or lost profits resulting from the use or misuse of the information contained on this map. Any sale of this map or information on this map is prohibited except by written permission of King County.

File Name: Q:\\WTD\Projects\BW_Reuse\Projects\bothell_exB_letter.mxd - Shari Cross

Exhibit B:
Potential Reclaimed Water Customers

Bothell Reclaimed Water Feasibility Study

Potential Customer Area Groupings

The potential reclaimed water customers were separated into four areas to allow for geographic groupings for use in development of preliminary reclaimed water distribution system alignments. These groupings are:

- **Area 1A** - Bothell Business Park Area and the Seattle Times, only.
- **Area 1** - Bothell and Schnitzer Business Park Areas and the Seattle times.
- **Area 2** – University of Washington-Bothell and Cascadia Community College along with other potential uses across Iinterstate-405 (I-405) between the business parks and downtown Bothell.
- **Area 3** –Downtown Bothell revitalization area.

Potential Reclaimed Water Demands

Kennedy/Jenks then calculated water demands based on estimated water meter information from the interested potential customers. These water demands are summarized in Table ES2. The demands were separated into two seasons for designing distribution system alignments - a low season demand representing average use that is consistent throughout the year and a high season demand due to summer irrigation.

As Table ES2 shows, the greatest water demands are in Areas 1A and 1 for the two business parks and Seattle Times. Area 2 shows low current demands, but discussions with the City indicate this area could have a larger demand in the future with planned developments. Area 3 in the downtown revitalization area has moderate demands. The flow is expected to double in all areas during the summer with the additional irrigation demand.

Reclaimed Water Customer Connection Requirements

Potential reclaimed water customers will be using the water for a variety of applications. Customer connection requirements for these uses are summarized below.

- **Pressure** – The reclaimed water system will need to provide pressures close to the existing pressures in order for existing irrigation systems to work. Existing pressures in the water system are generally 110-115 pounds per square inch (psi) in the business parks, 85-90 psi around the college campuses and 80-85 psi in the downtown area. Irrigation systems generally require 60 to 100 psi. A booster station will be required to meet the existing water system pressures as the pressure at the point of connection is not sufficient. For non-irrigation connections, pressure reducing valve (PRVs) may need to be added based on the current use of them to reduce water system pressures down to 60 psi.

- **Water Quality** – The County will provide chlorinated Class A reclaimed water, as required by their operating permit, and will monitor pH. Additional monitoring and water quality concerns will need to be negotiated on a case by case basis with individual customers. There is no anticipated need for the City to provide further chlorination of the reclaimed water throughout the distribution system.

Table ES2: City of Bothell Potential Reclaimed Water Customers and Estimated Demands [a]

Potential Customer	Area	Non-Irrigation Demand (CCF/yr)	Irrigation Demand (April - September) (CCF/Season)	Non-Irrigation Demand (gpd)	Irrigation Demand (April - September) (gpd)
AT&T	1	44,157	6,100	90,500	24,940
Schnitzer Business Park	1	0	21,407	0	87,500
Bothell Business Park	1, 1A	0	9,800	0	40,060
City of Bothell Playfields	1, 1A	0	1,736	0	7,100
Seattle Times	1, 1A	4,397	5,519	9,020	22,560
Fill Station	1, 1A	3,029	0	6,210	0
UWB/CCC	2	0	2,599	0	10,630
City of Bothell City Hall	3	0	96	0	400
City of Bothell River Front	3	0	1,446	0	5,910
Senior Housing	3	1,293	50	2,660	160
Weidner Apartments	3	1,815	50	3,720	210
McMenamins	3	1,480	852	3,040	3,490
CamWest Development - Lot O	3	1,044	744	2,140	3,050
CamWest Development - Lot K	3	454	50	930	160
Bothell CUD	3	0.14	0	10	0
	Total:	**57,670**	**50,450**	**118,230**	**206,170**
			Total (MGD):	**0.12**	**0.21**
				Total Demand (MGD):	**0.32**

Abbreviations:

CCF = Hundred Cubic Feet
gpd = gallons per day
MGD = millions gallons per day

Notes:

a Data sources include water records, master planning documents, agronomic irrigation rates, and anticipated housing units and estimations.

Preliminary Reclaimed Water System

The following briefly summarizes requirements for the Bothell reclaimed water system to connect to the King County South Segment.

King County Reclaimed Water System Point of Connection

The 30-inch King County Reclaimed Water South Backbone distribution pipe can be accessed along North Creek Parkway and NE 195th Street in the Business Parks. The Bothell Reclaimed water system would connect to the King County distribution pipe and be directed to a booster station for increasing system pressure. The location of the point of connection and the booster station will be determined upon further investigation. King County will maintain a chlorine residual at the point of connection that meets all regulatory requirements within the entirety of the Bothell reclaimed water system.

Booster Pump Station Requirements

As available water pressure at the point of connection is not sufficient to meet all Bothell customer requirements, a booster pump station will be installed. It is assumed that the booster pump station will be a packaged system. The booster station will increase pressure such that the discharge pressure will meet the existing pressure of 110-115 psi in the water system. The booster system will include flow metering from the point of connection, supervisory control and data acquisition (SCADA) controls and will be able to meet flows in the range of 90 to 360 gallons per minute (gpm). One duty low-flow pump, one peak high-flow pump and one standby high-flow pump will be provided to meet average and peak daily demands throughout the year.

Preliminary Distribution System Alignment Alternatives

Six different distribution system alternatives were modeled using EPANET in order to provide service to different combinations of customers organized by geographic groupings. These alternatives were selected based upon different levels of capital investment in infrastructure ranging from providing reclaimed water to a few customers closest to the North Creek Fill Station to developing a system that would provide reclaimed water to all listed customers.

These alternatives include:

- **Alternative A** – Distribution system connected to Bothell Business Park, Bothell Playfields, North Creek Fill Station and Seattle times, only.
- **Alternative B** – Distribution system connected to Bothell and Schnitzer Business Parks, Bothell Playfields, North Creek Fill Station, Seattle Times and AT&T.
- **Alternative C** – Distribution system connected to all areas described in Alternative B and University of Washington-Bothell/Cascadia Community College.
- **Alternative D** – Distribution system connected to all areas described in Alternative 2 and the Downtown revitalization area, but not UW.
- **Alternative E** – Distribution system connected directly to Downtown revitalization area, only.

- **Alternative F** – Distribution system connected to all potential customers including Bothell Business Park, Bothell Playfields, North Creek Fill Station, Seattle times, University of Washington Bothell/Cascadia Community College, Schnitzer Business Park and Downtown revitalization area.

Exhibit C presents the preliminary alignment of the distribution systems, where the six alternatives serve different combinations of Areas 1, 1A, 2 and 3. Exhibit ES-C also presents potential customer demands and shows the generalized area for the point of connection to the King County reclaimed water system and booster pump station.

Table ES3 summarizes the alternatives and the areas served under each as well as the lineal feet of pipe in each alternative.

Table ES3: City of Bothell Potential Reclaimed Water System Alignment

		Lineal Feet of Pipe			
Alternative	**Area(s) Served**	**4-inch**	**6-inch**	**8-inch**	**Comments**
A	1A	0	4,900	2,450	Bothell BP & Seattle Times only
B	1	0	9,880	2,450	Bothell/Schnitzer BP & Seattle times
C	1 & 2	0	12,580	2,450	Bothell/Schnitzer BP, Seattle times & UW
D	1 & 3	5,850	17,080	2,450	Bothell/Schnitzer BP & Seattle times & Downtown
E	3	5,850	7,200	2,450	Downtown only
F	1, 2 & 3	5,850	17,080	2,450	All potential customers

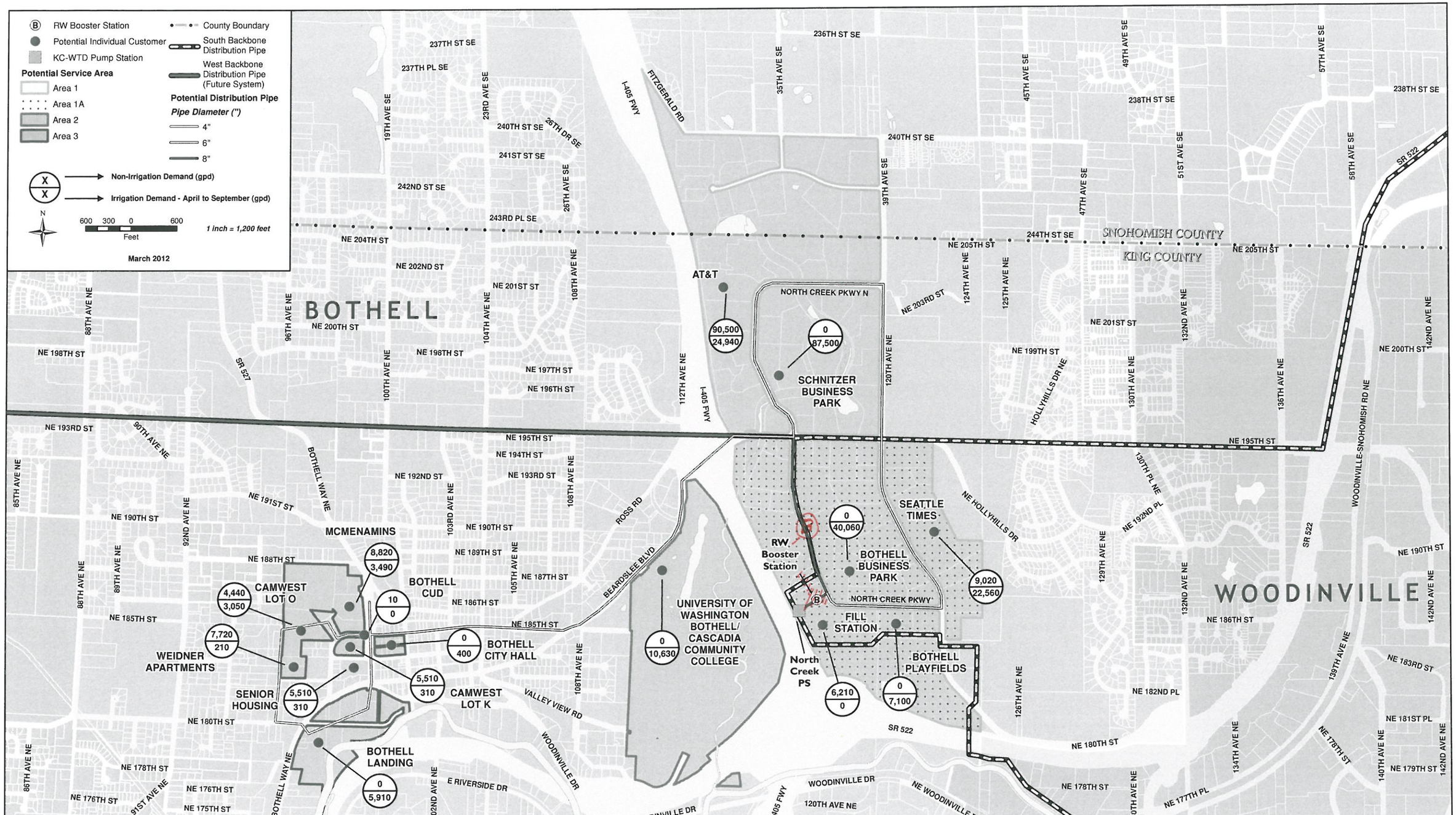

King County
Department of
Natural Resources and Parks
Wastewater Treatment Division

The information included on this map has been compiled from a variety of sources and is subject to change without notice. King County makes no representations or warranties, express or implied, as to accuracy, completeness, timeliness, or rights to the use of such information. This document is not intended for use as a survey product. King County shall not be liable for any general, special, indirect, incidental, or consequential damages including, but not limited to, lost revenues or lost profits resulting from the use or misuse of the information contained on this map. Any sale of this map or information on this map is prohibited except by written permission of King County.

File Name: Q:\\WTD\Projects\BW_Reuse\Projects\bothell_exC.mxd - Shari Cross

Exhibit C: Potential Reclaimed Water Pipeline and Demands

BOTHELL RECLAIMED WATER FEASIBILITY STUDY

Capital Costs

Capital costs developed for each alternative are summarized in Table ES4. Capital costs are divided into four components depending upon the ownership of the property or facility. The four components and associated assumptions include:

1. **Point of Connection** – including connection to King County South Segment reclaimed water pipeline and booster pump station. No property acquisition costs were included because the location of the pump station may be on City-owned property.

2. **Distribution System Backbone** – including main transmission line installation, valves, fittings, appurtenances, paving, and traffic control.

3. **Meter Installation and Main Connection** – individual reclaimed water meter and vault installation and connection to transmission main.

4. **Private Side Connection** – estimated piping and installation downstream of the reclaimed water meter.

Table ES4: City of Bothell Potential Reclaimed Water Infrastructure Cost Estimates

Alternative	Point of Connection ($)	Distribution System ($)	Service Connection ($)	Private Side Connection ($)	Total Capital Cost ($)	Total Capital Cost ($) +50%/-30%
A	$273,000	$1,119,000	$394,000	$60,000	$1.84M	$2.77M/$1.29M
B	$273,000	$1,855,000	$497,000	$160,000	$2.78M	$4.18M /$1.95M
C	$273,000	$2,529,000	$534,000	$207,000	$3.54M	$5.31M /$2.48M
D	$273,000	$3,939,000	$786,000	$288,000	$5.28M	$7.93 M /$3.70M
E	$273,000	$2,469,000	$290,000	$128,000	$3.16M	$4.74M /$2.21M
F	$273,000	$3,939,000	$823,000	$335,000	$5.37M	$8.05M /$3.76M

Notes:

Cost Estimates include the following markups:

7% for Contractor General Conditions

12% for Contractor Overhead and Profit

9.5% for Sales Tax

35% for Contingency

30% for Engineering, Legal and Administrative Costs

Cost estimates are consistent with an AACE Class 5 Order of Magnitude estimate and have an accuracy of +50%/-30%

Operation and Maintenance Costs

Operations and maintenance costs were subdivided into six components to present more detailed estimates.

Table ES5 summarizes the different cost components and the assumptions associated with each.

Table ES5: Operations and Maintenance Cost Components

O&M Component	Assumptions
General Operations	Assumed 32 hours per month at a $75 labor rate. Hours are included for supervision, troubleshooting and miscellaneous tasks.
Administration	Assumed 32 hours per month at a $75 labor rate. Hours are included for meter reading, customer billing and billing inquiries.
Sinking Fung Meter Replacement	Assumed $500 per meter per year for meter replacement.
Pump Station Maintenance	Assumed to be 7% of the pump station capital cost.
Pipeline Maintenance	Assumed to be $10,000 per mile of pipeline.
Power Cost	Puget Sound Energy rates for General Service used. Rates are $0.091386/kWh (October-March), $0.088288/kWh (April-September) and $24.55/month for three phase power. Assumed six month operation of small booster pump and six month operation of large booster pump.

Table ES6 presents the estimated operations and maintenance cost associated with each alternative. The cost for each component is listed based on the assumptions presented above.

Table ES6: Operations and Maintenance Costs for Each Alternative

Alternative	A	B	C	D	E	F
Pipe Length (Miles)	1.39	2.34	2.85	4.81	2.94	4.81
Number of Meters	3	5	7	13	8	15
General Operations	$14,400	$14,400	$14,400	$14,400	$14,400	$14,400
Administrative	$21,600	$21,600	$21,600	$21,600	$21,600	$21,600
Sinking Fund Meter Replacement	$1,500	$2,500	$3,500	$6,500	$4,000	$7,500
Pump Station Maintenance	$5,250	$5,250	$5,250	$5,250	$5,250	$5,250
Pipeline Maintenance	$13,900	$23,400	$28,500	$48,100	$29,400	$48,100
Electricity	$4,905	$4,905	$4,905	$4,905	$4,905	$4,905
TOTAL:	**$62,000**	**$73,000**	**$79,000**	**$101,000**	**$80,000**	**$102,000**

Feasibility

Feasibility is dependent upon the context and purpose in which a project is being evaluated. For this Study, feasibility has been defined based on the ability of specific alternatives to fund the capital construction costs and annual operation and maintenance (O&M) costs with projected revenues from sales of reclaimed water to potential customers over a 20 year period. Each of the six alternatives was evaluated using this feasibility metric using a 20-year "net present worth" analysis considering the time value of money.

In order to evaluate the feasibility of each alternative, assumptions regarding financing were made. For this analysis, it was assumed that the Bothell reclaimed water system would be fully financed with long-term loans. However, grant funding and other funding mechanisms should be investigated as the project develops in order to help offset capital expenditures.

The feasibility analysis considers capital costs, operation and maintenance costs, and potential reclaimed water revenue at 70% of the potable water rate. Two issues not included in the feasibility analysis are those for the wholesale reclaimed water rate charged by the County and the lost revenue to the City's existing potable water utility. Ultimately, the negotiations between the City and County regarding these two issues will likely impact the feasibility study calculations and, therefore, the feasibility of alternatives. For the purposes of the Study, it was assumed these negotiations would be conducted after the completion of the Study considering specific alternatives and estimated flows developed for specific alternatives deemed feasible. Ultimately, the negotiations between the County and City regarding these factors and a final reclaimed water retail rate will impact the net present value calculation; therefore, the feasibility of the alternatives is an initial screening of the alternatives intended to inform further negotiations."

Reclaimed Water Revenues

The revenue generated from the sale of reclaimed water will provide the primary financing to build, operate and maintain the reclaimed water system. Revenue is estimated by adding the anticipated annual meter cost with anticipated usage cost.

As observed in the customer outreach interviews, potential customers were willing to pay for reclaimed water if the rate was 70 percent (%) of the current potable water rate. Annual revenue from the distribution of reclaimed water was estimated using 70% of the City's current water rates, meter charges and residential unit charge and the potential demand and meter size. Tables ES7 presents the estimated annual revenue from the sale of reclaimed water.

Table ES7: Estimated Annual Reclaimed Water Revenue by Alternative

Alternative	Usage Charge	Meter Charge	Residential Unit Charge	Estimated Annual Revenue
A	$84,700	$1,300	$0.00	$86,000
B	$290,400	$2,400	$0.00	$293,000
C	$300,900	$2,700	$0.00	$304,000
D	$313,900	$4,400	$11,600	$329,900
E	$23,500	$2,000	$11,600	$37,100
F	$324,400	$4,700	$11,600	$340,700

Feasibility Analysis

The feasibility analysis consists of comparing the system costs of debt service, operations and maintenance with the estimated revenue for each alternative on an annual basis for the 20 year period. The annual net accumulation is the revenue minus cost for each alternative and was calculated for each year of the analysis. If the accumulation was positive, the revenue generated that year was able to finance all the necessary cost associated with the system. If the accumulation is negative, there is not sufficient revenue to fund the system. The Net Present Value (NPV) of each alternative was calculated by taking the sum of the appropriately discounted yearly accumulations.

The feasibility analysis was completed using two loan options that conservatively estimate the project finances under a scenario where development of the reclaimed water infrastructure for providing reclaimed water services in the City is funded entirely by local, low interest loans. The two options considered include a loan at 1.0% interest through the Washington Public Works Trust Fund (PWTF) or a loan at 3.1% interest through the Washington Clean Water State Revolving Fund (CWSRF) program. The NPV analysis was performed using inflation and discount rates of 3.0. As summarized in the basis of planning, system costs were estimated by assuming a 20-year payback of capital costs via loan programs.

In order to anticipate increased demand and customers to the system, starting in year three, one additional meter was assumed to be added every five years. With the new meter cost, additional funds were added to the meter replacement sinking fund. Reclaimed water demands, electrical costs and revenues were also increased 5% with each additional water meter added. Alternative D and F included both area 1 and 3 and, therefore, had two new meters added every five years to account for the larger potential for additional demand due to the larger distribution area.

The feasibility analyses for the 1.0% and 3.1% loan scenarios are presented in Tables ES8 and ES9, respectively. Detailed feasibility analysis spreadsheets are included in Appendix G. A positive NPV demonstrates that a project is feasible because it can generate excess revenue compared to costs of the system. A negative NPV demonstrates that the project will not provide revenue to pay for all costs associated with the system.

As shown in the tables, Alternatives B and C are feasible, depending on the interest rate and funding terms obtained for the project. Over the 20 year period, the revenues generated from these alternatives will provide for the cost of constructing, maintaining and operating these systems. These analyses do not consider the opportunity for funding a portion of the project through grants that has strong potential for this project or the useful service life of reclaimed water pipelines that is anticipated to be 50 years or more.

Table ES8: Feasibility Analysis at 1% Interest Rate

Alternative	Potential Revenues	Net Present Value of Expenses (1% Interest)	Net Present Worth (1% Interest)	Feasibility Result
A	$1,464,000	($2,793,000)	($1,329,000)	Negative
B	$4,980,000	($3,759,000)	$1,221,000	Positive
C	$5,164,000	($4,493,000)	$671,000	Positive
D	$6,099,000	($6,438,000)	($339,000)	Negative
E	$631,000	($4,204,000)	($3,573,000)	Negative
F	$6,299,000	($6,522,000)	($223,000)	Negative

Table ES9: Net Present Value Evaluation at 3.1% Interest Rate

Alternative	Potential Revenues	Expenses	Net Present Worth	Feasibility Result
A	$1,464,000	($3,093,000)	($1,629,000)	Negative
B	$4,980,000	($4,212,000)	$768,000	Positive
C	$5,164,000	($5,069,000)	$95,000	Positive
D	$6,099,000	($7,298,000)	($1,199,000)	Negative
E	$631,000	($4,718,000)	($4,087,000)	Negative
F	$6,299,000	($7,395,000)	($1,096,000)	Negative

Funding Sources

Numerous funding sources exist for utilities to finance capital improvements. In general, debt financing allows a municipality to undertake a larger share of its capital improvements program in the near term and/or mitigate immediate impacts on rates. Capital costs for implementing a reclaimed water program are often financed through long-term debt, such as water and wastewater revenue bonds and low-interest loans. Long-term debt is usually paid back over 20–30 years, so this method of financing helps to equate expenditures with the useful life of the facilities. Utility Local Improvement Districts can be established to provide bond funding for municipalities where benefiting property owners and utility revenues provide for debt repayment. Other funding options may include grants or a variety of other creative funding methods from property owner credit offsets to voluntary rate payer contributions.

Funding capital costs is a primary constraint in implementing new reclaimed water projects. However, there are many funding mechanisms available. In further development of the reclaimed water distribution system, the City should conduct a detailed project funding study, and pursue all mechanisms possible such as grants to lower project costs.

Conclusions

Feasibility is dependent upon the context and purpose in which a project is being evaluated. For this project, feasibility has been defined based on the ability of specific alternatives to fund the capital construction costs and annual O&M costs with projected revenues from sales of reclaimed water to potential customers over a 20 year period. Each of the six alternatives was

evaluated using this feasibility metric using a 20-year net present worth analysis considering the time value of money.

Customer interviews conducted as part of the Study indicate there is a high level of interest from potential reclaimed water customers in the City. The City is also uniquely placed in close proximity to the County's Brightwater Reclaimed Water System to cost-effectively become a reclaimed water distribution purveyor.

Based on the feasibility definition above, study assumptions and financing terms and conditions, alternatives B and C are feasible. Alternative F is potentially feasible depending upon funding alternatives. Over the 20 year period, the revenues generated from these alternatives with favorable financing terms and conditions will provide for the cost of constructing, maintaining and operating the required reclaimed water distribution systems. These analyses ***do not*** consider lost water utility revenues, the County reclaimed water wholesale rate, the opportunity for funding a portion of the project through grants that would improve the feasibility economics or the useful service life of reclaimed water pipelines that are anticipated to be 50 years or longer.

Alternative B providing reclaimed water service to Area 1 (Bothell and Schnitzer Business Parks) has an estimated capital cost of $2.78M with a range of $1.95M to $4.18M, estimated annual O&M costs of $73,000, annual reclaimed water revenues of $293,000 and a 20-year net present worth (NPW) at 1% and 3.1% interest financing of $1.22M and $0.77M, respectively. Implementation of Alternative B would lower the City's water utility revenues approximately $223,100. Alternative B is feasible and has the highest positive net present value.

Alternative C providing reclaimed water service to Areas 1 and 2 (Bothell and Schnitzer Business Parks and Cascadia/UW-Bothell campus) has an estimated capital cost of $3.54M with a range of $2.48M to $5.31M, estimated annual O&M costs of $79,000, annual reclaimed water revenues of $303,000 and a 20-year NPW at 1% and 3.1% interest financing of $0.67M and $0.09M, respectively. Implementation of Alternative C would lower the City's water utility revenues approximately $232,000. Alternative C is feasible and offers excellent potential for future expansion of the City's reclaimed water system to potential growth in the immediate vicinity associated with the Cascadia/UW-Bothell campus.

While not considered feasible at this time, Alternative F providing reclaimed water service to Areas 1, 2 and 3 (Bothell and Schnitzer Business Parks ,Cascadia/UW-Bothell campus and the downtown revitalization area) has an estimated capital cost of $5.37M with a range of $3.76M to $8.05M, estimated annual O&M costs of $102,000, annual reclaimed water revenues of $340,700 and a 20-year NPW at 1% and 3.1% interest financing of $(0.22M) and $(1.09M), respectively. Alternative F may also provide opportunities in Area 3 (downtown revitalization area) that would bring in outside funding sources from private partnerships and grant opportunities not considered in the feasibility analysis. However, Area 3 is on a shorter term timeline than the other areas; in order to coordinate with the planned private and public construction, the City and County would need to reach an agreement on Alternative F sooner than Alternatives B and C.

Based on the feasibility study evaluations, Alternatives A, D and E are not considered feasible at this time.

Recommendations

It is recommended that City and County staff continue discussions related to Alternatives B and C, which are both feasible based on the specific assumptions of this Study. Alternative F may also be considered if there is interest in expanding reclaimed water use to downtown Bothell, but is not considered feasible without outside funding. The discussions between the parties should include wholesale and retail rate setting, capital funding options and other financial considerations. Ultimately, the feasibility calculations may need to be updated as assumptions are refined, water utility revenue losses are considered and the wholesale reclaimed water rate charged by the County is determined in negotiations with the City. These updates would then help inform the negotiations between the two parties and assure the revenues and expenses for a specific alternative selected for implementation are sustainable.

Since, all of the potential customers in the interview process were interested in using reclaimed water if it was economically feasible for their operations, it is recommended the City and County develop a communication plan to continue building support for the program and to keep potential customers engaged in the development process. For example, the customers asked for additional information on reclaimed water quality and quantity. In addition, reclaimed water rates based on the water demand projections and capital cost estimates should be investigated with customers to determine if the water rates will meet the potential customers' expectations communicated in the outreach interviews. Implementation of a communication plan is critically important to ensure information and momentum is not lost as the City and County move forward in their development of a reclaimed water program.

The City and County should continue to search for additional potential customers. Many future customers and demands exist that were not readily identified in this project. Further contact and interviews should be conducted to establish relationships with these potential future customers. A marketing campaign to attract new businesses with large water needs to the City could also be considered. Additional revenue from new water demands will increase the feasibility of the system economically.

From a constructability standpoint, there are several creek crossings and the I-405 freeway crossing that will need some additional investigation and, ultimately, permitting if the project is to proceed. It is recommended the City begin discussions with Washington State Department of Transportation (WSDOT) and other agencies at such a time that a specific alternative is proposed for implementation, likely beginning with a more detailed follow-up investigation to develop the construction details that will be required prior to consultation.

Section 1: Background

1.1 Introduction

The City of Bothell (City) and King County Department of Natural Resources, Wastewater Treatment Division (County) jointly funded this reclaimed water feasibility study to investigate options for using reclaimed water in the City. The Memorandum of Agreement (MOA) between the City and County signed in June 2010 to fund the feasibility study comes after nearly ten (10) years of discussion between the City, County and potential reclaimed water customers in the City.

The study reviews opportunities in the City for distribution and use of Washington Class A reclaimed water produced at the County's Brightwater Treatment Plant. Potential uses investigated include landscape irrigation, agricultural irrigation of turf and certain crops and other allowable commercial and industrial uses.

When complete, it is anticipated the City of Bothell Reclaimed Water Feasibility Study (Study) will serve as the foundation for discussions between the City and County about potential opportunities for the City to construct the necessary reclaimed water distribution facilities as retailer of water provided by the County as a wholesaler.

1.2 Agency Responsibilities and Interests

King County provides regional wastewater services in the City through long-term contracts. Under these contracts, the County must provide adequate facilities to intercept, transport, treat and discharge wastewater in a manner prescribed by local, state and federal regulations. A component of the County's wastewater mission is to reclaim and beneficially reuse wastewater products such as reclaimed water and biosolids. In addition, reducing reliance on the Puget Sound for effluent disposal is of primary importance in the region.

The City of Bothell supplies drinking water within its designated geographic boundaries directly and to others through contracts with local water districts. Long term water supply projections indicate the City has adequate contracts to meet the City's drinking water demands for the foreseeable future. However, there appears to be interest from customers in the City to obtain Class A Reclaimed Water from the County's for uses landscape irrigation, commercial and industrial uses, wetland enhancement and other allowable uses. The City is interested in sustainability and economic development opportunities to promote growth and an environmental ethic in the City.

1.3 History

In 2005, after several years of negotiation, the City and County entered into a MOA regarding Mitigation for the Brightwater Project. The MOA committed the two entities to collaborate on opportunities for using reclaimed water from Brightwater in the City. During this time, the City updated its comprehensive plan to investigate the feasibility of using reclaimed water produced at the Brightwater facility if found to be cost-effective.

In addition to the MOA, between 2003 and 2010 the City and County have had ongoing discussions with potential reclaimed water customers in the City, including the University of

Washington, Cascadia Community College, Seattle Times, and Bothell Business Park to discuss possible uses of reclaimed water.

The 2005 MOA and the ongoing discussions with potential reclaimed water customers resulted in the 2010 MOA between the City and County to conduct the Study and hired a consultant to complete the work.

1.4 Purpose and Scope of Study

The purpose of the Study is to explore the feasibility of the City developing and operating reclaimed water distribution facilities inside the City limits using water delivered from the Brightwater Treatment Plant by the County. The scope of the study is to identify potential reclaimed water users, estimate seasonal reclaimed water demands, develop preliminary reclaimed water distribution alignments, estimate capital, operations and maintenance costs over a 20-year lifecycle, identify potential funding sources and compile the study along with conclusions, recommendations and next steps into a final written report. Once complete, the final report would then be used as a basis for negotiations between the City and County to determine the level of interest of the City retailing reclaimed water in the City limits supplied by the County as wholesaler.

The geographic scope of the study is shown on Exhibit A and is within the City's water service area. The study area is divided into four locations: 1) The Bothell Business Park and Seattle Times; 2) Schnitzer North Creek Business Park; 3) University of Washington and Cascadia Community College campuses; and, 4) Downtown Bothell. These study locations were selected for several reasons.

1. All four locations have potential customers interested in using reclaimed water, some of which have expressed a long standing interest in using reclaimed water.
2. The Bothell Business Park, Seattle Times and the Schnitzer North Creek Business Park were selected for their proximity to the Brightwater South Backbone which coveys Class A Reclaimed Water through the Bothell Business Park.
3. In the past, the University of Washington and Cascadia campuses have expressed an interest in using reclaimed water for their existing campus and building expansions that could provide for such uses as toilet flushing, landscape irrigation, water features and cooling towers.
4. The downtown area is undergoing a major revitalization and is being considered for a community utility district for energy purposes. The Mayor and City Council specifically asked the utility, during approval of the MOA, to study using reclaimed water in the downtown revitalization and as an incentive for economic development in a green city.

1.5 Feasibility Study Design

The Study scope was designed to follow a series of sequential steps that would culminate in a determination if reclaimed water distribution of water provided by the County is feasible in the City, while also informing future discussions between the City and County related to next steps summarized after the conclusions and recommendations. The sequential steps following in completing the study were as follows:

1. A kickoff meeting was conducted with attendees from the City, County and Kennedy/Jenks Consultants (Kennedy/Jenks) where the goals and objectives of the Study were discussed and assumptions summarized in Section 2 were developed.
2. The City and County jointly identified potential reclaimed water customers that were then interviewed by Kennedy/Jenks to identify their potential reclaimed water demand, level of interest, concerns and willingness to pay for reclaimed water. These interviews were summarized in a report included in Appendix C.
3. Using information from the customer interviews and water demands provided by the City, a total of six alternatives were developed for detailed evaluation. Each alternative included the development of a distribution system to serve the reclaimed water demands as well as costs for installing a new reclaimed water meter and an allowance for connection of the service on the private side of the new meter. A distribution system model was developed by Kennedy/Jenks for each of the six alternatives to evaluate system pressure and water age related to an assessment of chlorine residual requirements.
4. Once the alternatives and alignments were conceptually agreed upon by the City and County, initial capital costs and a 20-year net present worth lifecycle cost (20-year Lifecycle Cost) including operations and maintenance was developed for each.
5. Finally, a preliminary feasibility analysis was then developed for each alternative using the 20-year Lifecycle Costs to determine which of the alternatives is fiscally sustainable.
6. The results of the feasibility study were then summarized with the development of conclusions, recommendations and next steps to address certain questions that were outside the scope of the Study.

1.6 County Reclaimed Water System Overview

Reclaimed water would be provided to the City from the Brightwater Treatment Plant, located northeast of the City, which produces Class A Reclaimed Water that can be used for a wide variety of uses. These include landscape irrigation, agricultural irrigation of turf and some crops, cooling water supply, toilet flushing and other commercial and industrial uses. Exhibit A on page 1-5 presents the main components of the Brightwater Reclaimed Water System. A 30-inch reclaimed water pipeline delivers the Class A reclaimed water from Brightwater to the Influent Pump Station in the Bothell Business Park. The pipeline serves a dual purpose of delivering reclaimed water to customers and as a chlorine contact chamber providing disinfection to Washington Class A standards. The chlorine residual in the pipeline at the Influent Pump Station will be high enough to provide the necessary residual in the City's potential reclaimed water system.

At the Influent Pump Station, the County's reclaimed water distribution system splits into two branches, one continuing westward toward Kenmore through the central tunnel (West Backbone) and one branch heading south to the North Creek Pump Station and to the Sammamish Valley (South Backbone).

Reclaimed water from the Brightwater Treatment Plant flows by gravity to the Influent Pump Station, North Creek Pump Station, York Pump Station and further south into the Sammamish Valley to serve additional reclaimed water customers. Drawings and schematics of the reclaimed water distribution system located near North Creek Pump Station are included in Appendix A.

1.6.1 County Reclaimed Water Permit

The Brightwater Reclaimed Water System is currently regulated under reclaimed water permit #ST0045498 issued by Washington State Department of Ecology (DOE) and Department of Health (DOH). The permit, issued in 2010, outlines the water quality limits, reliability and other requirements for the County to produce and distribute Class A Reclaimed Water to customers from the Brightwater Treatment Plant. The permit is also required to be renewed every five years. A copy of the Brightwater Reclaimed Water System permit is included in Appendix B.

1.6.1.1 Chlorine Residual Maintenance

Due to the level of advanced wastewater treatment at the Brightwater Treatment Plant, which is a membrane bioreactor (MBR), the key issue for maintaining the Class A reclaimed water in distribution systems is the maintenance of the required chlorine residual. The County must maintain a minimum chlorine residual of 0.5 milligram per liter (mg/L) at every point in the County reclaimed water distribution system.

In order to maintain the minimum chlorine residual in the South Backbone, the County has several chlorine monitoring and dosing points. To meet the chlorine residual requirements, chlorine residual is monitored at the Influent Pump Station, York Pump Station and North Creek Pump Station to facilitate additional chemical dosing at the Influent Pump Station and York Pump Station to maintain the 0.5 mg/L minimum chlorine residual required in the County's reclaimed water permit.

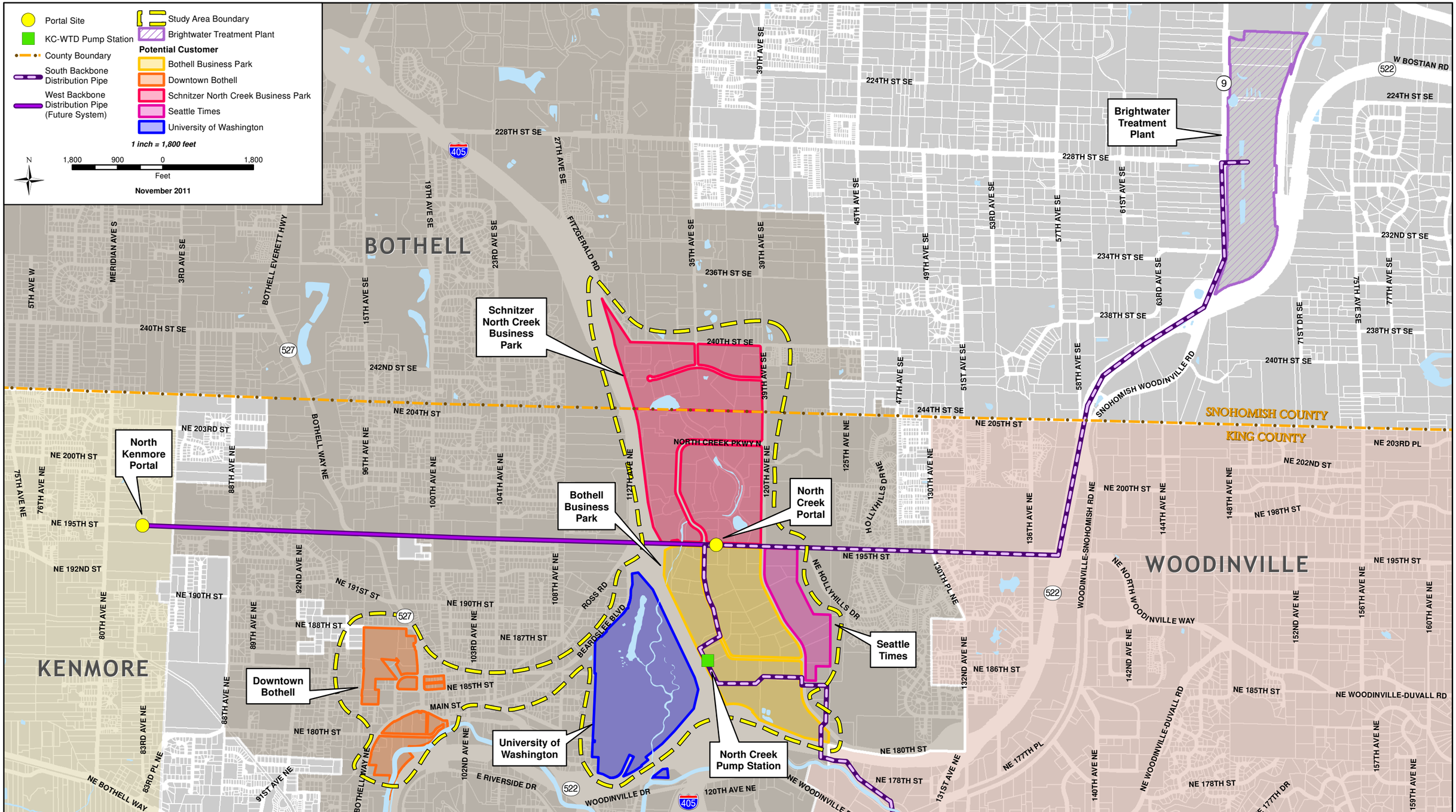

King County
Department of
Natural Resources and Parks
Wastewater Treatment Division

The information included on this map has been compiled from a variety of sources and is subject to change without notice. King County makes no representations or warranties, express or implied, as to accuracy, completeness, timeliness, or rights to the use of such information. This document is not intended for use as a survey product. King County shall not be liable for any general, special, indirect, incidental, or consequential damages including, but not limited to, lost revenues or lost profits resulting from the use or misuse of the information contained on this map. Any sale of this map or information on this map is prohibited except by written permission of King County.

File Name: Q:\\WTD\Projects\BW_Reuse\Projects\bothell_sites.mxd - Shari Cross

Exhibit A: Study Area and Potential RW Customers

Bothell Reclaimed Water Feasibility Study

Section 2: Basis of Planning

This section is provided as reference to catalog the methodologies, guidelines, references and assumptions used in the development of this feasibility study. The basis of planning summarizes the following:

- Study Area Boundary (Exhibit A)
- Customer Water Demand Estimates
- Reclaimed Water System Design Criteria
- Basis of Cost Estimates
- Basis for Project Feasibility Determination

2.1 Study Area Boundary

The distribution service boundary of the Bothell reclaimed water system was established based on the proximity to the North Creek Pump Station and the Bothell City limits. The study area was limited to the Bothell and Schnitzer business parks, utility water, and downtown revitalization due to the potentially large reclaimed water demands of these areas as well as the proximity of these areas to the County reclaimed water South Backbone.

2.2 Customer Water Demand Estimates

When available, potential customers' historical water use data was obtained and inputted for demand estimates in lieu of calculations. In cases where existing water use data was not available, the following demand estimate methods were used.

2.2.1 Irrigation Demand Estimates

The basis for irrigation rates was established using agronomic irrigation rates from the Washington Irrigation Guide and Western Regional Climate Center (WRCC) precipitation records.

- Precipitation data was collected from the WRCC Everett Station for years 1998-2008
- Crop evapotranspiration rates (also referred to as crop consumptive use) were obtained from the Washington Irrigation guide, Appendix B – Washington State West of the Cascades for Pasture Turf.
- An irrigation season of April through September was used based on agronomic irrigation rates.

Table 2.1 presents the monthly water balance that was used for the agronomic irrigation rates described above.

Table 2.1: Pasture and Turf Agronomic Irrigation Rates

Month	Precipitation (inches)[a]	Et crop (inches)[b]	Net Irrigation (inches)[c]
Jan	4.1	0.00	0.0
Feb	2.7	0.20	0.0
Mar	3.1	1.43	0.0
Apr	2.3	2.60	0.3
May	2.2	3.83	1.7
Jun	1.8	4.43	2.6
Jul	0.9	5.26	4.3
Aug	1.0	4.19	3.2
Sep	1.3	2.89	1.6
Oct	3.0	1.32	0.0
Nov	5.1	0.36	0.0
Dec	4.7	0.08	0.00
TOTAL	**32**	**27**	**13.66**

Notes

a Precipitation from WRCC Everett Station 1998-2008
b Crop evapotranspiration (also referred to as Crop Consumptive Use) from Washington Irrigation Guide, Appendix B - Washington State West of the Cascades, Everett, WA of Pasture/Turf
c Net irrigation divided by irrigation efficiency equals gross irrigation.

2.2.2 Commercial and Domestic Water Use Estimates

The following methods were used to estimate water used for toilet flushing and decorative fountains for commercial and domestic water demands.

Toilet Flushing

- Toilet flushing for restaurants and bars were calculated based on the number of customers. It was assumed customers used the restroom twice and used 1.6 gallons per flush each time as required by the Energy Policy Act of 1992.
- Toilet flushing was assumed to use 9.3 gallons per day per capita (gal/d-cap) for occupied units of hotels and apartments as taken from Metcalf and Eddy, Fourth Edition.

Decorative Fountains

- The basis for decorative fountains was established using pan evaporation rates and precipitation data from the WRCC.
- A total evaporation rate of 11.68 inches/year was used to determine replacement water demand for fountains.

2.3 Reclaimed Water System Design Criteria

Bases for sizing and components of the reclaimed water system were taken from input from the County, customer feedback, City standards, DOE and DOH standards and generally accepted engineering principles. The design criteria are summarized below in Table 2.2.

Table 2.2: Reclaimed Water System Design Criteria

System Component	Design Criteria
Pipe Velocity	• Velocities were kept low to minimize head loss within the system. By keeping velocities low, there is also built in capacity for future connections and flows not currently anticipated or documented. The low velocities also allow for peaking during summer irrigation to have minimal impact on operating pressures in the system. • Maximum pipeline velocities should not exceed 8 feet per second.
System Pressures	• Based on discussions with potential customers, system pressures of 60 to 100 psi are required for proper function of irrigation systems. A booster pump station will be added to provide system pressures equivalent to the pressures in the City's existing drinking water system to assure there are no issues with irrigation system sizing and coverage. • At least 10 psi should be maintained in the system in accordance with the Washington State Orange Book. • Looping of distribution pipes was included to provide greater service connection pressure and flow reliability.
Pipe Type	• Pipeline will be C900 PVC. • Pipeline will be purple to indicate reclaimed water in accordance with the Washington State Orange Book.
Water Quality	• Water quality within the distribution system shall meet the Brightwater Reclaimed Water System permit as outlined in Appendix B. • A chlorine residual of 0.5 mg/L shall be maintained throughout the distribution system.
Pipe Roughness	• Hazen-Williams Roughness Coefficient of 140 to simulate PVC pipe in service after 5 to 10 years.
Meter Sizing	• The basis for sizing the meters involved corresponding the potential customers' demand flows with the appropriate meter size as dictated in the Customer Metering Technical Memorandum and Specification completed by Kennedy/Jenks for the County in 2011 included in Appendix D.
Pipeline Separation	• All reclaimed water service lines and meters must be separated by a minimum of 10 feet horizontally from the nearest potable water facility, including pipelines, meters, and hydrants, unless otherwise approved by DOE and DOH. • A minimum vertical separation of 18 inches shall be maintained between reclaimed water lines and potable water lines unless otherwise approved by DOE and DOH. • When a reclaimed water main is adjacent to or crosses a sanitary sewer line, the reclaimed water main shall be considered a potable water main and comply with the above regulations for horizontal and vertical separation.
Other	• All reclaimed water valves, outlets and other appurtenances shall be designed or secured in such a manner that permits operation only by authorized personnel. • Hose bibs on reclaimed water are prohibited unless specifically authorized by DOE and DOH. • All reclaimed water connections must be equipped with a pressure-regulating valve and the valve must be installed in an underground box or boxes.

Abbreviations
DOE – Department of Ecology
DOH – Department of Health
psi = pounds per square inch
PVC = polyvinyl chloride

2.4 Basis of Cost Estimates

All cost estimates prepared as a part of this evaluation are order-of magnitude or conceptual cost estimates as defined by the American Association of Cost Engineers (AACE). An order of magnitude estimate is one that is made without detailed engineering data, and uses techniques such as cost curves and scaling factors for similar projects. The overall expected level of accuracy of the cost estimates presented is +50 percent (%) to -30%, meaning that bids can be expected to fall within a range of 50% over the estimate to 30% under the estimate for each project. This is consistent with the guidelines established by the AACE for planning level studies.

2.4.1 Capital Costs

Capital costs are those costs associated with constructing facilities and appurtenances required for each alternative and may include pumping facilities, pipeline distribution system, metering facilities, and private side connections. No property acquisition cost was included because the booster station could be located on City-owned property.

The cost estimates in this report are based on RS Means construction cost data for materials and prices in the Seattle, Washington area, recent project cost estimates, and the Engineer's experience on similar projects. Quotes for C900 DR 18 purple polyvinyl chloride (PVC) pipe were obtained on 26 March 2012 from Fergusson in Woodinville, Washington. The estimates represent Kennedy/Jenks' professional opinion of costs on a conceptual basis and are current at Engineering News Record (ENR) of 9044.65 for Seattle, Washington in February of 2012.

Standard markups applied to conceptual construction cost estimates are summarized in Table 2.3. Cost estimates prepared for alternative evaluations are included in Appendix E for reference.

Table 2.3: Applied Mark-ups for Conceptual Level Cost Estimates

Item	Markup as Percent of Construction Cost
General Conditions (incl. Bonds, Mobilization)	7%
Contractor's Overhead and Profit	12%
Taxes	9.5%
Estimate & Construction Contingency	35%
Engineering/Legal/Administrative	30%

2.4.2 Lifecycle Costs

The overall life-cycle cost of an alternative, includes capital costs for construction of facilities, and operations and maintenance costs over a 20-year useful life.

Operations and Maintenance (O&M) costs are the estimated annual costs for City staff to operate and maintain the proposed facilities, energy costs to run proposed pumping facilities and other costs such as administrative costs that may be required. O&M Costs are based on a Net Present Worth (NPW) of capital improvement cost and annual O&M costs. NPW alternative costs are based on:

- Labor Rate: $75/hour
- Energy Rate: $0.091386/kilowatt-hour (kWh) for October-March and $0.088288/kWh for April-September
- Monthly Energy Charge: $24.55 for three phase power
- Discount Rate: 3%
- Evaluation Period: 20 years
- Residual Value: $0

2.4.3 Project Financing

Although many methods of financing exist from loans, grants, general obligation bonds, and other sources, for purposes of this study, it is assumed that the Bothell Reclaimed Water Distribution System will be financed via low interest loans. The two most likely loans for this purpose are the State Water Pollution Control Revolving Fund Loan Program (SRF) or the Public Works Trust Fund Loan Program (PWTF). Terms of financing calculations are based on the following assumptions:

- Payment Term of 20 Years
- Interest Rate of 1% for PWTF loan
- Interest Rate of 3.1% for SRF loan

2.5 Methodology for Project Feasibility Determination

Feasibility is dependent upon the context and purpose in which a project is being evaluated. For this project, it was agreed by the City and County that feasibility would be defined as the ability of a specific alternative to fund the capital construction costs and annual O&M costs with projected reclaimed water sales revenues over a 20-year period. Each of the six alternatives was evaluated using this feasibility metric using a 20-year NPW analysis considering the time value of money.

The determination of feasibility for each of the six reclaimed water alternatives is a positive 20-year NPW. In other words, the reclaimed water revenues estimated from potential customers over a 20 year period is greater than the costs incurred in financing the capital expenditures and operating the reclaimed water system over the same period.

The methodology for the feasibility determination is the following:

1. Develop list of potential reclaimed water customers and estimate potential reclaimed water demands and revenues.

2. Develop preliminary distribution system for serving potential reclaimed water customers.

3. Estimate capital cost estimate and operating cost estimate for distribution system.

4. Estimate annual operating expenses based on typical loan financing.

5. Estimate annual payments for typical loan rates for the capital cost estimate.

6. Estimate 20-year NPW of capital costs, debt repayment, O&M expenses and customer revenues (reclaimed water sales).

7. Determine feasibility through following equations:

   Project is Feasible (Positive):
   20-year NPW revenues – 20-year NPW costs > Zero

   Project is not Feasible (Negative):
   20-year NPW revenues – 20-year NPW costs < Zero

Section 3: Potential Reclaimed Water Customers and Estimated Demands

The first step in the study was to determine potential customers within the study area, and their associated water demands. This section:

- Presents a Customer Interview Summary
- Lists potential reclaimed water customers
- Sorts the customers by area
- Calculates potential water demands
- Summarizes customer connection requirements
- Provides a list of potential future customers

3.1 Potential Customer Interview Summary

Interviews were conducted among thirty-one people representing eighteen organizations identified by the City and County as potential reclaimed water customers. Some of the potential reclaimed water points of use were represented by multiple organizations. Data Instincts and Kennedy/Jenks conducted the interviews on 7-9 November 2011 in the Bothell area at potential customers' places of business. The interviews sought to determine the respondents' interest in switching to the use of reclaimed water, price expectations, concerns and attitudes and to identify potential opportunities or barriers for the project.

The In-depth Interview technique (IDI) was employed for the customer outreach effort. This investigative technique uses a one-on-one or small group approach for information gathering, which allows for a free and open exchange. Because of the study sample size and recruitment techniques employed, it should be understood that while the IDI technique seeks to develop deeper insights into and understanding of the people and issues involved with the reclaimed water program, the findings are not scientific or statistically applicable to a larger population.

The IDI process has been used by Data Instincts to address reclaimed water issues throughout California. Data Instincts conducted their first IDI process in Washington State for the County to assess the potential reclaimed water demand in the Sammamish River Valley which will also be served by the Brightwater Reclaimed Water System.

The County made the first contact with all interviewees and organized the interview times and places for the scheduled three days for the interviews to take place. The full report summarizing customer outreach interviews written by Data Instincts is included in Appendix C.

3.1.1 Additional Potential Customer Outreach

Based on input from the City at the 21 February 2012 infrastructure review workshop, additional outreach was performed to identify other potential water demand. Several new contacts were made and a few contacts from the first interviews were contacted again. The additional contacts were as follows:

- **University of Washington-Bothell:** Kennedy/Jenks spoke with the Vice Chancellor concerning potential water demands in the 2010 Master Plan for the campus. The new science building on Beardslee Boulevard (Blvd), the Husky Village and the new sports fields were discussed as potential uses. None of these sites will use reclaimed water due to the fact that they are already constructed and that the sports fields will be artificial turf. The facilities manager was also contacted again to assess the potential for water demand in the campus cooling towers. At this time, there is no usage information for the cooling towers. While no other potential demand could be quantified for this current study, there is a very large potential demand on the campus due to the planned campus expansion and potential use in the cooling towers.

- **Gateway Apartments:** Kennedy/Jenks made multiple attempts by both phone and e-mail to contact a representative about the future Gateway Apartments on Beardslee Blvd, but received no response. The Gateway Apartment may still be a potential demand before the building goes into construction.

- **Dick Paylor Office Building:** Kennedy/Jenks spoke with Dick Paylor from NAI Puget Sound Properties about potential sites for reclaimed water usage. NAI is not currently developing any properties along Beardslee Blvd. that would potentially use reclaimed water.

- **Lynn Trust Property:** Kennedy/Jenks made multiple attempts by phone to contact a representative about the Lynn Trust Property on Beardslee Blvd, but received no response. The Lynn Trust Property may still be a potential demand depending on the planned development for the site.

- **Bothell Landing:** Potential reclaimed water demand for irrigation was quantified based on information contained in the master plan for the riverfront park. The plan dictated that the creek and wetland area on the west side of the park will be not be irrigated after plant establishment and were not included in the potential irrigation demand.

3.2 Potential Bothell Reclaimed Water Customers

Interviews were conducted with the following organizations throughout the four areas identified within the study boundaries:

- AT&T
- Schnitzer Business Park
- Bothell Business Park
- Seattle Times
- City of Bothell
- University of Washington Bothell
- Cascadia Community College
- Village Center Senior Housing
- Weidner Apartments
- McMenamins
- CamWest Development
- MacDonald-Miller Facility Solutions

- General Dynamics
- T-Mobile
- MOHR Partners
- Northwest Naturals
- Washington Complete Construction
- Waterside Asset Management

All interviewees were potentially interested in using reclaimed water for a variety of uses including landscape irrigation, cooling towers, decorative fountains, sewer cleaning, toilet flushing and others. Exhibit B shows the potential reclaimed water customers included in the distribution system planning. Fifteen different potential customer connections are included and listed below, based on location. Table 3.1 summarizes the results of the customer interviews.

Table 3.1: Potential Customer Interview Summary

Interview Questions	Most Common Response
Primary reason to switch?	• Being Green/environmentally friendly • Want switch to be Public Knowledge
Greatest Concern?	• Price of Water • Cost of infrastructure to switch
Thoughts on Cost?	• 70% of potable water cost
Other Concerns?	• Public perception of health and safety • Water Quality • Access to information for their customers

3.2.1.1 Bothell Business Park Area and Seattle Times

The Bothell Business Park and Seattle Times area has four potential connections. These potential connections include the Bothell Business Park for landscape irrigation, the Seattle Times for landscape irrigation, a decorative fountain and cooling towers, the Bothell playfields for landscape irrigation and a fill station for trucks utilizing the water for sewer cleaning.

3.2.1.2 Schnitzer Business Park Area

Two potential connections are in the Schnitzer Business park area. These connections are the Schnitzer business park for landscape irrigation and AT&T for cooling tower usage.

3.2.1.3 University of Washington-Bothell/Cascadia Community College Campus Area

Only one potential connection to the campus exists in this area but would potentially be utilized for toilet flushing, irrigation and cooling towers.

3.2.1.4 Downtown Revitalization Area

The Downtown Revitalization area contains eight potential connections. CamWest Lots O and K, the Weidner Apartments and the senior housing are all new residential developments that would potentially use the water for toilet flushing, decorative fountains and landscape irrigation. The new Bothell City Hall would use the water for landscape irrigation, decorative fountains and potentially toilet flushing. The new McMenamins location would use the water for toilet flushing

and landscape irrigation for all the restaurants, bars, hotel and grounds. The park at Bothell Landing would use the water for irrigation. The Bothell Community Utility District would use the water to make-up water lost in the heating and cooling energy loop.

3.2.2 Potential Customer Area Groupings

The potential reclaimed water customers were separated into four areas to allow for geographic groupings according to potential reclaimed water service.

- **Area 1A** - Bothell Business Park Area and the Seattle Times only.
- **Area 1** - Bothell and Schnitzer Business Park Areas and the Seattle times.
- **Area 2** – University of Washington-Bothell and Cascadia College along with other potential uses across Interstate-405 (I-405) between the business parks and downtown Bothell.
- **Area 3** –Downtown Bothell revitalization area.

3.3 Potential Reclaimed Water Demands

Table 3.2 presents the potential customer reclaimed water demands with the associated areas. The system demands consist of two categories correlating to year-round demands and summer demands. The system demands are defined as follows:

- **Non-irrigation Demands** These demands consist of year-round demands that are observed consistently throughout the year, regardless of season or precipitation.
- **Irrigation Demand** These demands consist of the additional flow observed in the summer irrigation months (April – September).

The irrigation demands may fluctuate annually due to differences in precipitation observed each year and are the cause for seasonal peaking in the reclaimed water system. The total demand in the summer is the sum of the non-irrigation demand and the irrigation demand.

Consistent water demands used for toilet flushing and cooling tower usage are referred to as non-irrigation demand. Water demands that are only needed during the summer months are referred to as irrigation demand.

As Table 3.2 demonstrates, the greatest water demands are in Areas 1A and 1 for the two business parks and Seattle Times. Area 2 shows low current demands, but discussions with the City indicate this area could have a larger demand in the future with planned developments.

Table 3.2: City of Bothell Potential Reclaimed Water Customers and Estimated Demands [a]

Potential Customer	Area	Non-Irrigation Demand (CCF/yr)	Irrigation Demand (April - September) (CCF/Season)	Non-Irrigation Demand (gpd)	Irrigation Demand (April - September) (gpd)	Anticipated Meter Size
AT&T	1	44,157	6,100	90,500	24,940	2”
Schnitzer Business Park	1	0	21,407	0	87,500	2”
Bothell Business Park	1, 1A	0	9,800	0	40,060	2”
City of Bothell Playfields	1, 1A	0	1,736	0	7,100	1 ½”
Seattle Times	1, 1A	4,397	5,519	9,020	22,560	2”
Fill Station	1, 1A	3,029	0	6,210	0	N/A
UWB/CCC	2	0	2,599	0	10,630	1 ½”
City of Bothell City Hall	3	0	96	0	400	½”
City of Bothell River Front	3	0	1,446	0	5,910	1 ½”
Senior Housing	3	1,293	50	2,660	160	1 ½”
Weidner Apartments	3	1,815	50	3,720	210	1 ½”
McMenamins	3	1,480	852	3,040	3,490	1 ½”
CamWest Development - Lot O	3	1,044	744	2,140	3,050	1 ½”
CamWest Development - Lot K	3	454	50	930	160	1”
Bothell CUD	3	0.14	0	10	0	½”
	Total:	**57,670**	**50,450**	**118,230**	**206,170**	
			Total (MGD):	**0.12**	**0.21**	
				Total Demand (MGD):	**0. 32**	

Abbreviations:

CCF = Hundred Cubic Feet
gpd = gallons per day
MGD = millions gallons per day

Notes:

a Data sources include water records, master planning documents, agronomic irrigation rates, and anticipated housing units and estimations.

Area 3 in the downtown revitalization area has moderate demands. The flow is expected to double in all areas during the summer with the additional irrigation demand.

3.4 Reclaimed Water Customer Connection Requirements

The potential reclaimed water customers will be using the water for a variety of uses including irrigation and industrial applications and, therefore, have specific requirements for system pressure and water quality summarized in the following sections.

3.4.1 Pressure Requirements

In order to assure minimal impact on existing irrigation systems for potential reclaimed water customers, the design of the reclaimed water system should attempt to match the existing water system pressures currently observed in the City's drinking water system. Table 3.3 shows the existing water system pressures by potential customer area.

Table 3.3: Existing Bothell Drinking Water Distribution System by Location

Potential Customer Area	Existing Water System Pressure (psi)[(a)]
Business Parks	110-115
Campuses	85-90
Downtown Bothell	80-85

Notes:

a Pressure estimates from interview of City of Bothell water system operations personnel.

According to the City's water operations personnel, customers typically install a PRV downstream of the irrigation meter for uses inside of buildings. Irrigation connections are typically left on the higher system pressure.

3.4.2 Water Quality Requirements

The County will deliver Class A reclaimed water to the City with adequate chlorine residual to maintain 0.5 mg/L at all points in the City's reclaimed water distribution system. Therefore, it is not anticipated that the City will be required to provide chemical dosing facilities to increase the chlorine residual downstream of the connection to the County reclaimed water system.

Other water quality requirements noted in the potential customer interviews, including alkalinity and silica concentration, should be addressed with customers on a case-by-case basis. It is not anticipated that the water produced at the Brightwater MBR Treatment Plant would have any issues with the specific water quality requirements for potential City customers, but specific investigation was outside the scope of this Study.

3.5 Potential Future Customer Demands

There are many other potential reclaimed water customers and demands within all four locations for reclaimed water distribution.

- As noted in Section 3.1.1, **the University of Washington**, is planning a large future expansion of their Bothell campus. The number of buildings on campus will ultimately

double in size with 1,500 additional student housing units and 500,000 square feet of academic space all with the potential of using reclaimed water for irrigation, toilet flushing and cooling towers.

- **New developments along Beardslee Boulevard** such as apartment building and office spaces could potentially use reclaimed water for irrigation and toilet flushing.
- **Other facilities in the business parks** may connect to the system for industrial or toilet flushing needs.
- **Unidentified customers in the downtown revitalization area** will arise as the development continues into the future. Once initial customers are connected and satisfied with the reclaimed water provided, demand in the area will likely increase.

Section 4: Preliminary Reclaimed Water Distribution System

Potential reclaimed water customers were introduced in the previous section and summarized in Table 3.2. The next step in the feasibility study was to investigate requirements for connecting to the King County reclaimed water distribution system and to develop a system to serve potential customers identified in the Bothell study area.

The following section presents:

- Bothell connection to the King Country South Segment reclaimed water system
- Hydraulic modeling
- Six potential distribution system alternatives
- Booster Pump Station Requirements
- Chorine Residual Maintenance
- I-405 bridge crossing considerations.

4.1 King County Reclaimed Water System Point of Connection

The 30-inch King County Reclaimed Water South Backbone distribution pipe can be accessed along North Creek Parkway and NE 195th Street in the Business Parks. Specific requirements at the point of connection are summarized in Sections 4.4 and 4.5.

4.2 Hydraulic Modeling

Hydraulic modeling was performed using EPANET, a free software program developed by the United States Environmental Protection Agency.

- Demands were input into the system as nodes corresponding to the anticipated connection points from the potential reclaimed water customers.
- Other non-demand nodes were added to act as places to connect pipes to loops and North Creek to the distribution system.
- Elevation data for each node was estimated using a United States Geologic Survey topographic map.
- Pipes were added to connect nodes and lengths of pipe were scaled off of Exhibit A.
- A reservoir was added to simulate the distribution pipe point of connection with a head of 190 feet to correspond to the 65 pounds per square inch (psi) expected at the connection.

4.2.1 Model Run Summary

EPANET was run statically to determine two conditions:

- **Condition 1: System Headloss** – the greatest headloss in the distribution system at peak flows to determine pipeline sizing, velocity and pressure.

- **Condition 2: Water Age to Determine Chlorine Decay** – the longest residence time of the water in the distribution system used to investigate chlorine residual requirements in the Bothell reclaimed water distribution system.

Condition 1 used the total of the non-irrigation and irrigation flows from Table 3.2 to calculate the greatest headloss in the system. Though adjusting distribution pipe sizes to minimize headloss and calculate pressure of water delivered to the potential customers, the preliminary distribution system was developed.

For condition 2, water age and demands at each node were used corresponding to the non-irrigation flow from Table 3.2. This flow condition was used to determine the water age used for the chlorine residual analysis to ascertain whether additional chlorine dosage would be necessary within the Bothell reclaimed water distribution system.

4.3 Preliminary Reclaimed Water System Alignment

Six different distribution system alternatives were modeled in order to provide service to different combinations of customers. These alternatives were selected based upon different levels of capital investment in infrastructure to provide reclaimed water to a few customers closest to the North Creek Fill Station to developing a system that would provide reclaimed water to all listed customers.

These alternatives include:

- **Alternative A** – Distribution system connected to Bothell Business Park, Bothell Playfields, North Creek Fill Station and Seattle times, only.
- **Alternative B** – Distribution system connected to Bothell and Schnitzer Business Parks, Bothell Playfields, North Creek Fill Station, Seattle Times and AT&T.
- **Alternative C** – Distribution system connected to all areas described in Alternative B and University of Washington Bothell/Cascadia Community College.
- **Alternative D** – Distribution system connected to all areas described in Alternative 2 and the Downtown revitalization area, but not UW.
- **Alternative E** – Distribution system connected directly to Downtown revitalization area, only.
- **Alternative F** – Distribution system connected to all potential customers including Bothell Business Park, Bothell Playfields, North Creek Fill Station, Seattle times, University of Washington-Bothell/Cascadia Community College, Schnitzer Business Park and Downtown revitalization area.

Exhibit C presents the preliminary alignment of the distribution systems, where the six alternatives serve different combinations of Areas 1, 1A, 2 and 3. Exhibit C also presents potential customer demands and locations as well as the booster pump station and point of connection location.

Table 4.1 summarizes the alternatives and the areas served under each. The table also shows the lineal feet of pipe in each alternative.

Table 4.1: City of Bothell Potential Reclaimed Water System Alignment

		Lineal Feet of Pipe			
Alternative	**Area(s) Served**	**4-inch**	**6-inch**	**8-inch**	**Comments**
A	1A	0	4,900	2,450	Bothell BP & Seattle Times only
B	1	0	9,880	2,450	Bothell/Schnitzer BP & Seattle times
C	1 & 2	0	12,580	2,450	Bothell/Schnitzer BP, Seattle times & UW
D	1 & 3	5,850	17,080	2,450	Bothell/Schnitzer BP & Seattle times & Downtown
E	3	5,850	7,200	2,450	Downtown only
F	1, 2 & 3	5,850	17,080	2,450	All potential customers

The distribution systems corresponding to each area do not change in each alternative. The only change in distribution systems is in alternative A where a 6-inch pipe is added across 195th to provide looping in the system because the northern connecting loop in the Schnitzer Business Park does not exist in Area 1A.

- The distribution system for Area 1 consists of a 6-inch loop with an 8-inch main running north from North Creek.
- The distribution system for Area 2 consists of a 6–inch pipe crossing I-405 and running to the UW campus.
- The distribution system for Area 3 consists of a 4-inch loop connected with a 6-inch main coming from the UW campus.
- System pressure ranged from 54 psi to 65 psi throughout the system for the summer irrigation flow scenario with 54 psi being observed at the farthest connection from the business parks.
- System pressures only change by approximately 2 psi depending on the alternative.
- Velocities within the system range from 0.1 to 2.3 feet per second (fps). Most velocities were below 1 fps with larger velocities observed in larger transmission pipes closer to the connection at North Creek. Velocities during peak flows remained considerably under the limit of 8 fps.
- Water age was determined using the alternative F distribution system serving all potential customers to simulate the longest water age.

4.4 Reclaimed Water System Pressures

Water pressure is an important requirement for the irrigation systems of the potential customers. Table 4.2 and 4.3, below, show the anticipated connection pressures for both irrigation and non-irrigation uses. Anticipated connection pressures are from the modeling as described above.

As shown by the tables, a booster station is needed to match current irrigation system pressures but is not needed for non-irrigation uses. Irrigation systems generally require 60-100 psi to function as designed. The booster station will need to be added to meet the irrigation pressures or existing irrigation system may not function properly at the lower pressures. The booster station will need to discharge at 115 psi to match the existing water system pressures. Requirements for private side connections will need further investigation and discussions with individual potential customers to ensure proper and satisfactory reclaimed water delivery by the City.

Table 4.2 Comparison of System Pressures for All Non-Irrigation Uses

IDs	Name	Use	Existing Water System Pressure (psi) [a]	RW Distribution System Pressure (April - September) (psi) [b]	RW Distribution System Pressure (October-March) (psi) [b]
BP-1	AT&T	Cooling Towers	60 (from PRV)	62.9	64.8
BP-6	Seattle Times	Cooling Towers	60 (from PRV)	63.4	64.9
DT-1	City of Bothell City Hall	Fountains	60 (from PRV)	59.2	60.6
DT-8	Bothell CUD	Make-Up Water	60 (from PRV)	59.2	60.6
FS	Fill Station	Street Sweeping, Sewer Cleaning	60 (from PRV)	64.9	65.0
DT-3	Senior Housing	Toilet Flushing	60 (from PRV)	63.5	64.9
DT-5	McMenamins	Toilet Flushing	60 (from PRV)	54.8	56.2
DT-6	CamWest Development - Lot O	Toilet Flushing	60 (from PRV)	54.8	56.2
DT-7	CamWest Development - Lot K	Toilet Flushing	60 (from PRV)	59.2	60.6
DT-4	Weidner Apartments	Toilet Flushing, Fountains	60 (from PRV)	54.8	56.2

Notes:

a Assumed that customers have pressure reducing valves (PRV) for non-irrigation uses from conversation with Bothell Operations.

b Distribution System Pressure assumes 65 psi at the point of connection and does not include pressure boosting.

Table 4.3 Comparison of System Pressures for All Irrigation Uses

IDs	Name	Use	Existing Water System Pressure (psi) [a]	RW Distribution System Pressure (April - September) (psi) [b]	RW Distribution System Pressure with Booster Pump (April-September) (psi)
BP-1	AT&T	Irrigation	110-115	62.9	112.9
BP-3	Schnitzer Business Park	Irrigation	110-115	63.0	113.0
BP-4	Bothell Business Park	Irrigation	110-115	64.1	114.1
BP-5	City of Bothell Playfields	Irrigation	110-115	64.0	114.0
BP-6	Seattle Times	Irrigation	110-115	63.4	113.4
UWBCCC	UWB/CCC	Irrigation	85-90	55.0	105.0
DT-1	City of Bothell City Hall	Irrigation	80-85	59.2	109.2
DT-2	City of Bothell River Front	Irrigation	80-85	63.5	113.5
DT-3	Senior Housing	Irrigation	80-85	63.5	113.5
DT-4	Weidner Apartments	Irrigation	80-85	54.8	104.8
DT-5	McMenamins	Irrigation	80-85	54.8	104.8
DT-6	CamWest Development - Lot O	Irrigation	80-85	54.8	104.8
DT-7	CamWest Development - Lot K	Irrigation	80-85	59.2	109.2

Notes:

a Pressures assumed from conversation with Bothell Operations.

b Distribution System Pressure assumes 65 psi at the point of connection and does not include pressure boosting.

4.4.1 Booster Pump Station Requirements

As available water pressure in the King County reclaimed water force main is not sufficient to meet all Bothell customer requirements, a booster pump station is included in the preliminary distribution system. It is assumed that the booster pump station will be a packaged system. The location of the point of connection and the booster station will be determined upon further investigation. The booster station will increase the pressures in the Bothell reclaimed water system to match the existing water system pressures in the business parks of approximately 110-115 psi that is the pressure used for most irrigation systems in those areas. The booster system will include flow metering from the point of connection, supervisory control and data acquisition (SCADA) controls and will be able to meet flows in the range of 90 to 360 gallons per minute (gpm).

Table 4.4 includes planning level design criteria for the booster pump station and a preliminary quote is provided in Appendix E from Triangle Pump.

Table 4.4: Booster Pump Station Design Criteria

Suction Pressure	65 PSI
Discharge Pressure	115 PSI
Footprint	8-ft by 12-ft
Number of Pumps	1 duty low-flow, 1 peak high-flow , 1 standby high-flow
Flow Range	90 gpm to 360 gpm

4.5 Chlorine Residual Maintenance

This section summarizes reclaimed water chlorine residual requirements, King County chlorine residual system maintenance, and makes a preliminary determination as to whether additional chlorination will be required in the City of Bothell reclaimed water system.

4.5.1 DOH and Ecology Reclaimed Water Requirements

Currently, RCW 90.46 governs reclaimed water use in Washington State. Development of Washington Administrative Code (WAC) 173-219 was begun by the Washington State DOH and DOE but was delayed in December 2010. WAC 173-219 is the anticipated reclaimed water rule for the future and requires that chlorine residual to be:

- Greater than or equal to 0.2 mg/L of free chlorine; or
- Greater than or equal to 0.5 mg/L of total or combined chlorine at all points in the system.

4.5.2 King County Chlorine Residual Maintenance

Reclaimed water is chlorinated at the Brightwater Wastewater Treatment Plant and receives required chlorine contact time in the 30-inch conveyance line to the North Creek portal. The following summarizes County planned reclaimed water chlorine residual operations through the South Segment:

- A residual of 1 mg/L is maintained at the North Creek portal
- A minimum residual of 0.5 mg/L is maintained at the York Pump Station
- The County has the ability to boost the chlorine at the North Creek Portal before the water heads south to the North Creek Pump Station
- There is no ability to boost the chlorine at North Creek before it enters the City's distribution system.

4.5.3 Estimated Chlorine Residual at King County Connection

Based upon the County planned chlorine residual operations, Kennedy/Jenks did a preliminary estimate to determine the chlorine residual concentration at the point of connection to the County system. This starting chlorine residual level in the Bothell reclaimed water system is then used as an input to the hydraulic model to determine if additional chlorination within the Bothell reclaimed water system would be needed.

Methodology

Chlorine decay is generally calculated using a first order reaction with the literature citing decay coefficients from 0.48 to 17.76 per day. Chlorine decay is dependent upon many factors such as organic content, temperature and repeated dosing (Hallam, et al, 2003).

Due to the lack of information available at this time, decay coefficients of 0.5, 1.0 and 1.5 per day were chosen to represent the anticipated range of decay coefficients within the distribution system.

Results

Based on the above mentioned coefficients, Kennedy/Jenks estimates that the County will need to maintain a chlorine residual of 1.1 to 4.9 mg/L at North Creek in order to maintain 0.5 mg/L at all connection points within the City's reclaimed water distribution system.

Based on this quick level of investigation, it appears that if the County follows their planned chlorine residual maintenance plan and has the capacity to add chlorine at the North Creek Portal, additional chlorination will not be needed in the Bothell reclaimed water system. Further investigation should be done to determine the actual chlorine decay coefficient for the water entering the Bothell reclaimed water system.

4.6 Bridge Crossing over I-405 Freeway

Extension of the Bothell reclaimed water system to University of Washington-Bothell/Cascadia Community College (Area 2) and the downtown Bothell revitalization area (Area 3) requires overcrossing the I-405 freeway at the intersection of Beardslee Blvd. This intersection is shown on Exhibits A, B and C. The existing bridge has open hangers that would accommodate installation of a 6-inch reclaimed water pipeline. Figure 4.1 shows an image of the bridge crossing.

Figure 4.1: I-405 Bridge Crossing

In addition to obtaining necessary permits from Washington State Department of Transportation (WSDOT), construction would have to comply with conditions set forth by the Washington Department of Transportation Utilities Manual M22-87.01 (December 2008), WSDOT Utilities Manual, and Work Zone Traffic Control Zone Guidelines M54-44.04 (February 2012). http://www.wsdot.wa.gov/publications/manuals/fulltext/m22-87/Utilities.pdf

These compliance steps include:

- Submitting an application for pipe installation including pipeline design criteria and documenting the design is in accordance with industry design standards.
- Obtain written approval from the Headquarters (HQ) Bridge and Structures Office prior to installation.
- Submitting plans detailing the structural attachment method of the pipe to the bridge for processing and approval by the HQ Bridge and Structures Office.

WSDOT's requirements for construction over traffic include the following:

- Work above an open lane of traffic is allowed provided that the work can be done by utilizing industry standard safe work practices. Safe work practices must consider the potential risk of falling debris, tools, or equipment onto traffic.
- Vertical clearance above live traffic must be carefully considered as to not create a hazard for workers, or to vehicles passing under the work platform or equipment.
- Lane closures are required for work operations such as this that have a higher risk of significant damage or injury due to the location and nature of the work.

4.7 Reclaimed Water Distribution System Summary

Six potential alternative alignments were developed for service to a range of customers representing different levels of capital investment and reclaimed water demand. Exhibit C presents the preliminary distribution system alignment. The distribution system is the same basic alignment for all alternatives, with extensions to service customers in different areas. The system could also start off smaller and be expanded to full build out should funding become an issue.

All alignments contain the following features:

- Connection to the King County south segment along North Creek Parkway or NE 195th Street
- Addition of a booster pump station located at the point of connection
- Basic assumption that no additional chlorination is required for the Bothell system based upon County chlorine residual operation
- Extension to UW and/or Downtown requires crossing the I-405 freeway
- The alignments consist of 4-inch, 6-inch and 8-inch C900 PVC purple pipe

Section 5.0 develops capital and operations costs, estimates projected revenue, and conducts a feasibility analysis to determine which alternatives are fiscally sustainable.

Section 5: Alternative Costs and Feasibility

This section summarizes the estimated capital cost for developing the reclaimed water infrastructure summarized in the previous section and provides estimated 20-year lifecycle costs considering annual operations and maintenance, estimated reclaimed water revenues and, lastly, culminates with the presentation of the feasibility analysis for each of the alternatives.

5.1 Feasibility Analysis

As described in Section 2.5, the methodology for the feasibility analysis for the purposes of this project has been defined as the economic ability to construct, maintain and operate the reclaimed water system from the revenue generated through potential reclaimed water sales over a 20-year period. While there are arguments that the lifecycle costs and net present value analyses associated with the feasibility analysis could be over a longer period of 30 years or longer due to the anticipated useful service life of new pipelines, this period was selected as it is the likely payback period for loans secured to fund construction.

The feasibility analysis for each alternative includes the following elements:

- Estimated capital construction costs and debt repayment at 1% and 3.1% interest
- Estimated annual O&M costs
- Estimated annual reclaimed water revenues.

If the revenue can provide adequate funds to pay for the annual operations and maintenance cost along with the debt service from the capital cost, then the project is feasible. All six alternatives were evaluated independently for feasibility.

Two issues not included in the feasibility analysis are those for the wholesale reclaimed water rate charged by the County and the lost revenue to the City's existing potable water utility. Ultimately, the negotiations between the City and County regarding these two issues will likely impact the feasibility study calculations and, therefore, the feasibility of alternatives. For the purposes of the Study, it was assumed these negotiations would be conducted the completion of the Study considering specific alternatives and estimated flows developed for specific alternatives deemed feasible.

5.2 Estimated Capital Construction Costs

Capital construction costs are broken down into four components for each alternative depending upon the ownership of the property or facility. The four components and associated assumptions include:

1. **Point of Connection** – including connection to King County South Segment reclaimed water pipeline and booster pump station. Cost was estimated based on current necessary system component prices, as shown in Appendix E. No property acquisition cost was included because the booster station could be located on City-owned property.

2. **Distribution System Backbone** – including main transmission line installation, valves, fittings, appurtenances, paving, and traffic control. Cost was estimated based on current necessary system component prices, as shown in Appendix E.

3. **Meter Installation and Main Connection** – individual reclaimed water meter and vault installation and connection to transmission main. Meter box and main connection costs were estimated using the Customer Metering Technical Memorandum and Specification completed by Kennedy/Jenks for the County in 2011 included in Appendix D.

4. **Private Side Connection** – estimated piping and installation downstream of the reclaimed water meter. Industrial, irrigation and residential/commercial connections were assumed to be $20,000, $3,000 and $2,000, respectively. Industrial connection costs were assumed to be considerably larger than other private side connections because of the potential for significant additional plumbing required to retrofit existing systems for reclaimed water.

Capital construction costs for the six alternatives are shown in Table 5.1. These costs include markups for contractor general conditions, overhead and profit, sales tax, contingency and engineering legal and administrative costs as detailed in the Basis of Planning in Table 2.3. The cost estimates are consistent with an AACE Class 5 Order of Magnitude with an accuracy of +50% to -30%. This range of potential capital costs are summarized in the final column of Table 5.1. Detailed breakdowns of the cost estimates are included in Appendix E.

Table 5.1: Estimated Capital Construction Costs for Each Alternative

Alternative	Point of Connection ($)	Distribution System ($)	Service Connection ($)	Private Side Connection ($)	Estimated Capital Cost (Million $)	Capital Cost Range +50%/-30% (Million $)
A	$273,000	$1,119,000	$394,000	$60,000	$1.84M	$2.77M/$1.29M
B	$273,000	$1,855,000	$497,000	$160,000	$2.78M	$4.18M /$1.95M
C	$273,000	$2,529,000	$534,000	$207,000	$3.54M	$5.31M /$2.48M
D	$273,000	$3,939,000	$786,000	$288,000	$5.28M	$7.93 M /$3.70M
E	$273,000	$2,469,000	$290,000	$128,000	$3.16M	$4.74M /$2.21M
F	$273,000	$3,939,000	$823,000	$335,000	$5.37M	$8.05M /$3.76M

Notes:

Cost Estimates include the following markups:

7% for Contractor General Conditions

12% for Contractor Overhead and Profit

9.5% for Sales Tax

35% for Contingency

30% for Engineering, Legal and Administrative Costs

5.3 Estimated Operations and Maintenance Costs

Estimated operations and maintenance costs for the distribution system will include general operations, administration, sinking funds for equipment replacement, as well as system maintenance and electricity consumption. Table 5.2 describes the cost components and the assumptions associated with each.

Table 5.2: Operations and Maintenance Cost Components

O&M Component	Assumptions
General Operations	Assumed 32 hours per month at a $75 labor rate. Hours are included for supervision, troubleshooting and miscellaneous tasks.
Administration	Assumed 32 hours per month at a $75 labor rate. Hours are included for meter reading, customer billing and billing inquiries.
Sinking Fung Meter Replacement	Assumed $500 per meter per year for meter replacement.
Pump Station Maintenance	Assumed to be 7% of the pump station capital cost.
Pipeline Maintenance	Assumed to be $10,000 per mile of pipeline.
Power Cost	Puget Sound Energy rates for General Service used. Rates are $0.091386/kWh (October-March), $0.088288/kWh (April-September) and $24.55/month for three phase power. Assumed six month operation of small booster pump and six month operation of large booster pump.

The estimated operations and maintenance cost associated with each alternative is shown below in Table 5.3. The cost for each component is listed based on the assumptions presented above. As can be seen, annual O&M costs are estimated to range from $62,000 for Alternative A to $102,000 for Alternative F.

Table 5.3: Annual Operations and Maintenance Costs for Each Alternative

Alternative	A	B	C	D	E	F
Pipe Length (Miles)	1.39	2.34	2.85	4.81	2.94	4.81
Number of Meters	3	5	7	13	8	15
General Operations	$14,400	$14,400	$14,400	$14,400	$14,400	$14,400
Administrative	$21,600	$21,600	$21,600	$21,600	$21,600	$21,600
Sinking Fund Meter Replacement	$1,500	$2,500	$3,500	$6,500	$4,000	$7,500
Pump Station Maintenance	$5,250	$5,250	$5,250	$5,250	$5,250	$5,250
Pipeline Maintenance	$13,900	$23,400	$28,500	$48,100	$29,400	$48,100
Electricity	$4,905	$4,905	$4,905	$4,905	$4,905	$4,905
TOTAL:	**$62,000**	**$73,000**	**$79,000**	**$101,000**	**$80,000**	**$102,000**

5.4 Estimated 20-year Lifecycle Costs

Table 5.4 presents the estimated 20-year life cycle costs for each alternative, summarizing total pipeline length, capital cost and annual operations and maintenance costs. Twenty-year life cycle cost estimates for the alternatives range from approximately $2.79 million (M) for Alternative A serving the business parks to approximately $6.52M for Alternative F that would provide reclaimed water services to the full study area. Note again that lifecycle costs are for a

20-year period, but the anticipated useful service life of the new reclaimed water pipelines is 50 years.

Table 5.4: 20-year Life Cycle Cost Estimates

Alternative	Pipe Length (miles)	Capital Cost ($)	Annual O&M Cost ($)	20-year Lifecycle Cost ($)
A	1.4	$1.84M	$62,000	$2.79M
B	2.3	$2.78M	$73,000	$3.76M
C	2.9	$3.54M	$79,000	$4.49M
D	4.8	$5.29M	$101,000	$6.44M
E	2.9	$3.16M	$80,000	$4.20M
F	4.8	$5.37M	$102,000	$6.52M

5.5 Potential Reclaimed Water Revenues

Potential revenues from reclaimed water sales will be the backbone of supporting the reclaimed water system financially to pay for debt repayment and ongoing operations and maintenance of the system. Revenue was calculated by adding the anticipated reclaimed water sales using the current City water rate structure. Based on reclaimed water customer interviews conducted at the beginning of the project, the reclaimed water rates used in the analysis are based on a reclaimed water rate structure of 70% of drinking water rates. The City's current drinking water rates and rate structure are included in Appendix F.

Tables 5.5, 5.6 and 5.7 present estimated water meter demands and usage charges used to estimate potential reclaimed water revenues in Table 5.8.

Table 5.5: 70% Discounted Monthly Meter Charges by Classification

Meter Size	Commercial, Business and Industrial	Multifamily Residential	Irrigation
5/8, 3/4	$9.20	$9.91	$7.36
1	$22.38	$21.88	$14.92
1 1/2	$39.35	$41.46	$27.34
2	$61.92	$64.81	$42.27
3	$121.77	$129.75	
4	$189.21		
6	$376.54		

Table 5.6 summarizes the estimated water rates for reclaimed water in 2012 dollars. Annual revenue from the distribution of reclaimed water was estimated using 70% of the City's current water rates, meter charges and residential unit charge and the potential demand and meter size.

Table 5.6: 70% Discounted Water Usage Rates by Classification

Commercial, Business and Industrial Classification	
Usage	*Usage Charge ($/CCF)*
November - June	$1.74
July-October	$2.97
Multifamily Residential Classification	
Usage (CF/unit)	*Usage Charge ($/CCF)*
0-300	$1.53
301-700	$2.23
701-1000	$2.86
1001-2000	$3.65
2001+	$4.14
Irrigation Classification	
Usage (CF)	*Usage Charge ($/CCF)*
All Usage	$4.03

Table 5.7 shows the potential reclaimed water demand from each potential customer by classification.

Table 5.7: Potential Reclaimed Water Demands by Classification

			Demand by Classification (CCF/yr)		
Potential Customer	**Area**	**Anticipated Meter Size**	**Irrigation**	**Domestic Multifamily**	**Commercial, Business and Industrial**
AT&T	1	2"	6,100	-	44,157
Schnitzer Business Park	1	2"	21,407	-	-
Bothell Business Park	1, 1A	2"	9,800	-	-
City of Bothell Playfields	1, 1A	1 1/2"	1,736	-	-
Seattle Times	1, 1A	2"	5,519	-	4,397
Fill Station	1, 1A	N/A	-	-	3,029
UWB/CCC	2	1 1/2"	2,599	-	-
City of Bothell City Hall	3	1/2"	96	-	-
City of Bothell River Front	3	1 1/2"	1,446	-	-
Senior Housing	3	1 1/2"	50	1,293	-
Weidner Apartments	3	1 1/2"	50	1,815	-
McMenamins	3	1 1/2"	852	-	1,480
CamWest Development - Lot O	3	1 1/2"	744	1,044	-
CamWest Development - Lot K	3	1"	50	454	-
Bothell CUD	3	1/2"	-	-	0.14

In order to calculate the revenue from monthly meter charges, 70% of the irrigation meter size charges were applied to the anticipated meter size. The irrigation meter rate was used because nearly all of the users will utilize the water for irrigation and the lower meter charge provides a conservative estimation method. In order to calculate the revenue from usage charges, 70% of the corresponding rate by classification was applied to the corresponding potential water usage.

- Residential multifamily units will remain in the lowest rate tier because they will only be using the water for toilet flushing and will not exceed using 300 cubic feet (CF) per month.
- Commercial, business and industrial rates were assumed to be a weighted average of the two seasonal rates because usage is assumed to be consistent through the year for this classification.
- Residential unit charges were calculated based on the number of anticipated units gathered during the customer interviews.

The estimated annual revenues from reclaimed water for each alternative are shown below in Table 5.8 in 2012 dollars. Estimated annual revenue is anticipated to range from $86,000 in Alternative A to $340,700 in Alternative F.

Table 5.8: Estimated Annual Reclaimed Water Revenue by Alternative

Alternative	Usage Charge	Meter Charge	Residential Unit Charge	Estimated Annual Revenue
A	$84,700	$1,300	$0.00	$86,000
B	$290,400	$2,400	$0.00	$293,000
C	$300,900	$2,700	$0.00	$304,000
D	$313,900	$4,400	$11,600	$329,900
E	$23,500	$2,000	$11,600	$37,100
F	$324,400	$4,700	$11,600	$340,700

5.6 Feasibility Analysis

The feasibility analysis consists of comparing the system costs of debt service, operations and maintenance with the estimated revenue for each alternative on an annual basis for the 20-year period. The annual net accumulation is the revenue minus cost for each alternative and was calculated for each year of the analysis. If the accumulation was positive, the revenue generated that year was able to finance all the necessary cost associated with the system. If the accumulation is negative, there is not sufficient revenue to fund the system. The Net Present Value (NPV) of each alternative was calculated by taking the sum of the appropriately discounted yearly accumulations.

The feasibility analysis was completed using two loan options that conservatively estimate the project finances under a scenario where development of the reclaimed water infrastructure for providing reclaimed water services in the City is funded entirely by local, low interest loans. The two options considered include a loan at 1.0% interest through the Washington PWTF or loan at 3.1% interest through the Washington Clean Water State Revolving Fund (CWSRF) program.

The NPV analysis was performed using inflation and discount rates of 3.0%. As summarized in the basis of planning, system costs were estimated by assuming a 20-year payback of capital costs via loan programs.

In order to anticipate increased demand and customers to the system, starting in year three, one additional meter was assumed to be added every five years. With the new meter cost, additional funds were added to the meter replacement sinking fund. Reclaimed water demands, electrical costs and revenues were also increased 5% with each additional water meter added. Alternative D and F included both area 1 and 3 and, therefore, had two new meters added every five years to account for the larger potential for additional demand due to the larger distribution area.

The feasibility analyses for the 1.0% and 3.1% loan scenarios are presented in 2012 dollars in Tables 5.9 and 5.10, respectively. Detailed feasibility analysis spreadsheets are included in Appendix G. A positive NPV demonstrates that a project is feasible because it can generate excess revenue compared to costs of the system. A negative NPV demonstrates that the project will not provide revenue to pay for all costs associated with the system.

As shown in the tables, Alternatives B, C and F are feasible, depending on the interest rate and funding terms obtained for the project. Over the 20-year period, the revenues generated from these alternatives will provide for the cost of constructing, maintaining and operating these systems. These analyses do not consider the opportunity for funding a portion of the project through grants that has strong potential for this project or the useful service life of reclaimed water pipelines that is anticipated to be 50 years or more.

Table 5.9: Feasibility Analysis at 1% Interest Rate

Alternative	Potential Revenues	Net Present Value of Expenses (1% Interest)	Net Present Worth (1% Interest)	Feasibility Result
A	$1,464,000	($2,793,000)	($1,329,000)	Negative
B	$4,980,000	($3,759,000)	$1,221,000	Positive
C	$5,164,000	($4,493,000)	$671,000	Positive
D	$6,099,000	($6,438,000)	($339,000)	Negative
E	$631,000	($4,204,000)	($3,573,000)	Negative
F	$6,299,000	($6,522,000)	($223,000)	Negative

Table 5.10: Net Present Value Evaluation at 3.1% Interest Rate

Alternative	Potential Revenues	Expenses	Net Present Worth	Feasibility Result
A	$1,464,000	($3,093,000)	($1,629,000)	Negative
B	$4,980,000	($4,212,000)	$768,000	Positive
C	$5,164,000	($5,069,000)	$95,000	Positive
D	$6,099,000	($7,298,000)	($1,199,000)	Negative
E	$631,000	($4,718,000)	($4,087,000)	Negative
F	$6,299,000	($7,395,000)	($1,096,000)	Negative

Section 6: Potential Funding Sources Overview

This section describes potential financing and funding sources and outlines current funding mechanisms in the State of Washington.

6.1 Funding Sources for Reclaimed Water Projects in Washington

Capital costs for implementing a reclaimed water program are often financed through long-term debt, such as water and wastewater revenue bonds and low-interest loans. Long-term debt is usually paid back over 20–30 years, so this method of financing helps to equate expenditures with the useful life of the facilities.

In general, debt financing allows a municipality to undertake a larger share of its capital improvements program in the near term and/or mitigate immediate impacts on rates. Creative debt structure can be explored where payment schedules are tied to forecasted usage demands, thereby increasing annual payments in proportion to projected increases in reclaimed water demand. This approach provides rate equity between front-end system users and future users.

Current grants and loans and the total available funding that could be used for reclaimed water projects in Washington are listed in Table 6.1.

Table 6.1: Grant and Loan Funding Available for Washington Reclaimed Water Projects

Source	Funding Amount for FY 2008-2009 (millions)
Ecology Reclaimed Water Grants Program	$5.5
Washington Centennial Clean Water Program – Grants and Loans (competitive only)[a]	$13.8
USDA Rural Development Grant Program	N/A
Community Development Block Grant[b]	$12
State Water Pollution Control Revolving Fund Loan Program[c]	$85.4
Washington Public Works Trust Fund Loan Program	N/A
USDA Rural Development Loan Program	N/A
EPA State and Tribal Assistance Grant Program	N/A
EPA Five Start Restoration Program	N/A

Notes:
Source: Amounts are per Mary Ann Ness, King County WTD, unless otherwise noted below.
N/A indicates that information was not located.
a Hardship facilities only; an additional $6.92 million allocated for nonpoint activities.
b 2008 only (CTEC, 2007).
c Facility loans only

DOE's Water Quality Program has implemented a combined funding cycle for the Centennial, Federal Clean Water Act Section 319 Nonpoint Source, and State Revolving Fund programs. All programs may be applied for on one application and all eligible projects for funding under any one of the programs must appear on a statewide Final Offer and Applicant List. Applications are evaluated and prioritized on a draft offer list, which is sent to the Legislature prior to budget development. There is a 30-day public comment period, after which the Legislature passes a budget and the Final Offer List is issued with funding letters.

Several years ago, DOE amended the selection process of financial assistance programs to award additional points to applications that include reclaimed water as an element in their project proposals, thus increasing their competitiveness with respect to other applications (Ecology, 2000).

6.2 Loan Programs

6.2.1 State Water Pollution Control Revolving Fund Loan Program

The State Revolving Fund financial assistance program is managed by the states under U.S. Environmental Protection Agency (EPA) guidance. It is funded 80% by the federal government and 20% by state funds. Loans can be up to 100% of project expenditures.

Washington's State Water Pollution Control Revolving Fund is administered by DOE. The program provides loans for planning, design, and/or construction of water pollution control facilities and other high-priority water quality projects that are consistent with the Clean Water Act. Loan rates are 60% of average market rates for up to 20 years, and may be reduced for facilities serving low-income areas. Current interest rates are 1.5% for terms up to five years and 3.1% for terms from 5–20 years.

Funding is available to public agencies for projects included on the statewide Final Offer and Applicant List. In fiscal years 2008 and 2009, $45.2 and $40.2M are anticipated to be available, respectively, for facility loans. Further information can be found at http://www.ecy.wa.gov/programs/wq/funding/2009/.

6.2.2 Centennial Clean Water Program

The Centennial Clean Water Program, administered by DOE, provides grants and low-interest loans to communities that qualify for "hardship" assistance for high-priority water quality projects through appropriations from the state Legislature. Funds may be used for planning, design, and/or construction of water pollution control facilities and nonpoint source pollution control management programs. Loan rates are 60% of average market rates for up to 20 years and may be reduced for facilities serving low-income areas. Current interest rates are 1.5% for terms up to five years and 3.1%for terms from 5-20 years.

Funding is available to public agencies for projects included on the statewide Final Offer and Applicant List. In each of the fiscal years 2008 and 2009, $6.9M is anticipated to be available for hardship facilities loans and grants. Further information can be obtained at http://www.ecy.wa.gov/programs/wq/funding/2009/.

6.2.3 Public Works Trust Fund Loan Program

Washington State's Public Works Board provides low-interest loans to finance public works projects. Reclaimed water projects are eligible for PWTF financing. Pre-construction and construction loans are available with terms up to 20 years with interest rates between 0.5% and 2% based on the local match. Planning loans with 6-year terms and 0% interest are also available, as are emergency loans at 3% interest for 20 years. Further information can be found at http://www.pwb.wa.gov/FORMS.HTM.

6.2.4 USDA Rural Development Loan Program

The U.S. Department of Agriculture (USDA) Rural Development Loan Program offers funding to public bodies, non-profit organizations, and recognized Indian tribes that serve rural areas and towns with populations of 10,000 or less for water, wastewater, or solid waste projects. Further information can be obtained at http://www.usda.gov/rus/water/index.htm.

6.3 Bond Financing

The types of bonds usually used for financing public works projects are local government tax-exempt bonds. RCW 36.94.200 authorizes counties to issue general obligation bonds, revenue bonds, and local improvement district bonds.

6.3.1 General Obligation Bonds

General obligation bonds are backed by the general taxing authority of local government and are often repaid using utility revenues when issued in support of an enterprise fund. Revised Code of Washington (RCW) 39.46.110 governs government obligation bonds.

6.3.2 Revenue Bonds

Revenue bonds, covered by RCW 36.67.500, are issued to finance specific projects, or groups of projects, and assets from which revenues can be derived (such as water systems). They are secured by the revenue of an enterprise fund and have no claim to other funds. Revenues, such as user rates and capacity charges, are used to make payments on the bonds. Tax revenues of the county would not be used to secure or guarantee payment on revenue bonds. Revenue bonds are typically perceived to carry higher risk than government obligation bonds and, therefore, often carry a slightly higher interest rate. The perceived risk is derived from the possibility that the projects financed will not bring in enough revenue to pay bondholders.

6.3.3 Utility Local Improvement District

Local improvement districts (LIDs) are special assessment districts developed to provide local improvements to property owners in the district and must be approved by the local government and the benefiting property owners. LIDs provide a means of financing capital improvement projects. Utility local improvement districts (ULIDs), a variation of LIDs, require that the debt for the improvement project be repaid by the benefiting property owners and by utility revenues. ULID bonds are tax-exempt, but are not always guaranteed by the municipality; developers, therefore, must often guarantee the bonds.

Generally, water and sewer projects are governed by RCW 36.94.220, which authorizes the establishment of ULIDs to levy special assessments on properties benefited by the local improvements. The assessments may not exceed the combined cost of the direct improvements plus the general wastewater/water facilities costs allocable to the district. Similarly, the assessment per parcel may not exceed the benefit of the improvement to that parcel. This benefit is defined as the difference between the fair market value of the property before and after implementation of the local improvement project.

Several options exist by which the cost of the utility improvement is distributed among the participating property owners. Assessment methods include mathematical cost distribution formulas such as front foot (the parcel length adjacent to the street), lot area, or zone termini (in which the costs are distributed based on a grid system of north-south and east-west streets). Mathematical cost distribution methods are typically easier to justify to property owners; however, they do not always provide equitable distribution of the improvement benefits. In such a case, a special benefit analysis method may be warranted. A qualified appraiser can prepare this analysis. It is recommended that a special benefit analysis be conducted for projects encompassing mixed land use zones or involving significant topographic changes within the ULID.

6.4 Grants

Funding capital costs through grants reduces the debt service component of the annual revenue requirement that is recovered through reclaimed water rates.

6.4.1 Reclaimed Water Grants Program

The Reclaimed Water Grants Program, administered by DOE, provides grants to local governments in the Puget Sound region for completion of reclaimed water projects. For the 2007–2009 biennial budget years, $5.5M was available. Although there is no maximum ceiling for capital projects, the target is to fund three to six high priority capital projects with varying match amounts required. Priority will be given to projects in water-short areas and areas where reclaimed water will restore important ecosystem functions in Puget Sound. Feasibility studies are eligible for 100% funding up to a maximum of $250,000. Applications were due 28 September 2007.

The County worked with jurisdictions to apply for state grants that could facilitate early connection to the Brightwater reclaimed water system. Further information can be obtained at http://www.ecy.wa.gov/programs/wq/funding/ReclaimedWaterGuidelines.pdf.

6.4.2 Centennial Clean Water Program

The Centennial Clean Water Program, administered by DOE, provides grants and low-interest loans to public bodies for high-priority water quality projects through appropriations from the state Legislature. Funds may be used for planning, design, and/or construction of water pollution control facilities and nonpoint source pollution control management programs.

Funding is available to public agencies for projects included on the statewide Final Offer and Applicant List. It is anticipated that $6.9M will be available for hardship facilities loans and grants

in each of the fiscal years 2008 and 2009. Further information can be obtained at http://www.ecy.wa.gov/programs/wq/funding/2009/.

6.4.3 USDA Rural Development Grant Program

The USDA Rural Development Grant Program offers funding to public bodies, non-profit organizations, and recognized Indian tribes that serve rural areas and towns with populations of 10,000 or less for water, wastewater or solid waste projects. Further information can be obtained at http://www.usda.gov/rus/water/index.htm.

6.4.4 Community Development Block Grant Program

The Washington State Department of Trade and Economic Development offers grants to cities and towns with less than 50,000 in population or counties with less than 200,000 in population for water, wastewater, and solid waste projects. Projects must principally benefit low- and moderate-income persons (80% of county median income). Applicants must be non-entitlement jurisdictions or must not be participating in a U.S. Department of Housing and Urban Development (HUD) Urban County Entitlement Consortium. Further information can be obtained at http://www.cted.wa.gov/site/314/default.aspx.

6.4.5 State and Tribal Assistance Grant Program (STAG)

EPA's State and Tribal Assistance Grant Program (STAG) grants are available to states, tribes, and universities to carry out compliance assurance activities and to build their capacity to enforce environmental laws and regulations. Eligible activities include training, studies, and surveys. Awards typically range from $50,000 to $200,000. Further information can be obtained at http://www.epa.gov/compliance/state/grants/stag/index.html.

6.4.6 Five Star Restoration Program

EPA's Five Star Restoration Program offers grants to local public agencies, non-profit organizations, and educational institutions to provide environmental education and training through projects that restore wetlands and streams. The amount awarded to a project ranges from $5,000 to $20,000. Further information can be obtained at http://www.epa.gov/owow/wetlands/restore/5star/.

6.5 Other Funding Options

6.5.1 Voter Approved Taxes

Funding infrastructure through property taxes offers some advantages over using utility rates and fees. Costs are shared by a larger group, which subsequently lowers per-unit prices. While using taxes to fund reclaimed water facilities provides an alternative revenue source to using rates and fees, this option would require significant public support.

The Funding Work Group of the Puget Sound Partnership identified the Maryland "Flush Tax" as a promising model to raise revenue to protect Puget Sound.14. The Maryland Legislature enacted the Flush Tax in 2004. It is a $30 flat tax imposed on all residential parcels, collected as a $2.50 surcharge on monthly wastewater bills or a $30 dollar annual fee for owners of septic systems. It is earmarked for the cleanup of Chesapeake Bay and surrounding bodies of water

by reducing nitrogen and phosphorus discharge into waterways. The Funding Working Group calculated that a similar Puget Sound Flush Tax would generate approximately $54M per year, $26.4M from King County and $28.1M from the rest of Puget Sound (Funding Working Group, 2006).

Florida's regional water management districts have taxing authority. They allocate a portion of tax revenues to grant programs to develop alternative water supply sources, with a high priority placed on reclaimed water projects. California voters have passed several bond measures (Propositions 13, 50, and 84) that include grant funding for reclaimed water projects.

6.5.2 Developer Contributions and Latecomer Agreements

Funding capital costs through developer contributions reduces the debt service component of the annual revenue requirement that is recovered through reclaimed water rates. Special agreements can be reached with developers or industrial users that require the contribution of either assets or money to offset the costs of a particular project. When reclaimed water is to be used for a specific purpose, such as cooling water, it may be possible to obtain the capital financing for new transmission facilities directly from one or more major users that benefit from the available reclaimed water supply. Onsite storage is another fairly common contribution by large users to reclaimed water systems.

Utilities may require developers to install local collection and distribution facilities as a condition of development. A utility may also require a developer to extend transmission and trunk lines (as well as pump stations) to provide capacity for the development. Further, the utility may require the developer to oversize facilities to accommodate future additional development. The developer may be reimbursed for the cost of oversized facilities directly by the utility or through a latecomer agreement. Under the terms of a latecomer agreement, future developments using the excess capacity will pay the initial developer directly for the cost of the capacity. Latecomer agreements provide a reimbursement to developers for a period of not more than 15 years by any owner of real estate who did not contribute to the original cost of facilities and who subsequently taps into or uses them.

6.5.3 Property Owner Credit Offsets

One of the ways that Largo, Florida, uses to finance extension to the reclaimed water distribution system is through credit offsets. Property owners construct and pay for extending the reclaimed water system to their property. Largo may then provide a credit for water used against the cost of the installation. Once the credit is issued, Largo takes ownership of the distribution line. When the credits equal the cost of the installation, the customer begins paying for the water at the prevailing rate. Largo is not responsible for reimbursing the property owner except through issuing credits for water used. This method was "instrumental" in installing the distribution infrastructure at little to no cost to the city (Southwest Florida Water Management District, 1999).

6.5.4 Voluntary Customer Contributions

Voluntary customer contributions could be collected through water or wastewater bills, similar to contributions collected for low-income customers. Seattle City Light operates the Green Power Program that funds local renewable energy demonstration projects through voluntary customer

contributions collected with electric bill payments. These programs often include a check box on monthly bills allowing users to pay the optional monthly program contributions. Such a voluntary program could be a good public relations strategy that shows public support for investment in reclaimed water use.

6.6 Funding Summary

Funding capital costs is a primary constraint in implementing new reclaimed water projects. However, as described in this section, there are many funding mechanisms available such as loans, bonds, grants, and other sources.

For purposes of the feasibility study, the most standard funding mechanism of low interest loans will be used for estimating project financing. However, in further development of the reclaimed water distribution system, the City should conduct a detailed project funding study, and pursue all mechanisms possible such as grants to lower project costs.

Section 7: Conclusions and Recommendations

This section summarizes the conclusions, recommendations and next steps resulting from the Study as well as some suggestions for further analysis as the City and County continue discussing opportunities for reclaimed water service in Bothell. This section also provides policy and implementation considerations that are typically considered, along with the financial implications, when a utility is considering establishing and operating a reclaimed water program.

7.1 Conclusions

Feasibility is dependent upon the context and purpose in which a project is being evaluated. For this project, feasibility has been defined based on the ability of specific alternatives to fund the capital construction costs and annual O&M costs with projected revenues from sales of reclaimed water to potential customers over a 20 year period. Each of the six alternatives was evaluated using this feasibility metric using a 20-year net present worth analysis considering the time value of money.

Customer interviews conducted as part of the Study indicate there is a high level of interest from potential reclaimed water customers in the City. The City is also uniquely placed in close proximity to the County's Brightwater Reclaimed Water System to cost-effectively become a reclaimed water distribution purveyor.

Based on the feasibility definition above, Study assumptions and financing terms and conditions, alternatives B and C are feasible. Alternative F is potentially feasible depending upon funding alternatives. Over the 20 year period, the revenues generated from these alternatives with favorable financing terms and conditions will provide for the cost of constructing, maintaining and operating the required reclaimed water distribution systems. These analyses ***do not*** consider lost water utility revenues, the County reclaimed water wholesale rate, the opportunity for funding a portion of the project through grants that would improve the feasibility economics or the useful service life of reclaimed water pipelines that are anticipated to be 50 years or longer.

Alternative B providing reclaimed water service to Area 1 (Bothell and Schnitzer Business Parks) has an estimated capital cost of $2.78M with a range of $1.95M to $4.18M, estimated annual O&M costs of $73,000, annual reclaimed water revenues of $293,000 and a 20-year NPW at 1% and 3.1% interest financing of $1.22M and $0.77M, respectively. Implementation of Alternative B would lower the City's water utility revenues approximately $223,100. Alternative B is feasible and has the highest positive net present value.

Alternative C providing reclaimed water service to Areas 1 and 2 (Bothell and Schnitzer Business Parks and Cascadia/UW-Bothell campus) has an estimated capital cost of $3.54M with a range of $2.48M to $5.31M, estimated annual O&M costs of $79,000, annual reclaimed water revenues of $303,000 and a 20-year NPW at 1% and 3.1% interest financing of $0.67M and $0.09M, respectively. Implementation of Alternative C would lower the City's water utility revenues approximately $232,000. Alternative C is feasible and offers excellent potential for future expansion of the City's reclaimed water system to potential growth in the immediate vicinity associated with the Cascadia/UW-Bothell campus.

While not considered feasible at this time, Alternative F providing reclaimed water service to Areas 1, 2 and 3 (Bothell and Schnitzer Business Parks ,Cascadia/UW-Bothell campus and the downtown revitalization area) has an estimated capital cost of $5.37M with a range of $3.76M to $8.05M, estimated annual O&M costs of $102,000, annual reclaimed water revenues of $340,700 and a 20-year NPW at 1% and 3.1% interest financing of $(0.22M) and $(1.09M), respectively. Alternative F may also provide opportunities in Area 3 (downtown revitalization area) that would bring in outside funding sources from private partnerships and grant opportunities not considered in the feasibility analysis. However, Area 3 is on a shorter term timeline than the other areas; in order to coordinate with the planned private and public construction, the City and County would need to reach an agreement on Alternative F sooner than Alternatives B and C.

Based on the feasibility study evaluations, Alternatives A, D and E are not considered feasible at this time.

7.2 Recommendations

It is recommended that City and County staff continue discussions related to Alternatives B and C, which are both feasible based on the specific assumptions of this Study. Alternative F may also be considered if there is interest in expanding reclaimed water use to downtown Bothell, but is not considered feasible without outside funding. The discussions between the parties should include wholesale and retail rate setting, capital funding options and other financial considerations. Ultimately, the feasibility calculations may need to be updated as assumptions are refined, water utility revenue losses are considered and the wholesale reclaimed water rate charged by the County is determined in negotiations with the City. These updates would then help inform the negotiations between the two parties and assure the revenues and expenses for a specific alternative selected for implementation are sustainable.

Since, all of the potential customers in the interview process were interested in using reclaimed water if it was economically feasible for their operations, it is recommended the City and County develop a communication plan to continue building support for the program and to keep potential customers engaged in the development process. For example, the customers asked for additional information on reclaimed water quality and quantity. In addition, reclaimed water rates based on the water demand projections and capital cost estimates should be investigated with customers to determine if the water rates will meet the potential customers' expectations communicated in the outreach interviews. Implementation of a communication plan is critically important to ensure information and momentum is not lost as the City and County move forward in their development of a reclaimed water program.

The City and County should continue to search for additional potential customers. Many future customers and demands exist that were not readily identified in this project. Further contact and interviews should be conducted to establish relationships with these potential future customers. A marketing campaign to attract new businesses with large water needs to the City could also be considered. Additional revenue from new water demands will increase the feasibility of the system economically.

From a constructability standpoint, there are several creek crossings and the I-405 freeway crossing that will need some additional investigation and, ultimately, permitting if the project is to proceed. It is recommended the City begin discussions with WSDOT and other agencies at

such a time that a specific alternative is proposed for implementation, likely beginning with a more detailed follow-up investigation to develop the construction details that will be required prior to consultation.

7.3 Policy and Implementation Considerations

This section provides some of the policy and implementation considerations that are typically considered, along with the financial implications, when a utility is considering establishing and operating a reclaimed water program.

7.3.1 Institutional Arrangements

The organizational framework adopted by a City for the distribution and sale of reclaimed water can be a factor when considering implementing a reclaimed water program. Important institutional relationships to consider include both external relationships (i.e., amongst utilities) and internal relationships (i.e., between departments within a utility).

Many models can be used for implementing a reclaimed water program. Responsibility for various activities (from distribution to end user delivery) may be assigned to different parties, depending upon their historical roles and technical expertise in the various arenas of water resource management. Some of the more common frameworks are described below:

Utility Framework

Type of Structure	Retail Distribution	Impact on the City of Bothell
Single-Entity	Combined Water/Wastewater/Reclaimed Water utility	Create one new combined utility
Dual-Entity	Water Utility (potable and reclaimed) and a wastewater utility	Place reclaimed water inside the existing water utility
Fully Separated Roles	Water, Wastewater and Reclaimed water are 3 separate utilities	Create a new reclaimed water utility

A single-entity arrangement is a municipality that provides both water (potable and reclaimed) and wastewater services to customers on a retail basis. On the other end of the spectrum, an entirely new utility may be created to handle solely the distribution and billing of reclaimed water. Some utilities implement a hybrid with one department accounts, billing and finances for water, wastewater and reclaimed water but have three separate operation and maintenance divisions. The City will determine the most appropriate institutional arrangement to pursue, possible considering a community utility district (CUD) with a third party purveyor.

7.3.2 Reclaimed Water Retailer Roles and Responsibilities

The organizational framework selected will also lead to delineations of operation and maintenance roles and responsibilities among the various parties involved. If a reclaimed water program is desired, the City and County will need to clarify the roles and responsibilities for operations, maintenance, customer development and care. Some preliminary considerations are included below to spur discussions.

7.3.2.1 Design, Construction and Ownership of Reclaimed Water Facilities

Typically, the retailer will design, construct, and own the distribution lines and King County builds and owns the transmission lines. Typically, the end user builds and owns the service line to their facility. The City could choose to assist the end user with funding all or portions of the end users connection infrastructure. The connection to the County reclaimed water system by the City and downstream connections by City reclaimed water customers will need to meet County engineering and construction standards.

7.3.2.2 Distribution System Operations and Maintenance

Typically, the utility has the responsibility of delivering reclaimed water to customers, since many end users may already be water customers of these utilities. As such, it would naturally follow that the retail entity would maintain control of O&M responsibilities for the portions of the distribution system within their service areas. The County will work with the City to develop standards and O&M requirements to ensure the City and County systems are compatible. Typical O&M responsibilities for a reclaimed water retailer may include: maintaining backflow preventers, meters, and distribution lines; monthly meter and billing of customers; reporting usage to the County for the County's annual reporting requirement to Ecology; annual training of all operations staff and customers; and signage at all end use locations. Typically, the County provides support for the planning of these activities, conducts training and assists in the implementation when requested. These O&M elements would need to be negotiated between the parties.

7.3.2.3 Water Quality Monitoring

As holder of the Washington State reclaimed water permit primary entity responsible for ensuring monitoring is planned, executed and reported to Ecology and the Washington State Department of Health (Health), the County will work with City to develop monitoring and reporting requirements that will be in compliance with the permit. The County's reclaimed water permit requires 0.5 mg/l chlorine residual at the point of customer connection. Based on the County’s planned operations for chlorine residual maintenance in the South Backbone system, preliminary estimates indicate that no additional chlorine addition will be required within the Bothell reclaimed water distribution system. However, in these types of multiple-entity arrangements, it is common for agreements to be developed that clearly outline distribution system and/or end use water quality monitoring and reporting requirements for each party.

7.3.3 Customer Responsibilities

At the outset of reclaimed water program implementation, customers face two potential capital cost-related responsibilities:

1. onsite retrofits; or
2. cross connection control.

In some cases, the utility may assist with these issues (both technically and financially), but typically they are handled primarily by the customer. Onsite plumbing retrofits may be necessary to accommodate reclaimed water pressures or flows that differ from what the customer historically experienced. A separate meter dedicated to reclaimed water will be necessary in all situations. System modifications may also be required to incorporate certain material types or

styles (e.g., purple-colored pipe, taped pipe, and/or irrigation sprinkler heads are required in some applications of reclaimed water).

Adequate cross connection control is required in those cases where customers retain a connection to potable water supplies. In most situations, this will involve the installation of a reduced pressure backflow assembly or an air gap. It is then typically the customer's responsibility to maintain the assembly and obtain regular (i.e., yearly) testing to ensure continued effective operation.

Other customer responsibilities often include ensuring annual training of employees with regard to use of reclaimed water and maintenance of reclaimed water facilities, as well as ensuring proper signage is in place.

7.3.4 Agreements

The County's reclaimed water permit requires two types of written agreements to operate a reclaimed water program. At the City's request, the County can provide examples of these agreements used in other County reclaimed water projects.

7.3.4.1 Sale and Distribution Agreement

This agreement would be between the City and the County to ensure the sale and distribution system is operated as approved by Ecology and in accordance with the County's reclaimed water permit. The agreement will be for a specified term and includes the responsibilities of each party to ensure that all permit requirements are met, the volume of water anticipated to be sold, the wholesale rate(s) and any other special conditions agreed to by the parties. This agreement is typically negotiated between the City and County before the parties begin design of a project to ensure that all responsibilities and issues are clarified and agreed to at the outset.

7.3.4.2 End User Agreement

This agreement is between reclaimed water customers (end users) and the retailer, which in this case is anticipated to be the City. In some instances, the County may be party to the agreement, depending on the use and other conditions desired by Ecology and Health. This agreement describes the specific use of reclaimed water and customer requirements such as irrigation rates, signage, and training. It is basically a contract to ensure that the water is used appropriately and outlines the responsibilities of each party. It is also important to clearly describe the requirements related to payment for service. A standard agreement can be used for all customers with the ability to add site specific information.

Section 8: References

Beck, R.W. 2002. Economic Analysis of Reclaimed Water Distribution and Use. Prepared for LOTT Wastewater Alliance, pp. 3-1 – 3-11.

Cupps, K., and Morris, E. 2005. Case Studies in Reclaimed Water Use, Creating New Water Supplies Across Washington State. Washington State Department of Ecology, Publication Number 05-10-013. Olympia, WA.

Funding Work Group of the Puget Sound Partnership. 2006. Funding Update & Key Questions. Retrieved June 4, 2007 from http://www.pugetsoundpartnership.org/meetings/meetings/090706/FundingGroupReport090106.pdf

Hallam, N.B., Hua, F., West, J.R., Forster, C.F. and Sims, J. 2003. "Bulk Decay of Chlorine in Water Distribution Systems". Journal of Water Resources Planning and Management. Vol. 129, No 1, pp. 78-81.

HDR Engineering , Inc. 2008. Covington Water District and King County Reclaimed Water Feasibility Study (Phase 1) Final Report.

Radcliff, E. 2007. Reclaimed Water Survey. PowerPoint presentation. Washington State Department of Ecology.

Southwest Florida Water Management District. 1999. Reclaimed Water Guide.

Washington State Department of Community, Trade and Economic Development (CTEC). 2007. Washington 2008 State Action Plan: HUD Funds Administered by CTEC. Olympia, WA:

Washington State Department of Ecology (Ecology). 2000. Water Reclamation and Reuse: The Demonstration Projects. Ecology publication 00-10-062.

Appendix A: North Creek Pump Station Drawings and Schematics

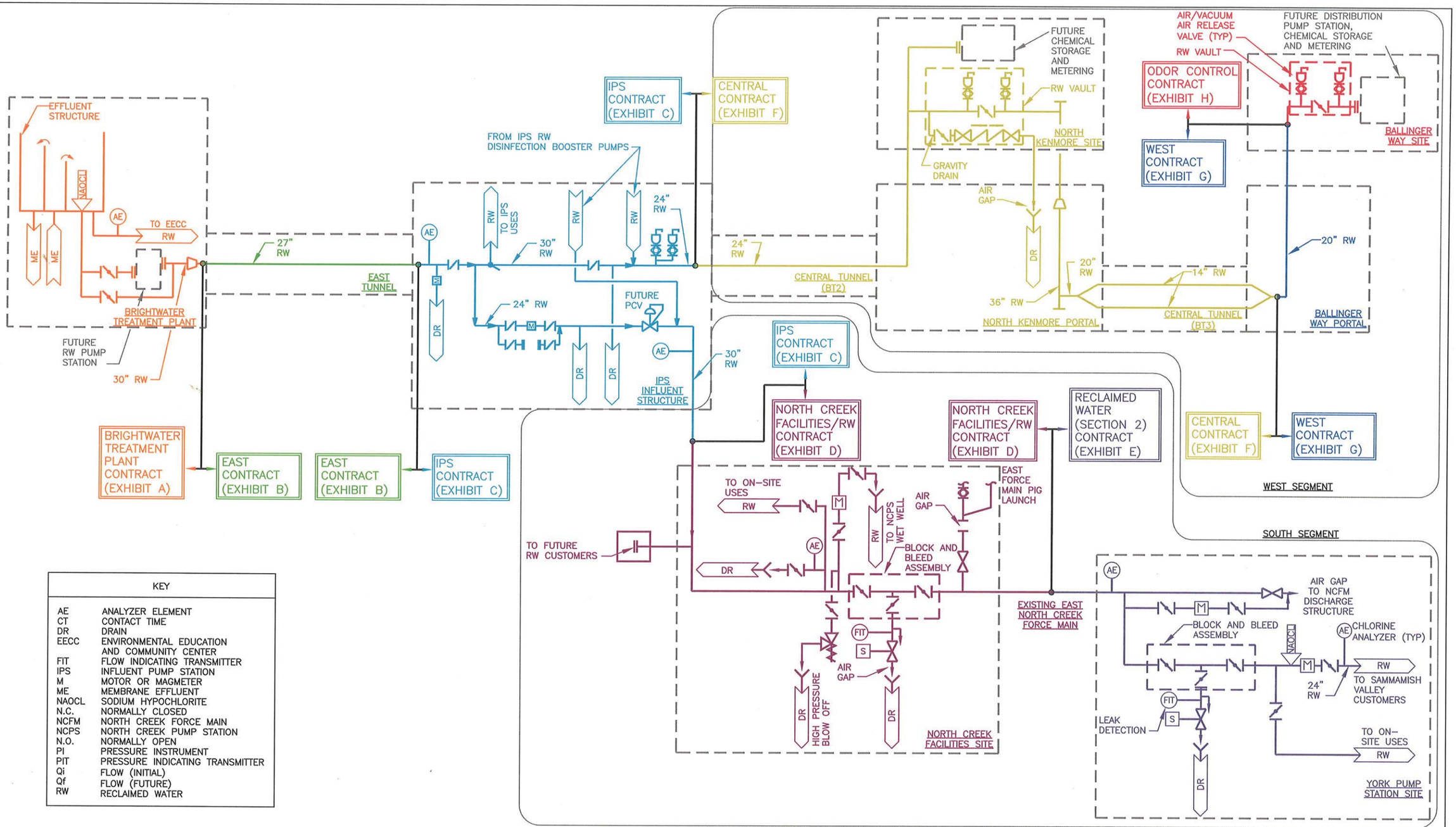

KEY	
AE	ANALYZER ELEMENT
CT	CONTACT TIME
DR	DRAIN
EECC	ENVIRONMENTAL EDUCATION AND COMMUNITY CENTER
FIT	FLOW INDICATING TRANSMITTER
IPS	INFLUENT PUMP STATION
M	MOTOR OR MAGMETER
ME	MEMBRANE EFFLUENT
NAOCL	SODIUM HYPOCHLORITE
N.C.	NORMALLY CLOSED
NCFM	NORTH CREEK FORCE MAIN
NCPS	NORTH CREEK PUMP STATION
N.O.	NORMALLY OPEN
PI	PRESSURE INSTRUMENT
PIT	PRESSURE INDICATING TRANSMITTER
Qi	FLOW (INITIAL)
Qf	FLOW (FUTURE)
RW	RECLAIMED WATER

NOTE: FOR SCHEMATIC PURPOSES ONLY. NOT ALL EQUIPMENT SHOWN.
REFER TO EACH CONTRACT PROCESS AND INSTRUMENTATION DIAGRAMS FOR DETAILED INFORMATION. ALL COMMUNICATIONS VIA BRIGHTWATER SYSTEM I & C COMMUNICATIONS LOOP.

RECLAIMED WATER SYSTEM SCHEMATIC
GENERAL OVERVIEW
KING COUNTY DEPARTMENT OF NATURAL RESOURCES & PARKS
05/11/09

carollo
Engineers...Working Wonders With Water™

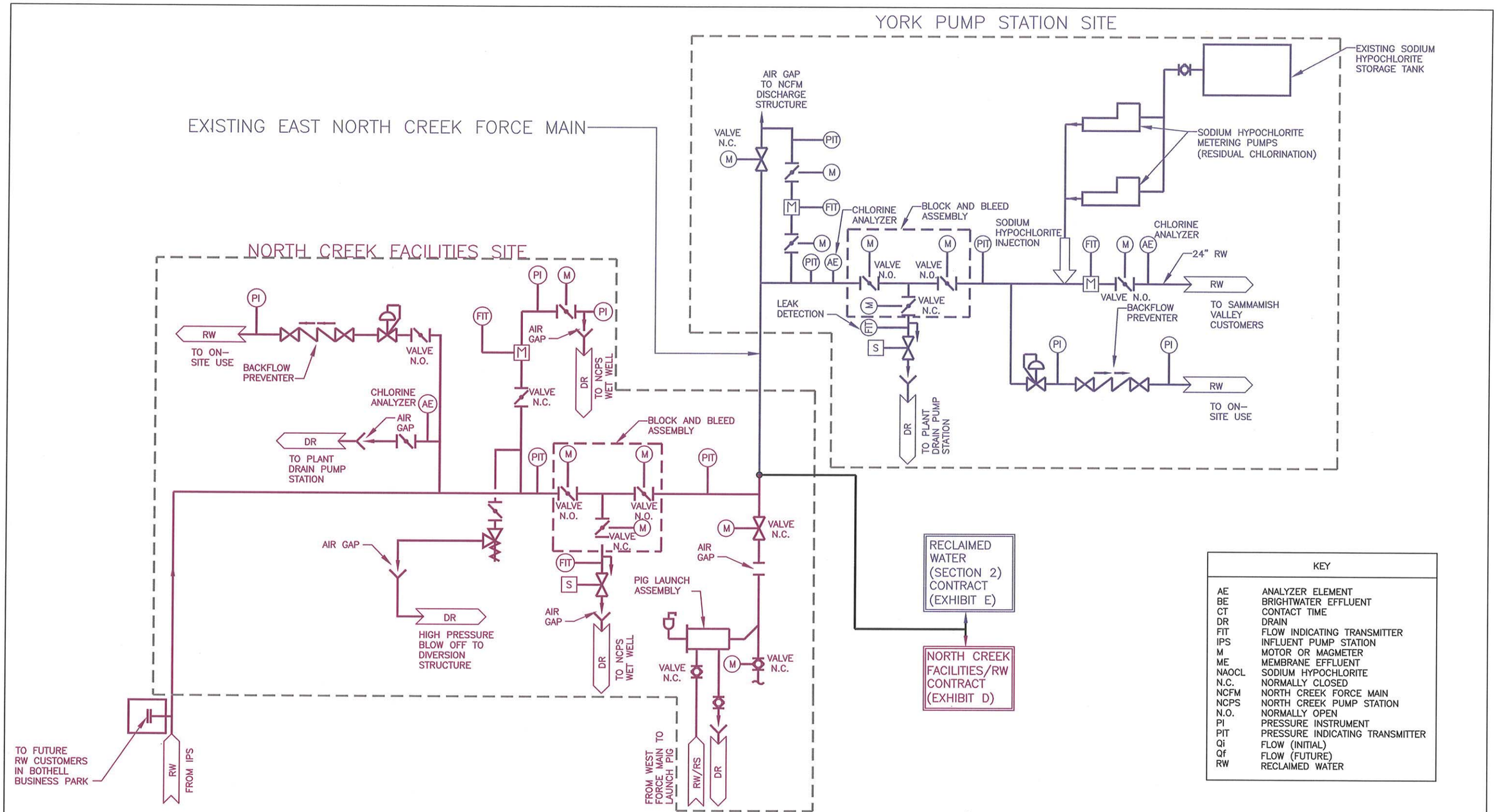

KEY	
AE	ANALYZER ELEMENT
BE	BRIGHTWATER EFFLUENT
CT	CONTACT TIME
DR	DRAIN
FIT	FLOW INDICATING TRANSMITTER
IPS	INFLUENT PUMP STATION
M	MOTOR OR MAGMETER
ME	MEMBRANE EFFLUENT
NAOCL	SODIUM HYPOCHLORITE
N.C.	NORMALLY CLOSED
NCFM	NORTH CREEK FORCE MAIN
NCPS	NORTH CREEK PUMP STATION
N.O.	NORMALLY OPEN
PI	PRESSURE INSTRUMENT
PIT	PRESSURE INDICATING TRANSMITTER
Qi	FLOW (INITIAL)
Qf	FLOW (FUTURE)
RW	RECLAIMED WATER

NOTE: FOR SCHEMATIC PURPOSES ONLY. NOT ALL EQUIPMENT SHOWN.
REFER TO EACH CONTRACT PROCESS AND INSTRUMENTATION DIAGRAMS FOR DETAILED INFORMATION. ALL COMMUNICATIONS VIA BRIGHTWATER SYSTEM I & C COMMUNICATIONS LOOP.

RECLAIMED WATER SYSTEM SCHEMATIC
SOUTH SEGMENT (BRIGHTWATER IPS TO SAMMAMISH VALLEY CUSTOMERS)
KING COUNTY DEPARTMENT OF
NATURAL RESOURCES & PARKS
05/11/09

GENERAL NOTES:

1. DRAWING BACKGROUND FROM KCDNRP AS-BUILTS, NORTH CREEK DIVERSION PROJECT, NORTH CREEK PUMPING STATION, KCM & ASSOCIATED FIRMS, BROWN AND CALDWELL, MARCH 1997.

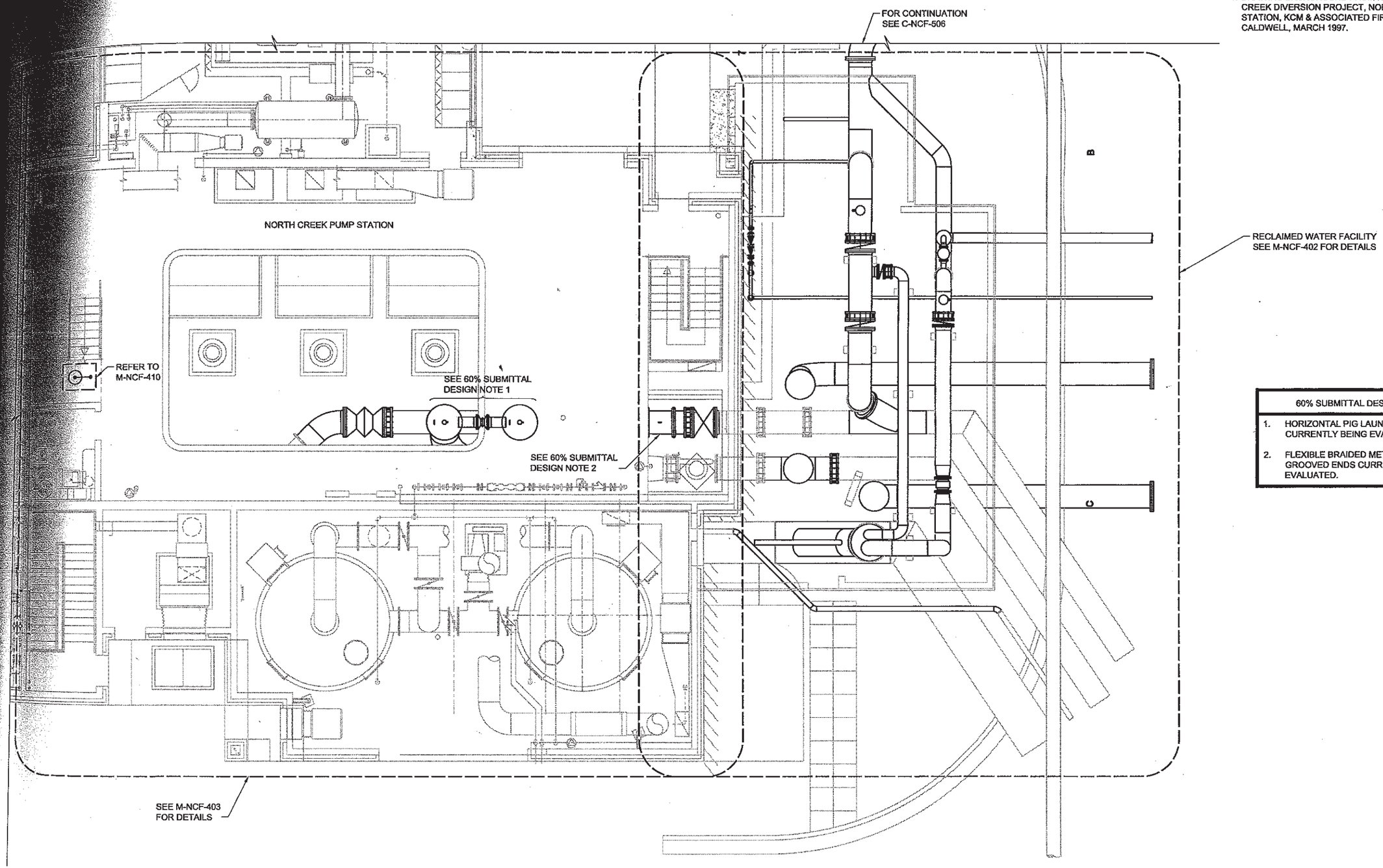

60% SUBMITTAL DESIGN NOTES:	
1.	HORIZONTAL PIG LAUNCH CONFIGURATION CURRENTLY BEING EVALUATED.
2.	FLEXIBLE BRAIDED METAL SPOOL PIECE W/ GROOVED ENDS CURRENTLY BEING EVALUATED.

ONE INCH
AT FULL SIZE, IF NOT ONE INCH SCALE ACCORDINGLY

REVISION	BY	APP'D	DATE

MWH
JACOBS ASSOCIATES
A Joint Venture

carollo engineers

60% SUBMITTAL

DESIGNED:	CHECKED:
S. SCHUYLER	Sarah Fraker
DRAWN: SEF	SCALE: 3/16" = 1'-0"
DESIGN ACCEPTANCE:	CONTRACT NO:
PROJECT ACCEPTANCE:	BID PACKAGE NO: 7

King County

DEPARTMENT OF NATURAL RESOURCES & PARKS
BRIGHTWATER CONVEYANCE SYSTEM
NORTH CREEK FACILITIES CONTRACT

RECLAIMED WATER FACILITY
GROUND LEVEL MECHANICAL PLAN

DATE: NOV 2005
FILE NAME: 7-M-NCF-1008.dwg
DRAWING NO: M-NCF-401
SHEET NO: 80 OF 173

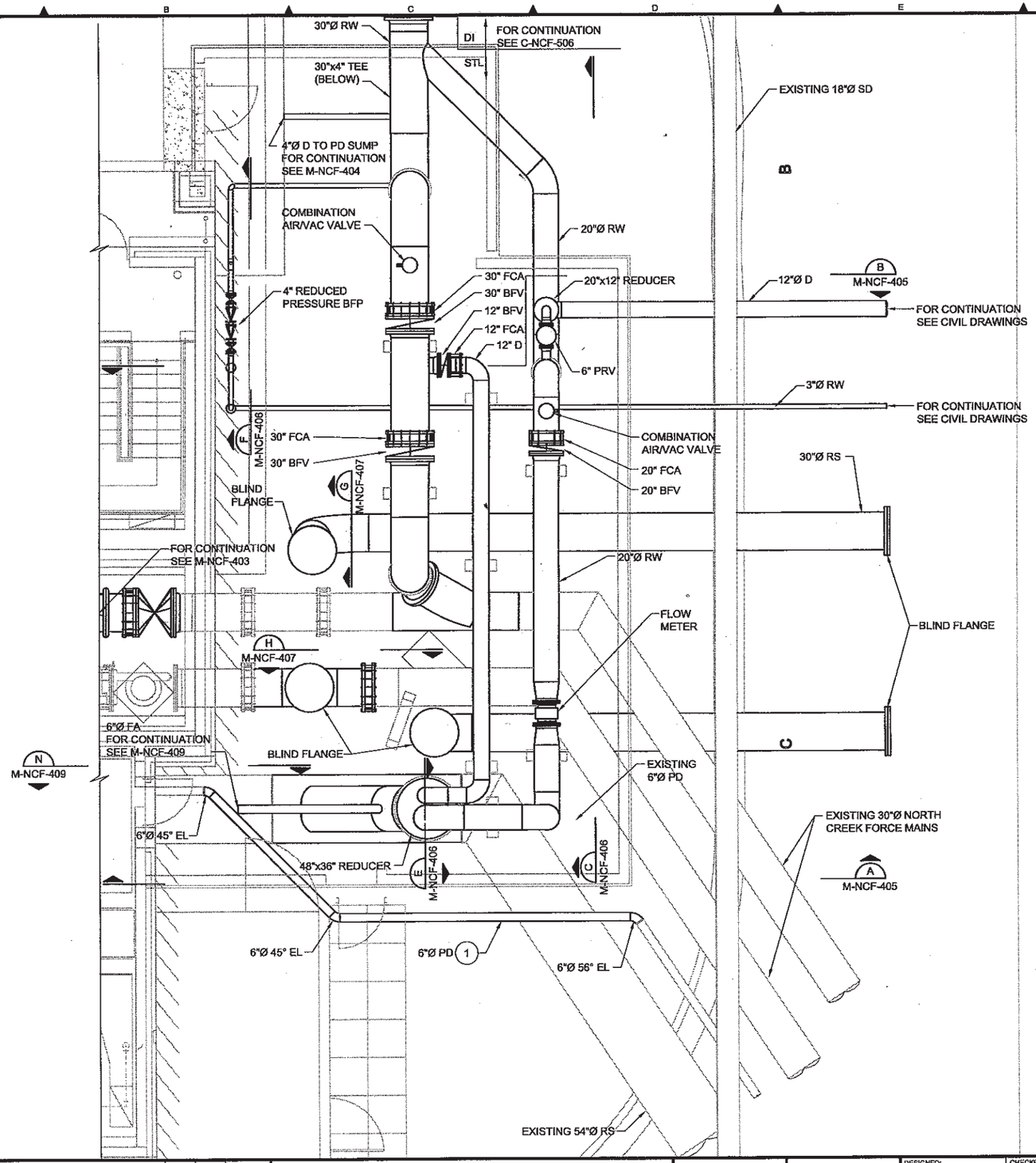

GENERAL NOTES:

1. DRAWING BACKGROUND FROM KCDNRP AS-BUILTS, NORTH CREEK DIVERSION PROJECT, NORTH CREEK PUMPING STATION, KCM & ASSOCIATED FIRMS, BROWN AND CALDWELL, MARCH 1997.

KEY NOTES:

(1) REROUTE EXISTING 6"Ø PD AS SHOWN TO AVOID NEW RECLAIMED WATER FACILITY PIPING.

ONE INCH
AT FULL SIZE, IF NOT ONE INCH SCALE ACCORDINGLY

REVISION	BY	APP'D	DATE

MWH
JACOBS ASSOCIATES
A Joint Venture

carollo engineers

60% SUBMITTAL

DESIGNED: S. SCHUYLER	CHECKED: Sarah Fraker
DRAWN: SEF	SCALE: 1/4" = 1'-0"
DESIGN ACCEPTANCE:	CONTRACT NO:
PROJECT ACCEPTANCE:	BID PACKAGE NO: 7

King County

DEPARTMENT OF NATURAL RESOURCES & PARKS
BRIGHTWATER CONVEYANCE SYSTEM
NORTH CREEK FACILITIES CONTRACT

RECLAIMED WATER FACILITY
MECHANICAL PLAN

DATE: NOV 2005
FILE NAME: 7-M-NCF-1009.dwg
DRAWING NO: M-NCF-402
SHEET NO: 81 OF 173

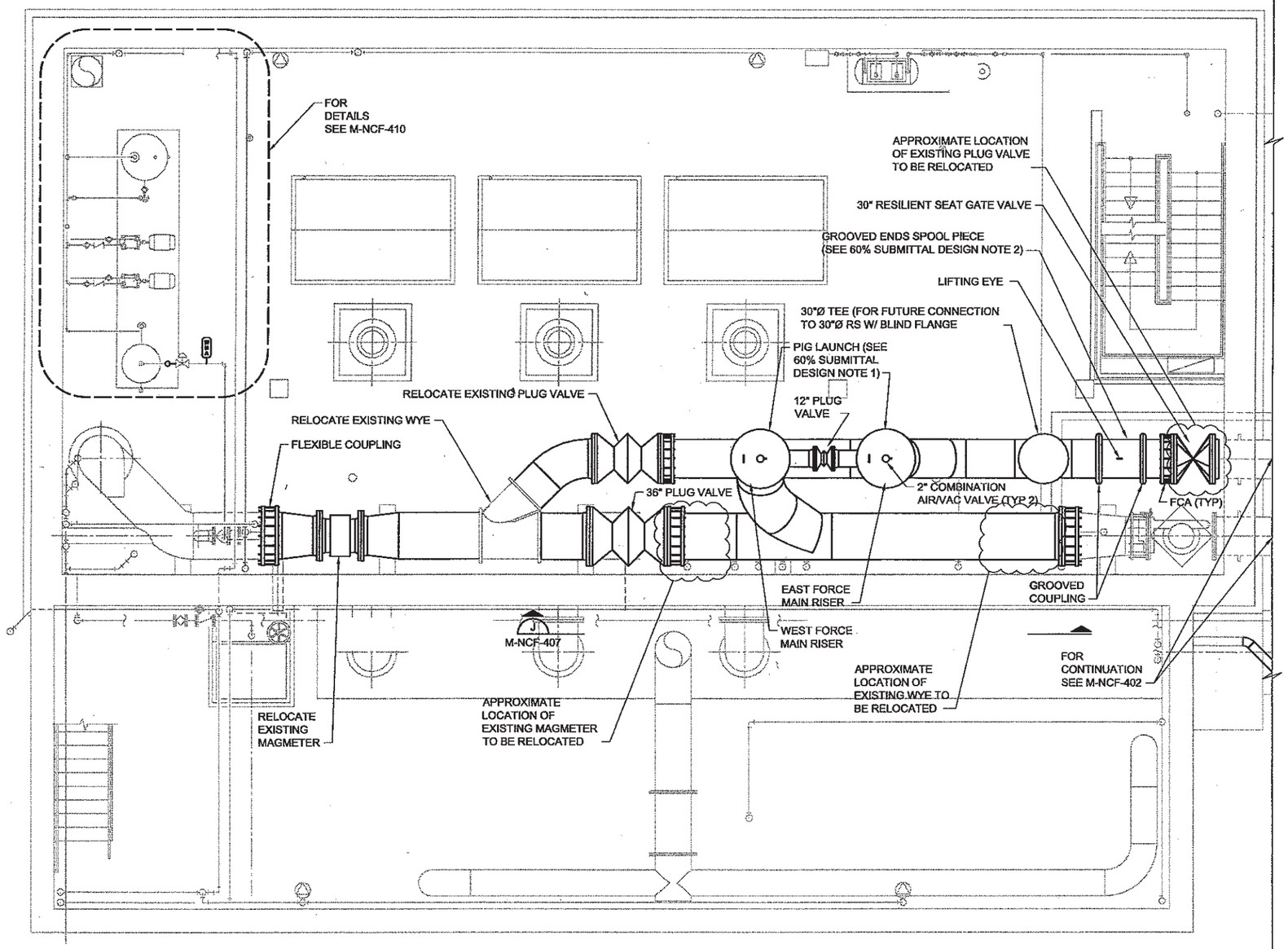

GENERAL NOTES:

1. DRAWING BACKGROUND FROM KCDNRP AS-BUILTS, NORTH CREEK DIVERSION PROJECT, NORTH CREEK PUMPING STATION, KCM & ASSOCIATED FIRMS, BROWN AND CALDWELL, MARCH 1997.

60% SUBMITTAL DESIGN NOTES:
1. HORIZONTAL PIG LAUNCH CONFIGURATION CURRENTLY BEING EVALUATED.
2. FLEXIBLE BRAIDED METAL SPOOL PIECE W/ GROOVED ENDS CURRENTLY BEING EVALUATED.
3. ALTERNATE LAYOUT UTILIZING 30"Ø PIPE AND APPURTENANCES IN LIEU OF 36"Ø CURRENTLY BEING EVALUATED.

ONE INCH
AT FULL SIZE, IF NOT ONE INCH SCALE ACCORDINGLY

REVISION	BY	APP'D	DATE

MWH
JACOBS ASSOCIATES
A Joint Venture

carollo engineers

60% SUBMITTAL

DESIGNED: S. SCHUYLER	CHECKED: Sarah Fraker
DRAWN: SEF	SCALE: 1/4" = 1'-0"
DESIGN ACCEPTANCE:	CONTRACT NO:
PROJECT ACCEPTANCE:	BID PACKAGE NO: 7

King County

DEPARTMENT OF NATURAL RESOURCES & PARKS
BRIGHTWATER CONVEYANCE SYSTEM
NORTH CREEK FACILITIES CONTRACT

NORTH CREEK PUMP STATION
MOTOR ROOM MODIFICATIONS PLAN

DATE: NOV 2005
FILE NAME: 7-M-NCF-1010.dwg
DRAWING NO: M-NCF-403
SHEET NO: 82 OF 173

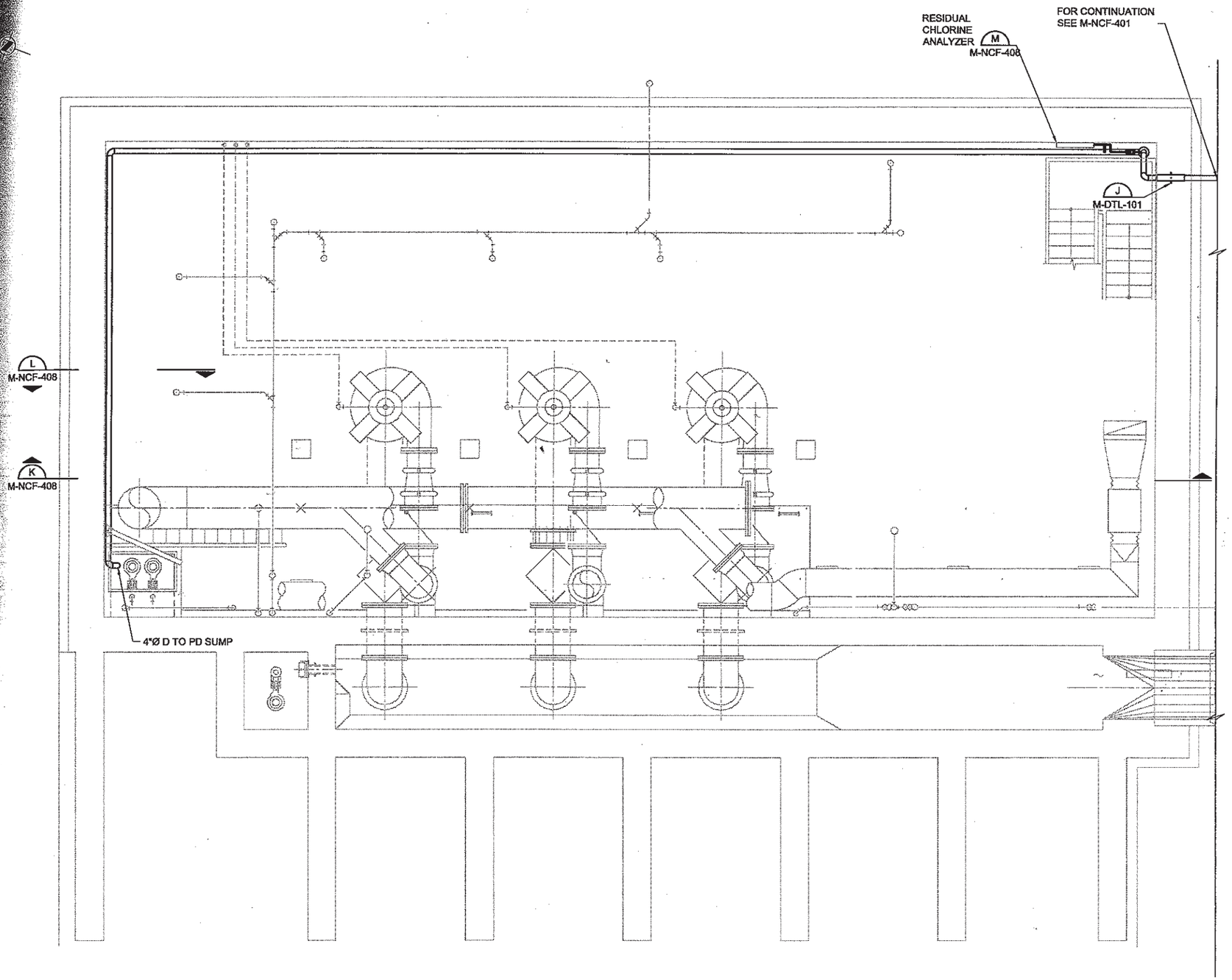

GENERAL NOTES:

1. DRAWING BACKGROUND FROM KCDNRP AS-BUILTS, NORTH CREEK DIVERSION PROJECT, NORTH CREEK PUMPING STATION, KCM & ASSOCIATED FIRMS, BROWN AND CALDWELL, MARCH 1997.

ONE INCH
AT FULL SIZE, IF NOT ONE INCH SCALE ACCORDINGLY

REVISION	BY	APP'D	DATE

MWH
JACOBS ASSOCIATES
A Joint Venture

carollo engineers

60% SUBMITTAL

DESIGNED: S. SCHUYLER	CHECKED: Sarah Fraker
DRAWN: SEF	SCALE: 1/4" = 1'-0"
DESIGN ACCEPTANCE:	CONTRACT NO:
PROJECT ACCEPTANCE:	BID PACKAGE NO: 7

King County

DEPARTMENT OF NATURAL RESOURCES & PARKS
BRIGHTWATER CONVEYANCE SYSTEM
NORTH CREEK FACILITIES CONTRACT

NORTH CREEK PUMP STATION
PUMP ROOM MODIFICATIONS PLAN

DATE: NOV 2005
FILE NAME: 7-M-NCF-1011.dwg
DRAWING NO: M-NCF-404
SHEET NO: 83 OF 173

GENERAL NOTES:

1. DRAWING BACKGROUND FROM KCDNRP AS-BUILTS, NORTH CREEK DIVERSION PROJECT, NORTH CREEK PUMPING STATION, KCM & ASSOCIATED FIRMS, BROWN AND CALDWELL, MARCH 1997.

60% SUBMITTAL DESIGN NOTES:

1. STRUCTURAL SECTIONS CURRENTLY BEING DEVELOPED.
2. MANHOLE TEE DESIGN CURRENTLY BEING EVALUATED TO REPLACE WYE CONNECTION TO 54"Ø RS. 6"Ø FA WOULD MOVE CLOSER TO SURFACE.

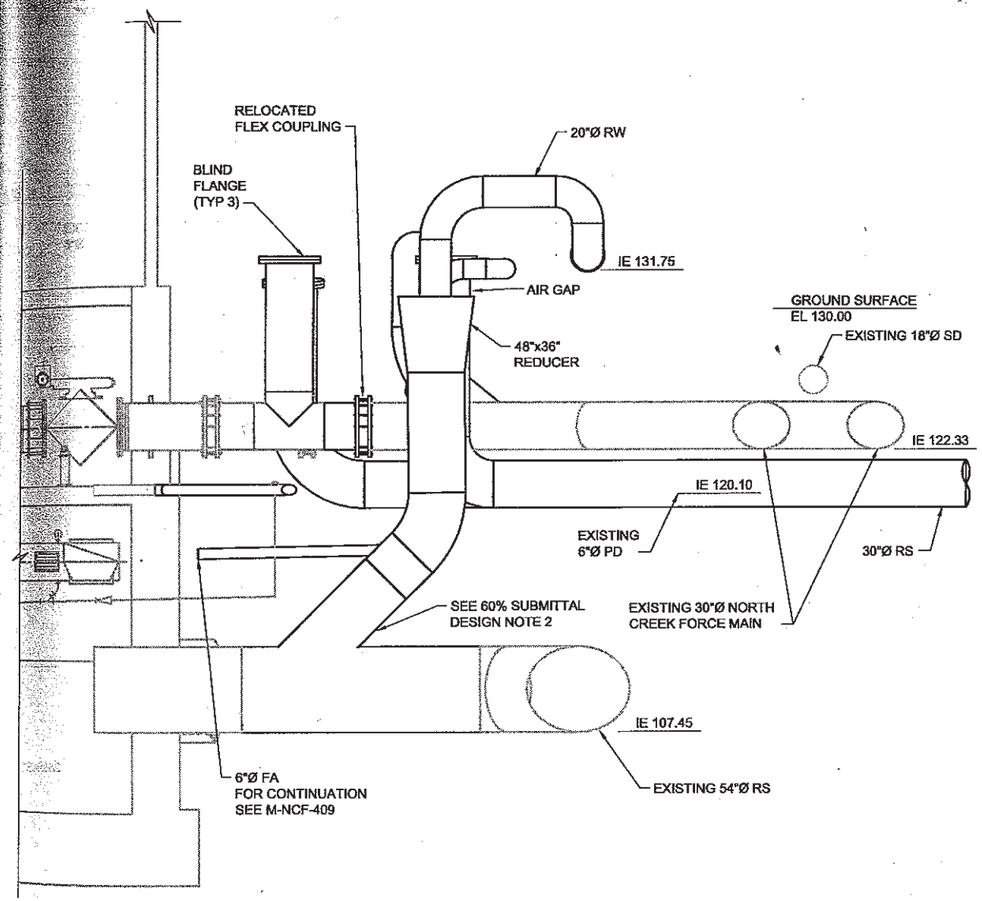

TIE-IN

SECTION A M-NCF-402

SCALE: 1/4" = 1'-0"

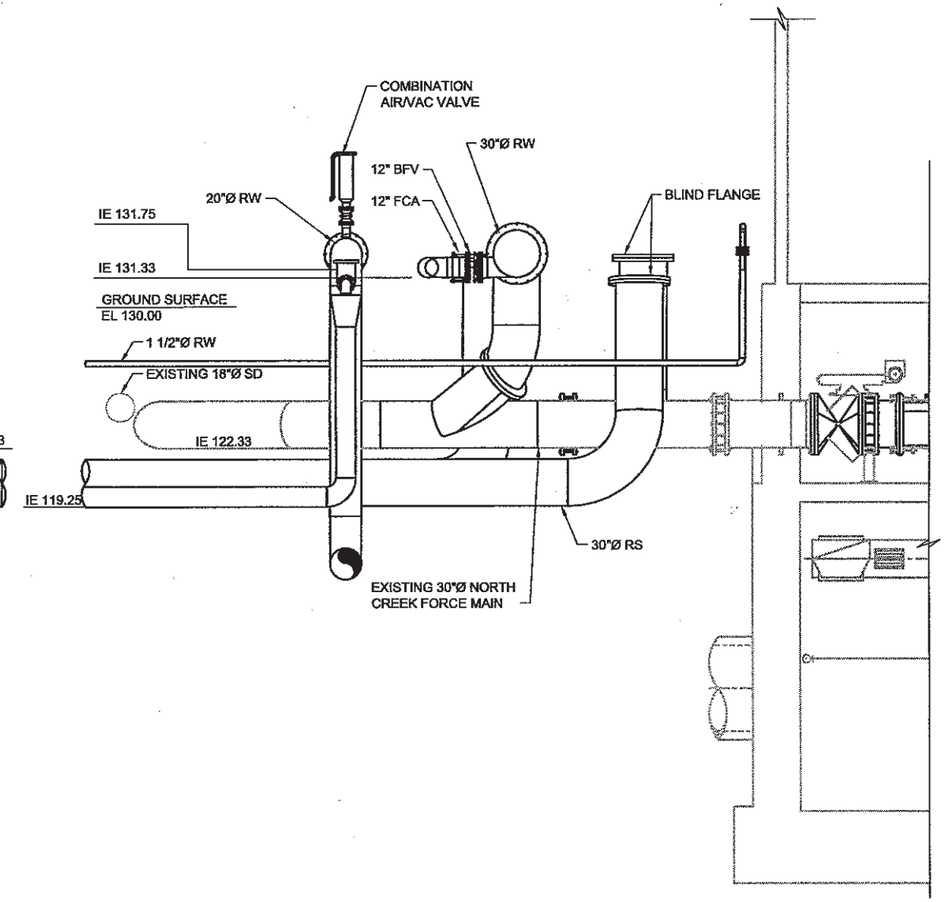

TIE-IN

SECTION B M-NCF-402

SCALE: 1/4" = 1'-0"

ONE INCH

AT FULL SIZE, IF NOT ONE INCH SCALE ACCORDINGLY

REVISION	BY	APP'D	DATE

MWH JACOBS ASSOCIATES A Joint Venture

carollo engineers

60% SUBMITTAL

DESIGNED: S. SCHUYLER	CHECKED: Sarah Fraker
DRAWN: SEF	SCALE: AS NOTED
DESIGN ACCEPTANCE:	CONTRACT NO:
PROJECT ACCEPTANCE:	BID PACKAGE NO: 7

King County

DEPARTMENT OF NATURAL RESOURCES & PARKS
BRIGHTWATER CONVEYANCE SYSTEM
NORTH CREEK FACILITIES CONTRACT

RECLAIMED WATER FACILITY
SECTIONS-1

DATE: NOV 2005
FILE NAME: 7-M-NCF-1012.dwg
DRAWING NO: M-NCF-405
SHEET NO: 84 OF 173

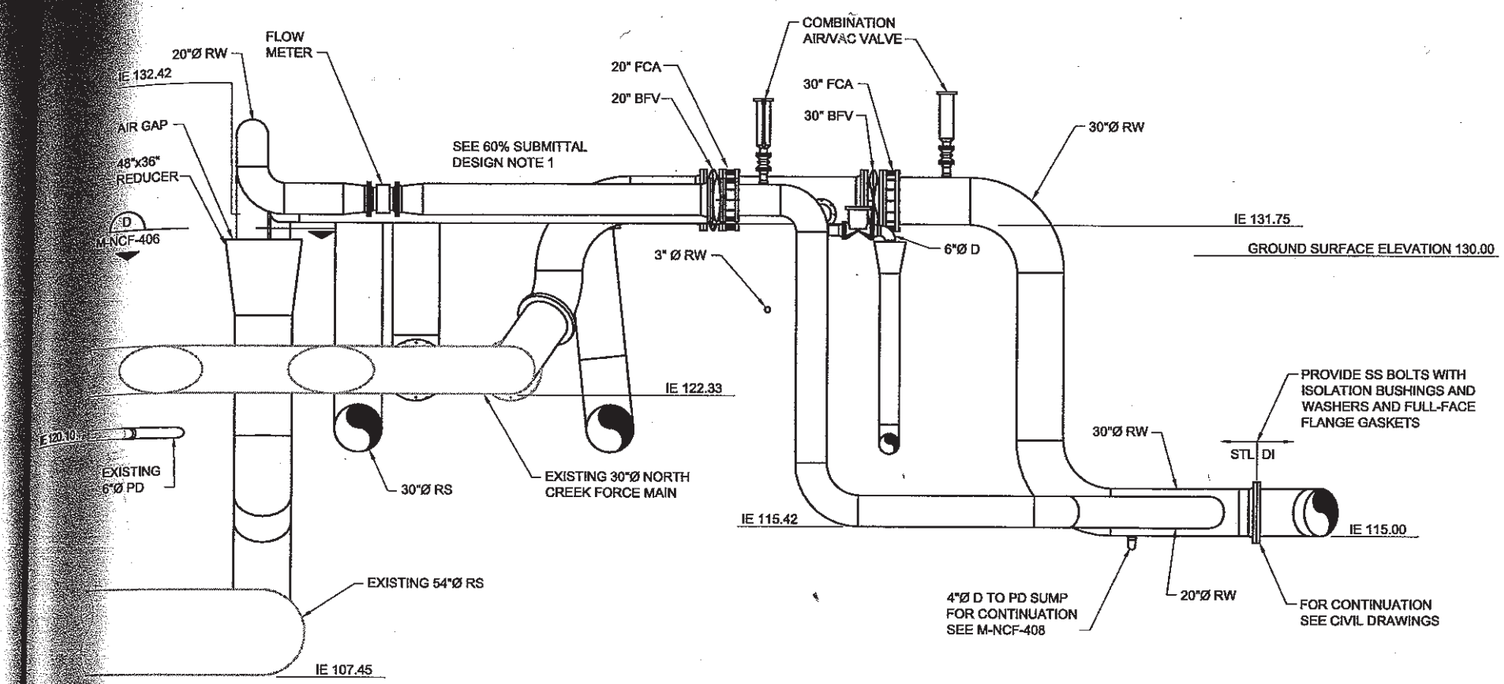

SECTION C M-NCF-402
SCALE: 1/4" = 1'-0"

60% SUBMITTAL DESIGN NOTES:

1. STRUCTURAL SECTIONS CURRENTLY BEING DEVELOPED.
2. UTILITY WATER ROUTING CURRENTLY BEING EVALUATED.

TIE-IN

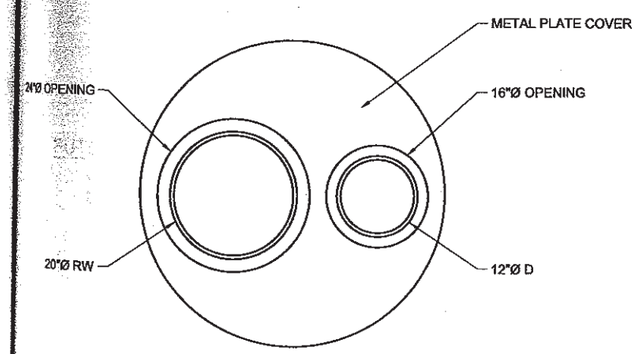

SECTION D M-NCF-406
SCALE: 1" = 1'-0"

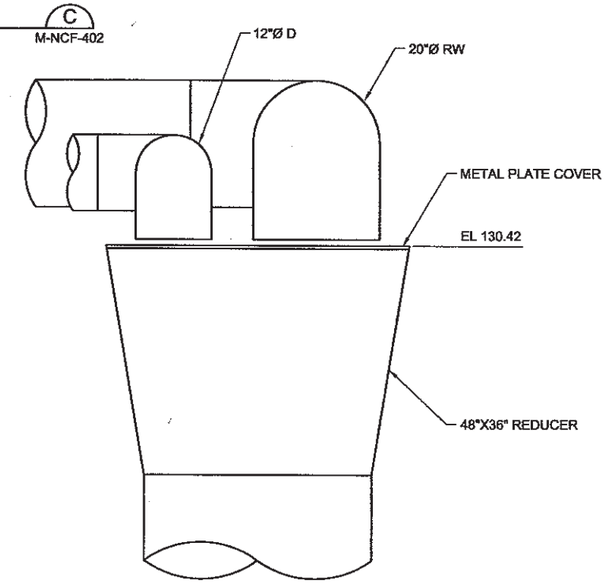

SECTION E M-NCF-402
SCALE: 1" = 1'-0"

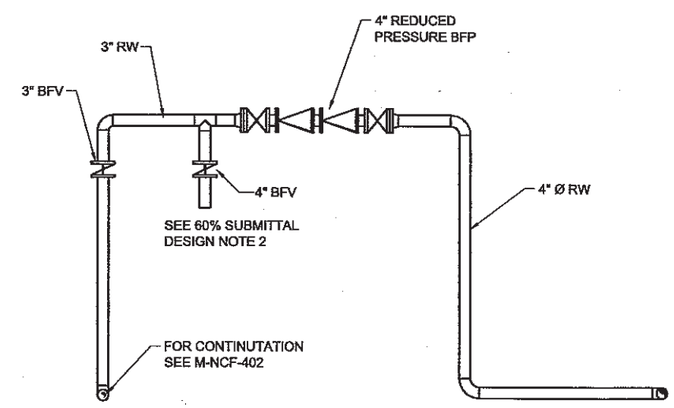

SECTION F M-NCF-402
SCALE: 1/2" = 1'-0"

ONE INCH
AT FULL SIZE, IF NOT ONE INCH SCALE ACCORDINGLY

REVISION	BY	APP'D	DATE

MWH
JACOBS ASSOCIATES
A Joint Venture

carollo engineers

60% SUBMITTAL

DESIGNED: S. SCHUYLER	CHECKED: Sarah Fraker
DRAWN: SEF	SCALE: AS NOTED
DESIGN ACCEPTANCE:	CONTRACT NO:
PROJECT ACCEPTANCE:	BID PACKAGE NO: 7

King County

DEPARTMENT OF NATURAL RESOURCES & PARKS
BRIGHTWATER CONVEYANCE SYSTEM
NORTH CREEK FACILITIES CONTRACT

RECLAIMED WATER FACILITY
SECTIONS-2

DATE: NOV 2005
FILE NAME: 7-M-NCF-1013.dwg
DRAWING NO: M-NCF-406
SHEET NO: 85 OF 173

60% SUBMITTAL DESIGN NOTES:

STRUCTURAL SECTIONS CURRENTLY BEING DEVELOPED.

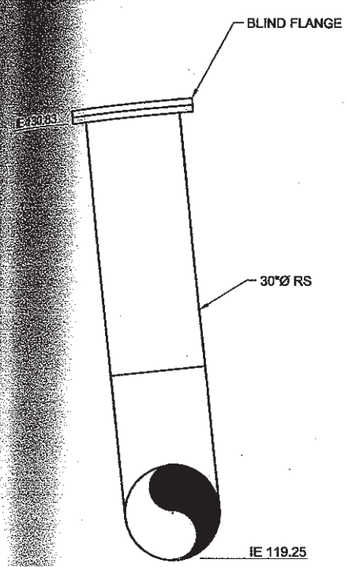

FUTURE 30"Ø RS CONNECTION

SECTION G

SCALE: 1/2" = 1'-0" M-NCF-402

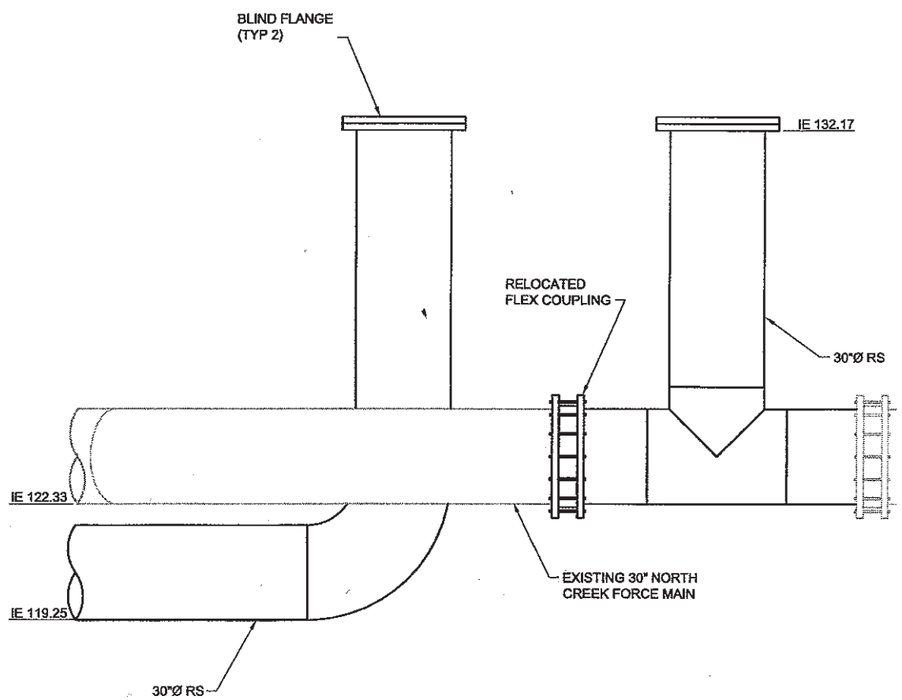

FUTURE 30"Ø RS CONNECTION

SECTION H

SCALE: 1/2" = 1'-0" M-NCF-402

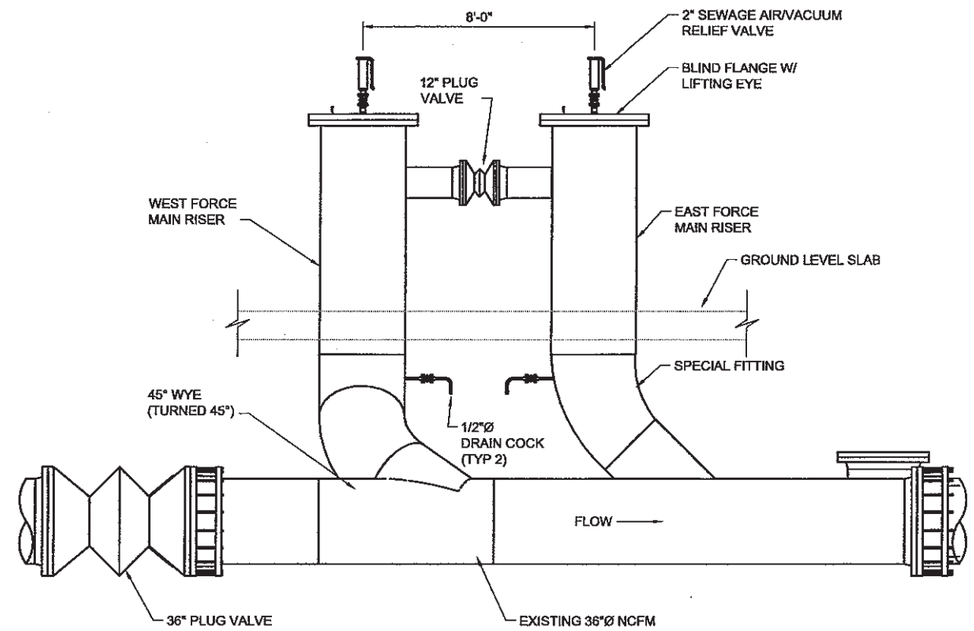

60% SUBMITTAL DESIGN NOTES:

HORIZONTAL PIG LAUNCH CONFIGURATION CURRENTLY BEING EVALUATED.

PIGGING STATION

SECTION J

SCALE: 3/8" = 1'-0" M-NCF-403

ONE INCH

AT FULL SIZE, IF NOT ONE INCH SCALE ACCORDINGLY

REVISION	BY	APP'D	DATE

MWH JACOBS ASSOCIATES
A Joint Venture

carollo engineers

60% SUBMITTAL

DESIGNED: S. SCHUYLER	CHECKED: Sarah Fraker
DRAWN: SEF	SCALE: AS NOTED
DESIGN ACCEPTANCE:	CONTRACT NO:
PROJECT ACCEPTANCE:	BID PACKAGE NO: 7

King County

DEPARTMENT OF NATURAL RESOURCES & PARKS
BRIGHTWATER CONVEYANCE SYSTEM
NORTH CREEK FACILITIES CONTRACT

RECLAIMED WATER FACILITY
SECTIONS-3

DATE: NOV 2005

FILE NAME: 7-M-NCF-1014.dwg

DRAWING NO: M-NCF-407

SHEET NO: 86 OF 173

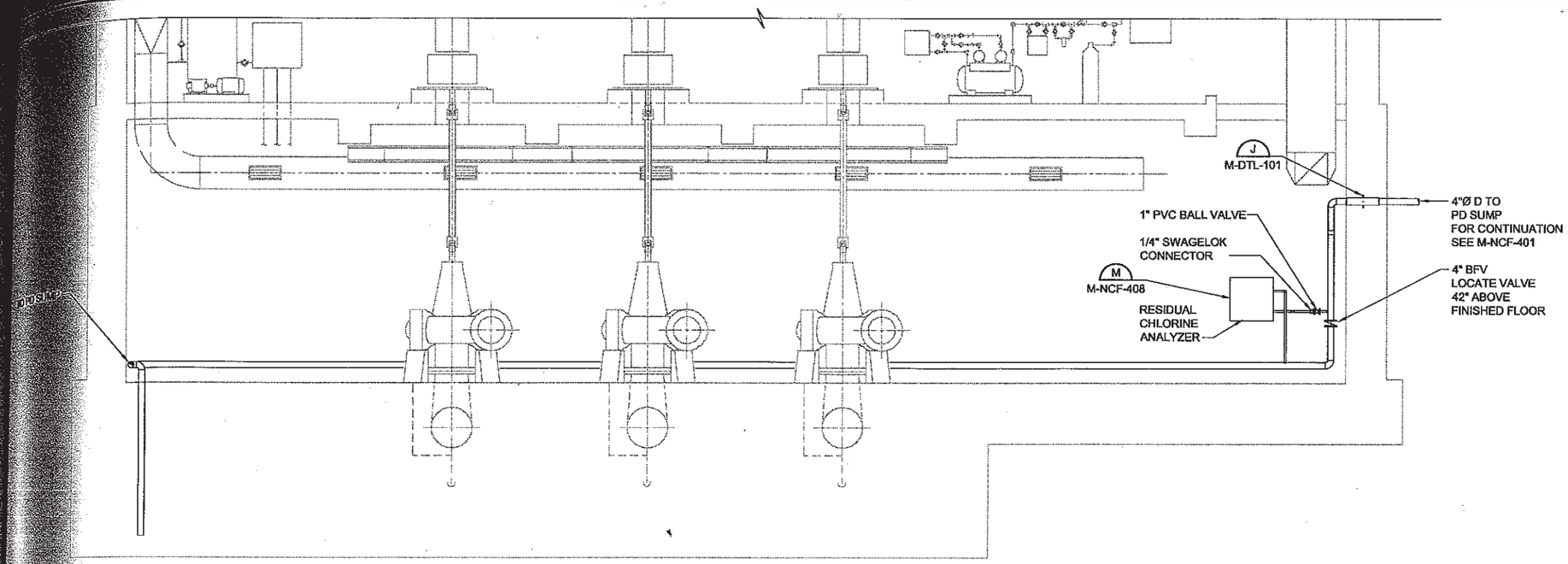

SECTION (K) M-NCF-404
SCALE: 1/4" = 1'-0"

GENERAL NOTES:

1. DRAWING BACKGROUND FROM KCDNRP AS-BUILTS, NORTH CREEK DIVERSION PROJECT, NORTH CREEK PUMPING STATION, KCM & ASSOCIATED FIRMS, BROWN AND CALDWELL, MARCH 1997.

KEY NOTES:

(1) PLATE SHALL BE MOUNTED TO 1 1/2" SQ PREFORMED GALVANIZED STEEL CHANNEL ANCHORED TO WALL.

(2) INSTALLATION SHALL INCLUDE ALL HARDWARE REQUIRED FOR EQUIPMENT AND PIPE MOUNTING.

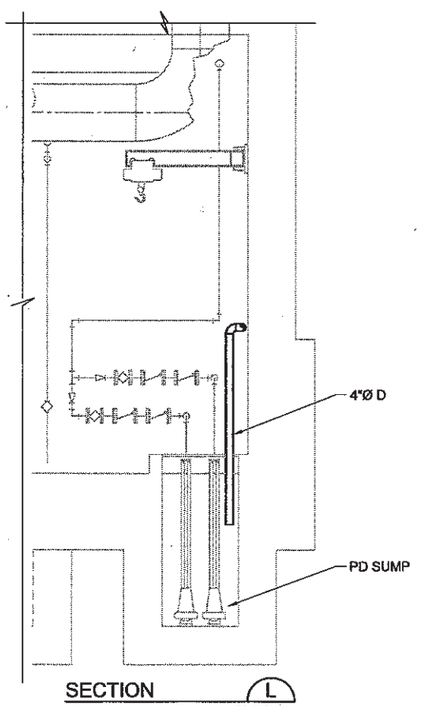

SECTION (L) M-NCF-404
SCALE: 1/4" = 1'-0"

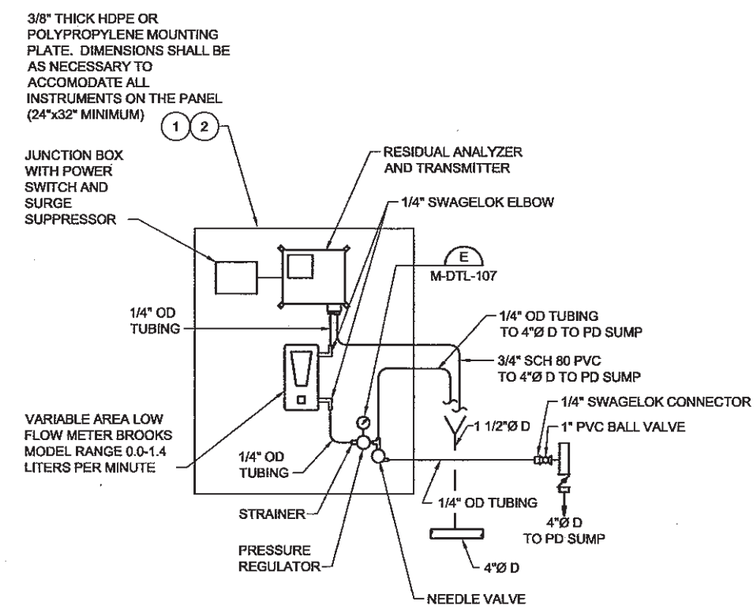

RESIDUAL CHLORINE ANALYZER

DETAIL (M) M-NCF-408
SCALE: NONE

ONE INCH
AT FULL SIZE, IF NOT ONE INCH SCALE ACCORDINGLY

REVISION	BY	APP'D	DATE

MWH
JACOBS ASSOCIATES
A Joint Venture

carollo engineers

60% SUBMITTAL

DESIGNED: S. SCHUYLER	CHECKED: Sarah Fraker
DRAWN: SEF	SCALE: AS NOTED
DESIGN ACCEPTANCE:	CONTRACT NO:
PROJECT ACCEPTANCE:	BID PACKAGE NO: 7

King County

DEPARTMENT OF NATURAL RESOURCES & PARKS
BRIGHTWATER CONVEYANCE SYSTEM
NORTH CREEK FACILITIES CONTRACT

NORTH CREEK PUMP STATION
PUMP ROOM MODIFICATIONS
SECTIONS

DATE: NOV 2005
FILE NAME: 7-M-NCF-1015.dwg
DRAWING NO: M-NCF-408
SHEET NO: 87 OF 173

GENERAL NOTES:

1. DRAWING BACKGROUND FROM KCDNRP AS-BUILTS, NORTH CREEK DIVERSION PROJECT, NORTH CREEK PUMPING STATION, KCM & ASSOCIATED FIRMS, BROWN AND CALDWELL, MARCH 1997.

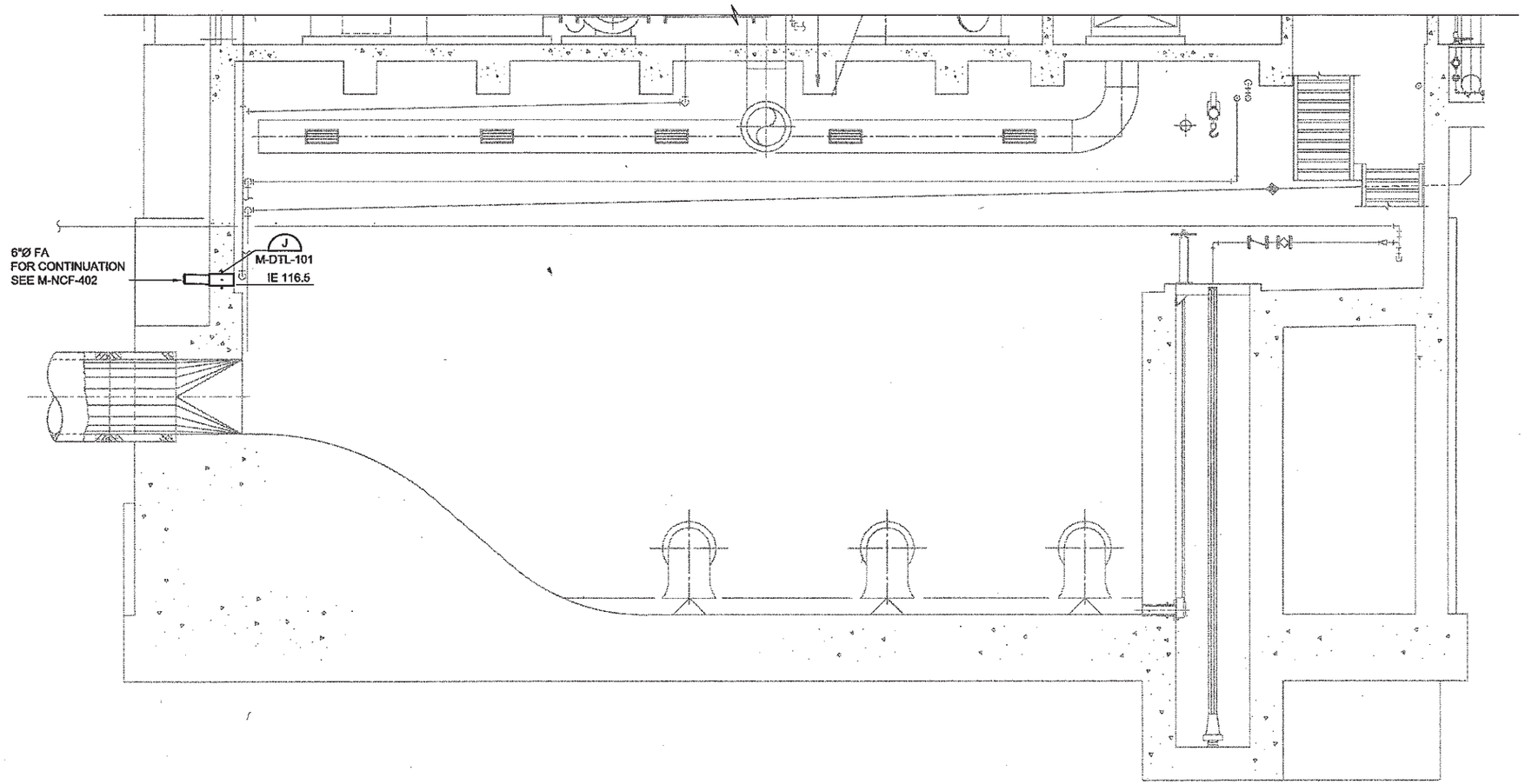

SECTION N
SCALE: 1/4" = 1'-0" M-NCF-402

ONE INCH
AT FULL SIZE, IF NOT ONE INCH SCALE ACCORDINGLY

REVISION	BY	APP'D	DATE

MWH
JACOBS ASSOCIATES
A Joint Venture

carollo engineers

60% SUBMITTAL

DESIGNED: S. SCHUYLER	CHECKED: Sarah Fraker
DRAWN: SEF	SCALE: AS NOTED
DESIGN ACCEPTANCE:	CONTRACT NO:
PROJECT ACCEPTANCE:	BID PACKAGE NO: 7

King County

DEPARTMENT OF NATURAL RESOURCES & PARKS
BRIGHTWATER CONVEYANCE SYSTEM
NORTH CREEK FACILITIES CONTRACT

NORTH CREEK PUMP STATION WET WELL MODIFICATIONS SECTIONS

DATE: NOV 2005
FILE NAME: 7-M-NCF-1016.dwg
DRAWING NO: M-NCF-409
SHEET NO: 88 OF 173

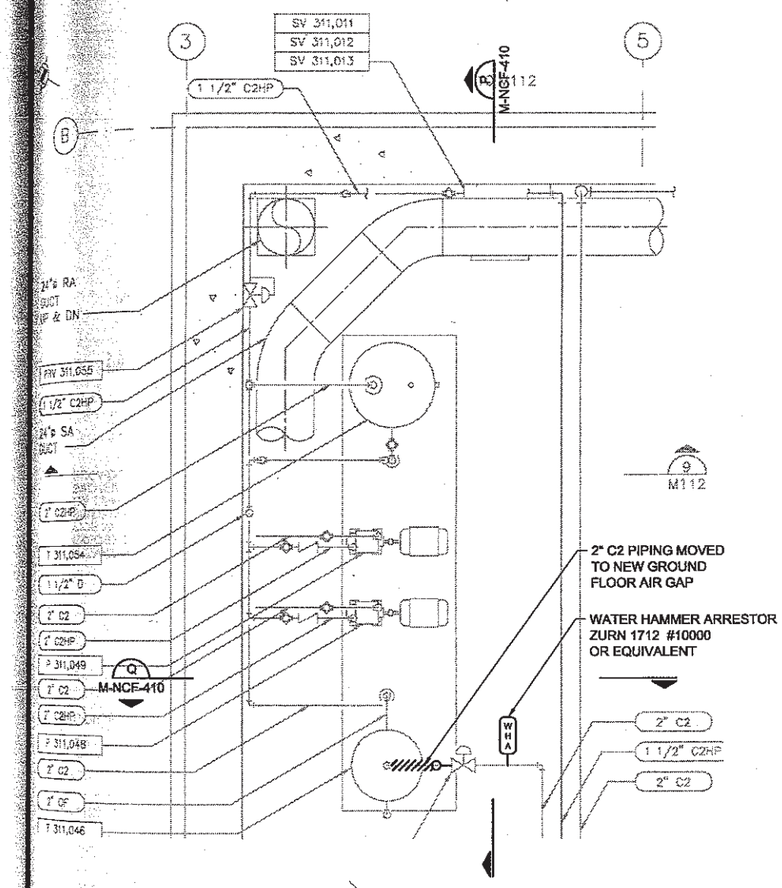

PARTIAL PLAN
SCALE: 3/8"=1'-0"

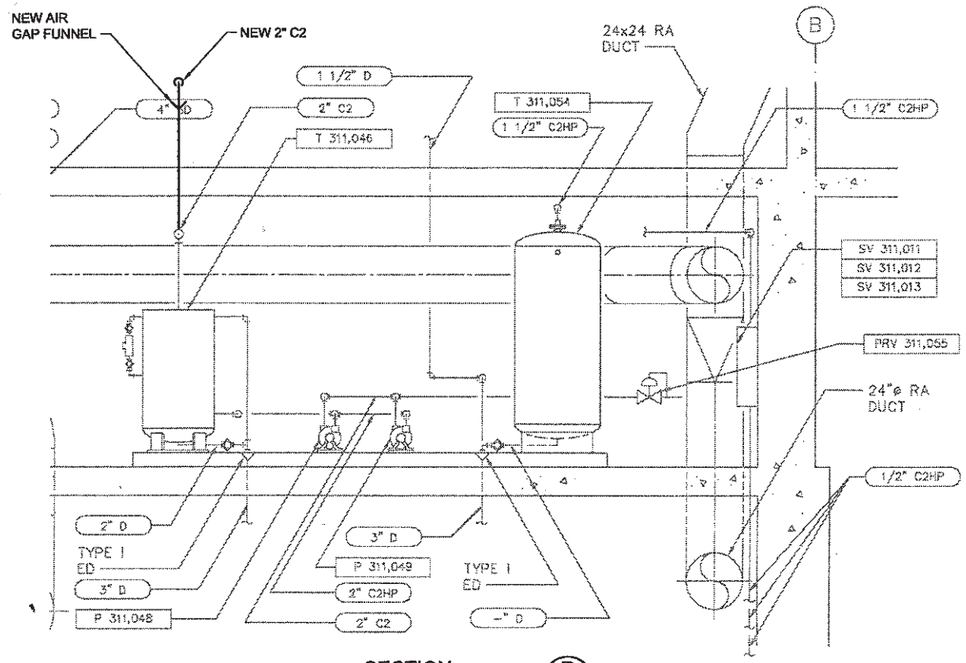

SECTION P M-NCF-410
SCALE: 3/8" = 1'-0"

GENERAL NOTES:

1. DRAWING BACKGROUND FROM KCDNRP AS-BUILTS, NORTH CREEK DIVERSION PROJECT, NORTH CREEK PUMPING STATION, KCM & ASSOCIATED FIRMS, BROWN AND CALDWELL, MARCH 1997.

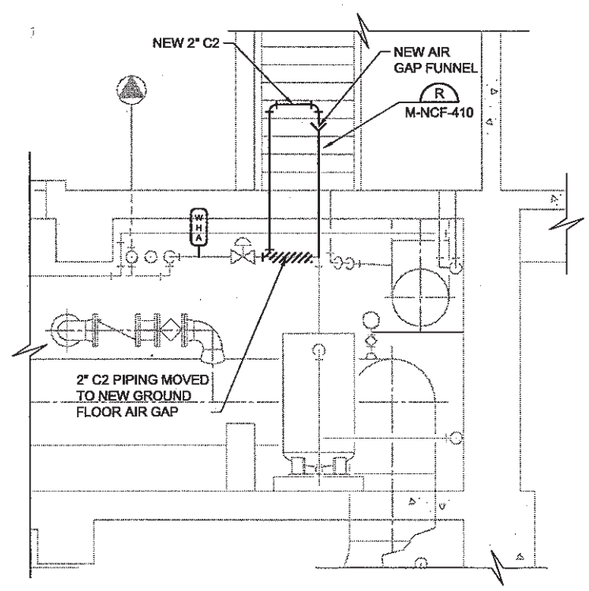

SECTION Q M-NCF-410
SCALE: 3/8" = 1'-0"

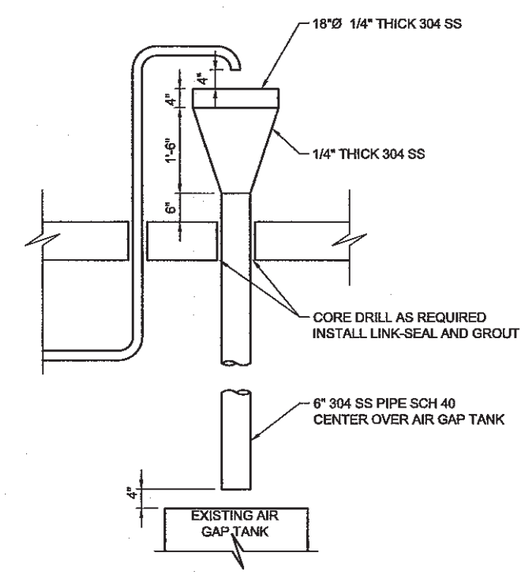

DETAIL R M-NCF-410
SCALE: 3/4" = 1'-0"

ONE INCH
AT FULL SIZE, IF NOT ONE INCH SCALE ACCORDINGLY

REVISION	BY	APP'D	DATE

MWH
JACOBS ASSOCIATES
A Joint Venture

carollo engineers

60% SUBMITTAL

DESIGNED:	CHECKED:
DRAWN: SEF	SCALE: AS NOTED
DESIGN ACCEPTANCE:	CONTRACT NO:
PROJECT ACCEPTANCE:	BID PACKAGE NO: 7

King County

DEPARTMENT OF NATURAL RESOURCES & PARKS
BRIGHTWATER CONVEYANCE SYSTEM
NORTH CREEK FACILITIES CONTRACT

NORTH CREEK PUMP STATION
UTILITY WATER SYSTEM
PLAN AND SECTIONS

DATE: NOV 2005
FILE NAME: 7-M-NCF-1017.dwg
DRAWING NO: M-NCF-410
SHEET NO: 89 OF 173

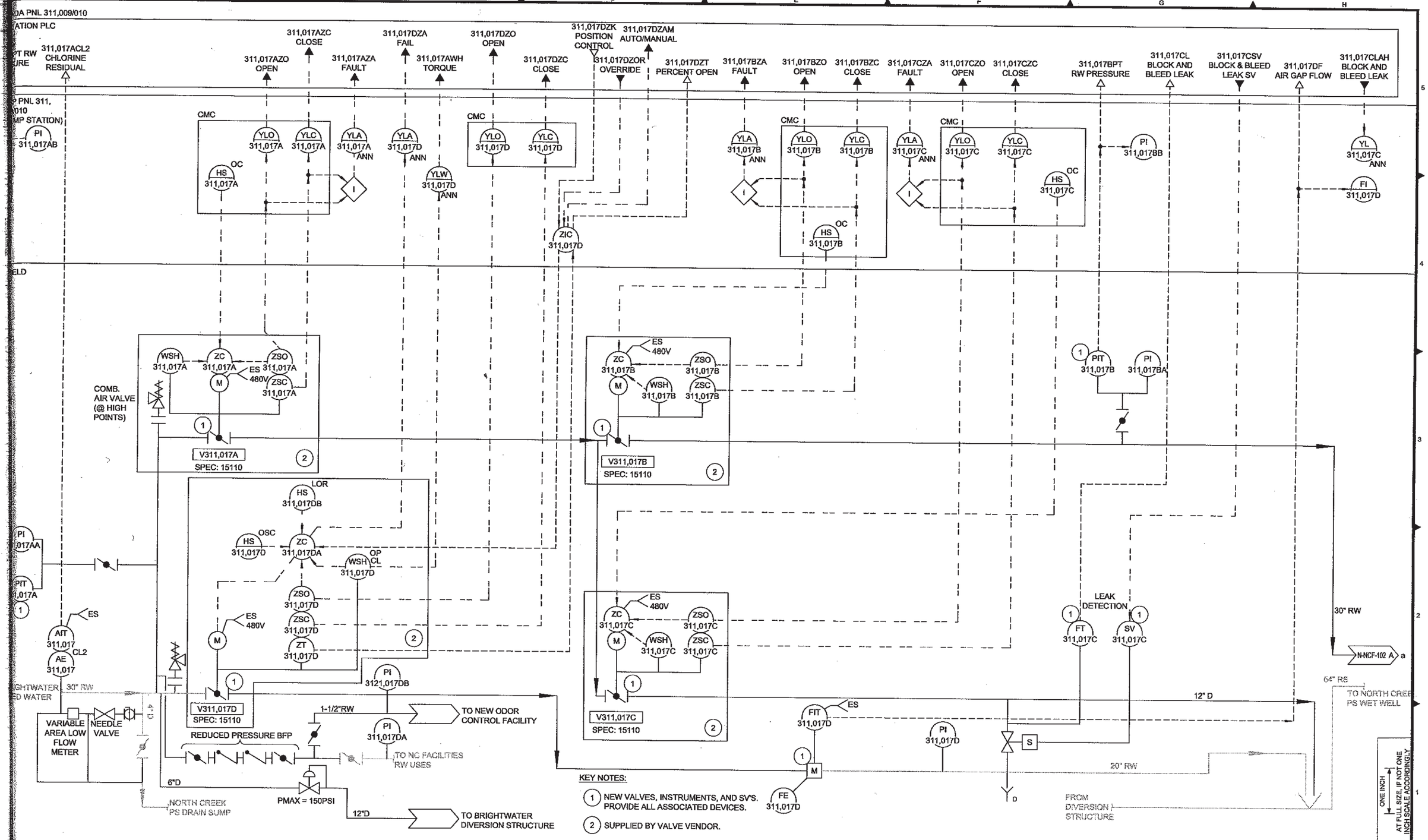

KEY NOTES:

1. NEW VALVES, INSTRUMENTS, AND SV'S. PROVIDE ALL ASSOCIATED DEVICES.
2. SUPPLIED BY VALVE VENDOR.

REVISION	BY	APP'D	DATE

MWH JACOBS ASSOCIATES
A Joint Venture

ECS ENGINEERING
Western Washington
18311 Bothell-Everett Hwy, # 260
Bothell, WA 98012
Ph: 425.402.6029 Fax: 425.483.3969
Eastern Washington
103 Palouse, # 10
Wenatchee, WA 98801
Ph: 509.667.1625 Fax: 509.667.2433
www.ecs-engineering.com

60% SUBMITTAL

DESIGNED: Brian Carter	CHECKED: Ryan McKnight
DRAWN: R. MCKNIGHT	SCALE: NOTED
DESIGN ACCEPTANCE:	CONTRACT NO:
PROJECT ACCEPTANCE:	BID PACKAGE NO: 7

King County

DEPARTMENT OF NATURAL RESOURCES & PARKS
BRIGHTWATER CONVEYANCE SYSTEM
NORTH CREEK FACILITIES CONTRACT

RECLAIMED WATER SYSTEM P&ID

DATE: NOV 2005
FILE NAME: 7-N-NCF-1001.dwg
DRAWING NO: N-NCF-101
SHEET NO: 168 OF 173

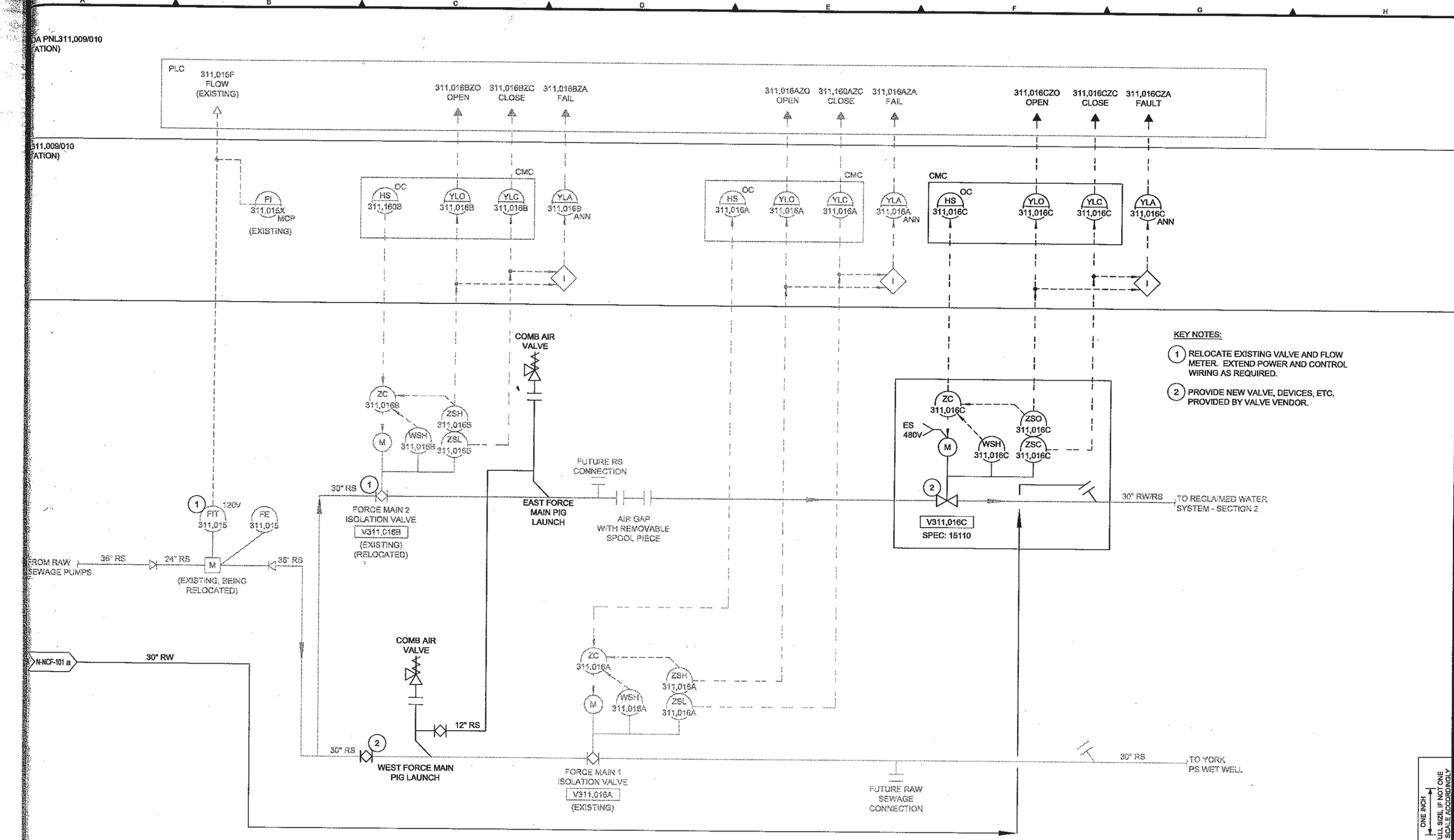

KEY NOTES:

1. RELOCATE EXISTING VALVE AND FLOW METER. EXTEND POWER AND CONTROL WIRING AS REQUIRED.
2. PROVIDE NEW VALVE, DEVICES, ETC. PROVIDED BY VALVE VENDOR.

REVISION	BY	APP'D	DATE

MWH
JACOBS ASSOCIATES
A Joint Venture

ECS ENGINEERING
Western Washington
18311 Bothell-Everett Hwy. # 260
Bothell, WA 98012
Ph: 425.402.6029 Fax: 425.483.3969
Eastern Washington
103 Palouse, # 10
Wenatchee, WA 98801
Ph: 509.667.1825 Fax: 509.667.2433
www.ecs-engineering.com

60% SUBMITTAL

DESIGNED: Brian Carter	CHECKED: Ryan McKnight
DRAWN: R. MCKNIGHT	SCALE: NOTED
DESIGN ACCEPTANCE:	CONTRACT NO:
PROJECT ACCEPTANCE:	BID PACKAGE NO: 7

King County

DEPARTMENT OF NATURAL RESOURCES & PARKS
BRIGHTWATER CONVEYANCE SYSTEM
NORTH CREEK FACILITIES CONTRACT

NORTH CREEK FORCE MAIN VALVING AND RECLAIMED WATER CONNECTION P&ID

DATE: NOV 2005
FILE NAME: 7-N-NCF-1002.dwg
DRAWING NO: N-NCF-102
SHEET NO: 169 OF 173

Appendix B: Brightwater Reclaimed Water Permit

Issuance Date:	June 10, 2011
Effective Date:	August 1, 2011
Expiration Date:	July 31, 2016

RECLAIMED WATER PERMIT NUMBER ST0045498

STATE OF WASHINGTON
DEPARTMENT OF ECOLOGY
Northwest Regional Office
3190 160th Avenue SE
Bellevue, WA 98008-5452

In compliance with the provisions of the State of Washington Reclaimed Water Act, Chapter 90.46 Revised Code of Washington, and the Water Pollution Control Law Chapter 90.48 Revised Code of Washington, as amended, and

STATE OF WASHINGTON
DEPARTMENT OF HEALTH
Water Reclamation and Reuse Program
16201 E. Indiana Avenue, Suite 1500
Spokane Valley, WA 99216

in compliance with the provisions of
Chapter 90.46 and 43.70 Revised Code of Washington, as amended,
authorizes

Brightwater Treatment Plant
King County Wastewater Treatment Division
King Street Center, KSC-NR-0512
Seattle, Washington 98104-3855

to produce, distribute, and use reclaimed water in accordance with
the Special "R" and General "G" Conditions which follow.

Plant Location:	Use Area Locations:
22509 State Route 9 SE, #101 Woodinville, WA 98072-6010	Reclaimed Water from King County's Brightwater Treatment Plant to various reclaimed water sites
Treatment Type:	Location of Treatment Plant:
Membrane Bioreactor & Sodium Hypochlorite Disinfection	Latitude: 47.7927 N Longitude: -122.1434 W

Kevin C. Fitzpatrick
Water Quality Section Manager
Northwest Regional Office
Washington State Department of Ecology

TABLE OF CONTENTS

SUMMARY OF PERMIT REPORT SUBMITTALS.....4

RECLAIMED WATER CONDITIONS

R1. WATER QUALITY LIMITS 5

R2. MONITORING REQUIREMENTS.....6
- A. Class A Reclaimed Water Monitoring
- B. Sampling and Analytical Procedures
- C. Flow Measurement, Field Measurement and Continuous Monitoring Devices
- D. Laboratory Accreditation

R3. REPORTING AND RECORDKEEPING REQUIREMENTS 8
- A. Reporting
- B. Records Retention
- C. Recording of Results
- D. Additional Monitoring by the Permittee
- E. Reporting Permit Violations
- F. Other Reporting
- G. Reclaimed Water Operational Records
- H. Maintaining a Copy of this Permit

R4. OPERATION AND MAINTENANCE.....12
- A. Certified Operator
- B. O & M Program
- C. Short-term Reduction
- D. Electrical Power Failure
- E. Decontamination of Reclaimed Water Conveyance System
- F. Cleaning and Disinfecting Piping System After Force Main Conversion
- G. Operations and Maintenance Manual

R5. RESIDUAL SOLIDS.....15

R6. PRETREATMENT.....15

R7. RECLAIMED WATER DISTRIBUTION AND USE.....15
- A. Authorized Uses and Locations
- B. Authorization for New Direct Non-potable Uses of Reclaimed Water
- C. Reclaimed Water Use Summary Plan
- D. Sale & Distribution Agreements
- E. Service and Use Area Agreements
- F. Use Area Responsibilities
- G. Irrigation Uses
- H. Commercial and Industrial Uses

I. Other Uses of Reclaimed Water
J. Reliability
K. Bypass Prohibited
L. Revocation of Authorization

R8. APPLICATION FOR PERMIT RENEWAL 21

GENERAL CONDITIONS

G1. SIGNATORY REQUIREMENTS.....22
G2. RIGHT OF INSPECTION AND ENTRY.....23
G3. PERMIT ACTIONS.....23
G4. REPORTING A CAUSE FOR MODIFICATION.....24
G5. PLAN REVIEW REQUIRED 25
G6. COMPLIANCE WITH OTHER LAWS AND STATUTES.....25
G7. DUTY TO REAPPLY 25
G8. TRANSFER OF THIS PERMIT 25
G9. REDUCED PRODUCTION FOR COMPLIANCE.....26
G10. REMOVED SUBSTANCES 26
G11. DUTY TO PROVIDE INFORMATION.....26
G12. OTHER REQUIREMENTS OF 40 CFR.....26
G13. ADDITIONAL MONITORING.....26
G14. PAYMENT OF FEES.....26
G15. PENALTIES FOR VIOLATING PERMIT CONDITIONS 26
G16. PROPERTY RIGHTS.....27
G17. DUTY TO COMPLY 27
G18. TOXIC POLLUTANTS.....27
G19. PENALTIES FOR TAMPERING.....27
G20. REPORTING PLANNED CHANGES.....27
G21. REPORTING ANTICIPATED NON-COMPLIANCE.....27
G22. REPORTING OTHER INFORMATION.....28
G23. COMPLIANCE SCHEDULES 28

APPENDIX A.....29

SUMMARY OF PERMIT REPORT SUBMITTALS

Refer to the Special and General Conditions of this permit for additional submittal requirements.

Permit Section	Submittal	Frequency	First Submittal Date
R3.A	Discharge Monitoring Report (DMR)	Monthly	September 15, 2011
R3.E	Reporting Permit Violations	As needed	
R3.G.4	Cross Connection Control Coordination Letter	Annually	May 31, 2012
R4.G	Operations and Maintenance Manual	As needed	
R7.C	Reclaimed Water Use Summary Plan	Annually	March 31, 2012
R7.D	Sale & Distribution Agreements	As needed	
R7.E	Service and Use Area Agreements	As needed	
R8	Application for Permit Renewal	1/permit cycle	January 31, 2016
G1	Signature Authority	As needed	
G1.C	Notice of Change in Authorization	As needed	
G4	Permit Application for Substantive Changes to the Discharge	As needed	
G5	Plan Review	As needed	
G8	Notice of Permit Transfer	As needed	

RECLAIMED WATER CONDITIONS

R1. WATER QUALITY LIMITS

All reclaimed water distribution and activities authorized by this permit must be consistent with the terms and conditions of this permit. The distribution of reclaimed water containing any of the following constituents more frequently than, or at a concentration in excess of, that authorized by this permit constitutes a violation of the terms and conditions of this permit.

Beginning on the effective date and lasting through the expiration date of this permit, the Permittee is authorized to produce, distribute, and use Class A reclaimed water to various reclaimed water sites. The production, distribution, and use of reclaimed water must comply with all specific conditions and requirements of the Washington State Water Reclamation and Reuse Standards, 1997 or subsequent versions, and is subject to the limits listed in Table 1. The Permittee must operate the system in accordance with the permit conditions to ensure statutory requirements are met including protecting the existing and future beneficial uses of waters of the State.

Table 1. Reclaimed Water Limits

Class A Reclaimed Water Limits		
Class A Reclaimed Water Prior to Distribution		
BOD_5	**Average Monthly [a]** 30 mg/L	**Average Weekly [b]** 45 mg/L
TSS	**Average Monthly [a]** 30 mg/L	**Average Weekly [b]** 45 mg/L
Turbidity	**Average Monthly [a]** 0.2 NTU	**Instantaneous Maximum [c]** 0.5 NTU
Total Coliform	**7-day Median [d]** 2.2 MPN / 100 ml	**Sample Maximum [e]** 23 MPN / 100 ml
pH [f]	Daily minimum is equal to or greater than 6.0 and the daily maximum is less than or equal to 9.0 standard units.	
Chlorine	A minimum chlorine residual of at least 1 mg/L after an effective contact time of at least 30 minutes is required.	
Distribution System [g]		
Residual Chlorine	**Minimum Daily** 0.5 mg/L	**Point of Compliance [h]** To Use Areas

[a] Average monthly effluent limit means the highest allowable average of daily discharges over a calendar month. To calculate the discharge value to compare to the limit, you add the value of each daily discharge measured during a calendar month and divide this sum by the total number of daily discharges measured.

[b] Average weekly limits are based on an arithmetic mean of the samples taken during distribution in a calendar week.

[c] The NTU instantaneous maximum is defined as the value not to be exceeded by a continuous measurement. Turbidity excursions lasting less than 5 minutes are allowed and not considered a permit violation.

[d] The median number of total coliform organisms in the reclaimed water after disinfection must not exceed 2.2 MPN per 100 milliliters, as determined from the bacteriological results of the last 7 days for which reclaimed water was distributed. The 7-day median must include all the analytical results from samples collected the previous 7 days. If there is an even number of values over the 7 days, the Permittee must report the larger of the two median values.

[e] The number of total coliform organisms must not exceed 23 MPN per 100 milliliters in any single sample.

[f] Indicates the range of permitted values. The Permittee must report the instantaneous max and min pH monthly.

[g] The Permittee may distribute a total of 21 million gallons per day (MGD) of reclaimed water to end users per day.

[h] A total chlorine residual of at least 0.5 mg/L must be maintained in the reclaimed water during conveyance to the use areas.

All Class A reclaimed water must at all times be oxidized, filtered, and disinfected. Therefore, reclaimed water must not be blended with wastewater treated only by chemically enhanced primary clarification (CEPC). The Class A reclaimed water must contain dissolved oxygen.

R2. MONITORING REQUIREMENTS

A. Class A Reclaimed Water Monitoring

The Permittee must:

a. Monitor influent loadings to the facility as required by NPDES permit number WA0032247.

b. Monitor the reclaimed water, for any water that will or is being distributed, for the parameters listed in Table 2.

Table 2. Monitoring Schedule

Parameter	Units	Sample Location Point	Sampling Frequency	Sample Type
Distributed Flow	GPD	Influent Pump Station (IPS) and Disinfection Building	Daily	Recording Meters
BOD_5	mg/L	Membrane Effluent Box (MEB)	2/week	24-hr flow weighted composite
TSS	mg/L	MEB	2/week	24-hr flow weighted composite
Turbidity [b]	NTU	MEB and IPS	Continuous [f]	On-line analyzer with recorder

Parameter	Units	Sample Location Point	Sampling Frequency	Sample Type
Total Coliform [d]	# of organisms per 100 mL	IPS and Disinfection Building	Daily	Grab [a]
pH	Standard Units	MEB or IPS and Disinfection Building	Continuous [f]	On-line analyzer with recorder
Total Chlorine Residual (for disinfection purposes) [c]	mg/L	Disinfection Building and IPS	Continuous [f]	On-line analyzer with recorder
Total Chlorine Residual (for distribution purposes) [c]	mg/L	IPS and York Pump Station	Continuous [f]	On-line analyzer with recorder
Dissolved Oxygen [e]	mg/L	MEB	Continuous [f]	On-line analyzer with recorder
Ammonia (as N)	mg/L	MEB or IPS	Weekly	24-hr composite
Nitrate + Nitrite (as N)	mg/L	MEB or IPS	Weekly	24-hr composite
Total Phosphorus	mg/L	MEB or IPS	Weekly	24-hr composite

[a] Grab samples must be taken at the same time daily when wastewater characteristics are the most demanding on the treatment facilities and disinfection processes.

[b] Effluent turbidity analysis must be performed by a continuous recording turbidimeter. The Permittee must report the maximum value that exceeds five minutes. .

[c] Monitoring for Total Residual Chlorine is required when the Permittee is producing and distributing reclaimed water. .

[d] As an alternate method, total coliform bacteria may be monitored using the ONPUG-MUG test (also called Autoanalysis Colilert System) per latest edition of *Standard Methods for the Examination of Water and Wastewater.* The Permittee must report in its discharge monitoring report when it uses this alternative method.

[e] The daily minimum value must be reported.

[f] "Continuous" means uninterrupted except for brief periods of time for calibration, for power failure, or for unanticipated equipment repair or maintenance. The Permittee must sample every four hours when continuous monitoring is not possible.

B. Sampling and Analytical Procedures

Samples and measurements taken to meet the requirements of this permit must be representative of the volume and nature of the monitored parameters, including representative sampling of any unusual discharge or discharge condition, including upsets and maintenance-related conditions affecting reclaimed water quality.

Sampling and analytical methods used to meet the reclaimed water monitoring requirements specified in this permit must conform to the latest revision of the *Guidelines Establishing Test Procedures for the Analysis of Pollutants* contained in 40 CFR Part 136 or to the latest revision of *Standard Methods for the Examination of Water and Wastewater* (APHA), unless otherwise specified in this permit or approved in writing by the Department of Ecology (Ecology).

C. Flow Measurement, Field Measurement and Continuous Monitoring Devices

The Permittee must:

1. Select and use appropriate flow measurement, field measurement, and continuous monitoring devices and methods consistent with accepted scientific practices.
2. Install, calibrate, and maintain these devices to ensure the accuracy of the measurements is consistent with the accepted industry standard and the manufacturer's recommendation for that type of device.
3. Use field measurement devices as directed by the manufacturer and do not use reagents beyond their expiration dates.
4. Calibrate these devices at the frequency recommended by the manufacturer.
5. Calibrate flow monitoring devices at a minimum frequency of at least one calibration per year.
6. Maintain calibration records for at least five years.
7. Verify the accuracy of the on-line turbidimeters at least once every two weeks in accordance with the manufacturer's recommendations.

D. Laboratory Accreditation

The Permittee must ensure that all monitoring data required by Ecology is prepared by a laboratory registered or accredited under the provisions of chapter 173-50 WAC, *Accreditation of Environmental Laboratories.* Flow, temperature, settleable solids, conductivity, pH, dissolved oxygen, chlorine residual and internal process control parameters are exempt from this requirement. On-line turbidimeters, dissolved oxygen meters, and chlorine analyzers must be verified every two weeks and calibrated per the manufacturer's recommendations.

R3. REPORTING AND RECORDKEEPING REQUIREMENTS

The Permittee must monitor and report in accordance with the following conditions. The falsification of information submitted to Ecology constitutes a violation of the terms and conditions of this permit.

A. Reporting

The first monitoring period begins on the effective date of the permit. The Permittee must:

1. Submit required monitoring results each month.

2. Submit monitoring data by conventional means or via Ecology's electronic DMR application. Information needed to register for electronic submittal available at: http://www.ecy.wa.gov/programs/wq/permits/paris/webdmr.html.

3. Submit the form as required with the words "no discharge" entered in place of the monitoring results, if the facility did not produce reclaimed water during a given monitoring period. Enter “no discharge” for an entire DMR, if the facility did not distribute reclaimed water off-site during a given monitoring period. No discharge in this case equates to no off-site reclamation or reuse.

4. Submittal required no later than the 15th day of the month following the completed monitoring period, unless otherwise specified in this permit.

B. Records Retention

The Permittee must retain records of all monitoring information for a minimum of five (5) years, corresponding to the life cycle of this permit. Such information must include all calibration and maintenance records and all original recordings for continuous monitoring instrumentation, copies of all reports required by this permit, and records of all data used to complete the application for this permit. During the course of any unresolved litigation regarding the discharge of pollutants by the Permittee or when requested by Ecology, the Permittee must extend this period of retention.

C. Recording of Results

For each measurement or sample taken, the Permittee must record the following information:

1. The date, exact place and time of sampling;
2. The individual who performed the sampling or measurement;
3. The dates the analyses were performed;
4. The individual who performed the analyses;
5. The analytical techniques or methods used; and
6. The results of all analyses.

D. Additional Monitoring by the Permittee

If the Permittee monitors any pollutant more frequently than required by Condition R2 of this permit, then the Permittee must include the results of such monitoring in the calculation and reporting of the data submitted in the Permittee's DMR.

E. Reporting Permit Violations

1. The Permittee must take the following actions when it violates or is unable to comply with any permit condition:

   a. Immediately take action to stop, contain, and cleanup unauthorized discharges or otherwise stop the noncompliance and correct the problem.

   b. If applicable, immediately repeat sampling and analysis. Submit the results of any repeat sampling to Ecology within thirty (30) days of sampling.

2. Follow the established protocols for managing the system regarding sampling and wasting of reclaimed waters.

3. Repeat sampling and analysis of any violation and submit the results to Ecology within thirty (30) days after becoming aware of the violation.

4. Within 24 hours of discovering the noncompliance condition, notify the Departments of Health and Ecology of the failure to comply. Notify the local health authorities of any discharge of inadequately treated reclaimed water. The Permittee must notify:

   - Ecology using the ERTS (Environmental Reporting Tracking System) by calling 425-649-7000.

   - The Department of Health by calling 509-329-2146.

5. Submit a detailed, written report to Ecology and the Department of Health with that month’s DMR submittal, unless requested earlier by Ecology, describing the nature of the violation, corrective action taken and/or planned, steps to be taken to prevent a recurrence, results of the resampling, and any other pertinent information. Work with Ecology to prepare an operating protocol for conditions with frequent recurrence.

Compliance with these requirements does not relieve the Permittee from responsibility to maintain continuous compliance with the terms and conditions of this permit or the resulting liability for failure to comply.

F. Other Reporting

The Permittee must report all instances of noncompliance, not required to be reported immediately or within 24 hours, at the time that monitoring reports for R3.A ("Reporting") are submitted. The reports must contain the information listed in paragraph E.3, above. Compliance with these requirements does not relieve the Permittee from responsibility to maintain continuous compliance with the terms and conditions of this permit or the resulting liability for failure to comply.

G. Reclaimed Water Operational Records

The Permittee must:

1. Keep maintenance records for five (5) years, corresponding to the life cycle of this permit, on all major electrical and mechanical components of the reclamation facility, distribution, and use areas. Records must clearly specify the frequency and type of maintenance recommended by the manufacturer and must show the frequency and type of maintenance performed. These maintenance records must be available for inspection at all times.

2. Maintain operating records at the reclamation treatment plant or within a central depository within the Permittee's operating agency for five (5) years. These records must include records of all analyses performed, records of operational problems, unit process and equipment breakdowns, and diversions to emergency storage or disposal; and all corrective or preventative action taken.

3. Record and maintain separate record files of process or equipment failures triggering an alarm that is key to maintaining reliability of reclaimed water quality. The recorded information must include the time and cause of failure and corrective action taken.

4. Cross Connection Control Coordination: The Permittee must provide to the Departments of Health and Ecology an annual letter confirming that they have contacted all the public water supplier(s) where reclaimed water is being used in their service area. The letter must indicate where reclaimed water is used and for what purpose, and remind the water suppliers(s) of their duty to comply with the cross connection control report requirements from the Department of Health.

H. Maintaining a Copy of this Permit

The Permittee must keep a copy of this permit at the facility and make it available upon request to Ecology inspectors.

R4. OPERATION AND MAINTENANCE

The Permittee must, at all times, properly operate and maintain all facilities or systems of treatment and control (and related appurtenances) which are installed to achieve compliance with the terms and conditions of this permit. Proper operation and maintenance includes adequate laboratory controls and appropriate quality assurance procedures. This provision requires the operation of backup or auxiliary facilities or similar systems, which are installed by a Permittee only when the operation is necessary to achieve compliance with the conditions of this permit.

A. Certified Operator

An operator certified for at least a Class IV plant by the state of Washington must be in responsible charge of the day-to-day operation of the treatment plant. An operator certified for at least a Class III plant must be in charge during all regularly scheduled shifts at the Plant.

B. O & M Program

The Permittee must:

1. Institute an adequate operation and maintenance program for the entire reclamation system.

2. Keep maintenance records on all major electrical and mechanical components of the reclaimed water treatment plant. Such records must clearly specify the frequency and type of maintenance recommended by the manufacturer and must show the frequency and type of maintenance performed.

3. Make maintenance records available for inspection at all times.

4. Maintain, at all times, the reclamation facility, County-owned distribution, and County-owned use areas and keep all equipment in a reliable operating condition.

5. Maintain a chlorine residual of at least 0.5 mg/l in the reclaimed water during conveyance from the reclamation plant to the use area boundaries, as determined by measurements at the influent pump station and downstream locations.

6. Notify end users whenever reclaimed water not meeting the requirements listed in Table 1 has been distributed to use areas.

C. Short-term Reduction

If a Permittee contemplates a reduction in the level of treatment that would cause a violation of permit limits on a short-term basis for any reason, and such reduction cannot be avoided, the Permittee must:

1. Give written notification to Ecology, if possible, thirty (30) days prior to such activities.

2. Detail the reasons for, length of time of, and the potential effects of the reduced level of treatment.

This notification does not relieve the Permittee of its obligations under this permit.

D. Electrical Power Failure

The Permittee is responsible for maintaining adequate safeguards to prevent the discharge of untreated wastes or wastes not treated in accordance with the requirements of this permit during electrical power failure at the treatment plant. The power supply must be provided with one of the following reliability features to assure that inadequately treated wastewater is not discharged to distribution or use areas:

1. An alarm and a standby power source

2. An alarm and automatically actuated alternative disposal provisions. All equipment must be either independent of the normal power supply or provided with a standby power supply.

E. Decontamination of Reclaimed Water Conveyance System

The Permittee must:

1. Have a procedure, as contained in the Operations and Maintenance Manual, to decontaminate reclaimed water piping and other appurtenances following incidents when the permit limits, as listed in Table 1, are exceeded.

2. Re-treat reclaimed water such that it meets all reclaimed water permit limits or discharge it through an approved NPDES outfall.

3. Monitor, and if necessary disinfect, the reclaimed water pipelines and other appurtenances that were exposed to reclaimed water that exceeds the permit limits.

4. Ensure that reclaimed water piping and other appurtenances are decontaminated prior to returning the facilities to reclaimed water service.

F. Cleaning and Disinfecting Piping System After Force Main Conversion

The Permittee must:

1. Follow the cleaning and disinfection procedures as approved by the Departments of Health and Ecology and as contained in the Operations and Maintenance Manual. Water not meeting the reclaimed water permit limits must be either re-treated such that it meets all reclaimed water permit limits or discharged through an approved NPDES outfall.

2. Monitor, and if necessary disinfect, the effluent pipelines and other appurtenances located downstream of the North Creek Pump Station for coliform contamination per the total coliform testing requirements in Table 1 of this permit.

3. Complete the monitoring, and if necessary disinfection, in item number 2 above prior to returning the facilities to reclaimed water service.

4. Notify the Departments of Health and Ecology with the confirmatory testing results and obtain approval from the departments prior to initiating reclaimed water service.

G. Operations and Maintenance Manual

The Operation and Maintenance (O&M) Manual will be the same manual used to meet the NPDES permit requirements.

The Permittee must:

1. Review the O&M Manual at least annually.

2. Submit to Ecology for review and approval substantial changes or updates to the O&M Manual whenever it incorporates them into the manual.

3. Maintain a copy of the O&M Manual at the permitted facility.

4. Follow the instructions and procedures of this manual.

In addition to the requirements of WAC 173-240-080(1) and (2), the O&M Manual must include:

1. Emergency procedures for plant shutdown and cleanup in event of reclaimed water system upset or failure.

2. Reclaimed water system maintenance procedures and the proper handling of any associated wastewater as a result of these procedures (i.e. pipeline flushing, disinfection of conveyance lines, etc.).

3. Reclaimed water system maintenance procedures that generate wastewater.

4. Procedures to maintenance staff when cleaning, or maintaining other equipment or performing other tasks which are necessary to protect the operation of the reclaimed water system.

5. Treatment plant process control monitoring schedule.

6. Reclaimed water sampling protocols and procedures for compliance with the sampling and reporting requirements in the reclaimed water permit.

7. Adequate staffing levels to operate and maintain the treatment processes and carry out compliance monitoring required by the permit.

8. Alarm condition response plan to ensure that no untreated or inadequately treated wastewater will be delivered to reclaimed water use areas.

9. Discussion of the cross-connection control and inspection program, including who will be responsible for compliance and testing of the cross connection control devices.

10. Operational Control Strategies for reclaimed water use under the Permittee's control.

11. Cleaning, disinfecting, testing, and maintaining a chlorine residual for the reclaimed water transmission and distribution system.

R5. RESIDUAL SOLIDS

The Permittee must handle any residuals generated from the reclamation process as described in NPDES permit No. WA0032247 and the Brightwater Facilities Plan approved by Ecology.

R6. PRETREATMENT

The Permittee must ensure that all commercial and industrial contributors to the collection system comply with pretreatment regulations, and that it meets the pretreatment requirements in NPDES permit No. WA0032247.

R7. RECLAIMED WATER DISTRIBUTION AND USE

A. Authorized Uses and Locations

Beginning on the effective date and lasting through the expiration date of this permit, the Permittee is authorized to distribute reclaimed water in accordance with the terms and conditions of this permit for authorized uses.

The distribution of reclaimed water by the Permittee that does not meet the treatment, water quality and monitoring requirements established in this permit or the use of reclaimed water other than for authorized uses in a Department of Health- and Ecology - approved reclaimed water engineering report is a violation of the terms and conditions of this permit.

The Permittee may produce and distribute Class A reclaimed water for the following irrigation and commercial and industrial uses at the locations listed in Table 3 and at new locations as described in R7.B.

Table 3. Reclaimed Water Uses and Locations

Customer	Use	Location
Willows Run Golf Course	Irrigation Uses – golf course features, landscaping areas, and lined storage irrigation ponds.	10402 Willows Road NE Redmond, WA 98052
King County - Sammamish River Landscaping Strip	Irrigation Uses - landscaping areas.	Along west side of Sammamish River between NE 124th Street & NE 100th Court, Redmond, WA 98052
King County – Environmental Education and Community Center	Commercial and Industrial Uses - Toilet and Urinal Flushing. Irrigation Uses – landscaping areas.	22509 State Route 9 SE, Woodinville, WA 98072-6010.
King County – Brightwater Art Sculpture	Commercial and Industrial Uses - Decorative Fountains	22509 State Route 9 SE, Woodinville, WA 98072-6010
King County – North Creek Pump Station	Irrigation Uses - landscaping areas.	18707 North Creek Parkway, Bothell, WA 98011
King County – York Pump Station	Commercial and Industrial Uses – Truck Fill Station. Irrigation Uses – landscaping areas.	14120 NE 124th Street, Redmond, WA 98052
King County – Hollywood Pump Station	Irrigation Uses - landscaping areas.	14815 NE 124th Street, Redmond, WA 98053

B. <u>Authorization for New Non-potable Uses of Reclaimed Water</u>

The Permittee may provide reclaimed water for all irrigation, and commercial and industrial uses as listed in the 1997 Washington State Water Reclamation and Reuse Standards at additional locations not listed in R7.A. Crop irrigation uses are allowed and include irrigation of both food and non-food crops.

The Permittee must document new locations for irrigation, and commercial and industrial use sites in the Reclaimed Water Use Summary Plan required by this permit. In accordance with the terms and conditions of this permit, the County must meet the following conditions:

1. Beneficial use areas and requirements for use must comply with the Washington State Water Reclamation and Reuse Standards. The class of reclaimed water provided meets or exceeds the minimum requirements for the proposed use. Irrigation uses do not exceed agronomic rates of application.

2. The reclaimed water meets all applicable requirements of this permit for the approved class of reclaimed water, including source control, treatment, water quality limits, monitoring, reporting, record keeping, operation and maintenance, distribution, and use.

3. The Permittee lists the new use areas in the next annual Reclaimed Water Use Summary Plan and submits a copy of the revised plan to the Departments of Ecology and Health as described in R7.C.

4. The Permittee submits, to the Departments of Ecology and Health, the Sale and Distribution of Reclaimed Water Agreement (if applicable) which is the contract between King County and the water purveyor and/or the Service and Use Area Agreement which is the contract between King County and the end user.

Groundwater recharge, streamflow augmentation, and discharges to wetlands as beneficial uses are not authorized by this permit. A new "type" of use (i.e. groundwater recharge, streamflow augmentation, discharge to wetlands, etc.) will require the approval of an engineering report or amendments to the existing engineering report and reopening of this permit for review and public comment prior to implementation of the new type of use.

C. Reclaimed Water Use Summary Plan

The Permittee must prepare a Water Use Summary Plan, which contains a summary description of the reclaimed water distribution system. The Permittee must review and update the plan annually and submit updates to the Departments of Health and Ecology. The annual updates are due March 31st of each year, and cover the previous calendar year. The plan must, at a minimum:

1. Describe the current reuse distribution system.

2. Identify all current water purveyors, uses, and location of reuse sites.

3. Evaluate reuse sites, estimated volume of reclaimed water use at each site, means of application, purpose of application (e.g., irrigation), the application rates, water balance, expected agronomic uptake, and assure reclaimed water is not discharged to any ground water or surface water except as allowed under an existing State Waste Discharge Permit or NPDES Permit, respectively.

D. Sale & Distribution Agreements

Where the reclaimed water distribution system or additional treatment system to maintain reclaimed water quality is not under direct control of the Permittee:

1. The entity that provides additional treatment, distributes, owns, or otherwise maintains control over the reclaimed water use area is responsible for reuse facilities and activities inherent to the distribution and use of the reclaimed water to ensure that the system operates as approved by the Departments of Health and Ecology in accordance with this permit.

2. A binding Sale & Distribution Agreement among the parties involved is required to ensure that distribution, operation, maintenance, and monitoring meet all requirements of the Departments of Health and Ecology. The Sale & Distribution Agreement must be consistent with the requirements of the *Water Reclamation and Reuse Standards*, 1997. A standard Sale & Distribution Agreement must be reviewed and approved by the Departments of Health and Ecology prior to implementation. A copy of each site-specific Sale & Distribution Agreement must be provided to the Departments of Health and Ecology prior to use.

3. The Sale & Distribution Agreements must provide the Permittee with authority to terminate service of reclaimed water to a customer violating the *Water Reclamation and Reuse Standards* and restrictions outlined in the Sale & Distribution Agreement.

4. The Permittee must maintain all Sale & Distribution Agreements for the duration of the permit. The Permittee must inform the Departments of Health and Ecology in writing of any proposed changes to the approved, standard Sale & Distribution Agreement.

E. Service and Use Area Agreements

Where the reclaimed water use area is not under direct control of the Permittee:

1. The entity that owns or otherwise maintains control over the reclaimed water use area is responsible for on-site reclaimed water facilities, infrastructure, and activities inherent to the use of the reclaimed water to ensure that the system operates as approved by the Departments of Health and Ecology in accordance with this permit.

2. Reclaimed water use, including runoff and spray, must be confined to the designated and approved use areas.

3. A binding Service and Use Area Agreement among the parties involved is required to ensure that construction, operation, maintenance, and monitoring meet all requirements of the Departments of Health and Ecology. This Service and Use Area Agreement must be consistent with the requirements of the *Water Reclamation and Reuse Standards*, 1997. A

standard Service and Use Area Agreement must be reviewed and approved by the Departments of Health and Ecology prior to implementation. A copy of each site-specific Service and Use Area Agreement must be provided to the Departments of Health and Ecology prior to use.

4. The Service and Use Area Agreement must provide the Permittee with authority to terminate service of reclaimed water to a customer violating the *Water Reclamation and Reuse Standards* and restrictions outlined in the reclaimed water use agreement.

5. The Permittee must maintain all Service and Use Area Agreements for the duration of the permit. The Permittee must inform the Departments of Health and Ecology in writing of any proposed changes to the approved, standard Service and Use Area Agreement.

F. Use Area Responsibilities

1. The Permittee must develop general language, symbols, and colors to be used for notification signs and have it approved by the Departments of Ecology and Health. The signs must be used in all reclaimed water use areas, consistent with the *Water Reclamation and Reuse Standards*.

2. All reclaimed water valves, storage facilities, and outlets must be tagged or labeled to warn the public or employees that the water is not intended for drinking. The signage or advisory notification must be colored purple with white or black lettering.

3. Reclaimed water use, including runoff and spray, must be confined to the designated and approved use area.

4. Precautions must be taken to assure that reclaimed water will not be sprayed on people or any facility or area not designated for reuse, including but not limited to buildings, passing vehicles, and drinking water fountains.

5. There must be no hose bibs on reclaimed irrigation lines unless approved by the Departments of Health and Ecology.

6. Where the reclaimed water production, distribution, and use areas are under direct control of the Permittee, the Permittee must maintain control and be responsible for all facilities and activities inherent to the production, distribution, and use of the reclaimed water. The Permittee must ensure that the reuse system operates as approved by the Departments of Health and Ecology.

7. Tank trucks and other equipment used to distribute reclaimed water must be clearly identified with advisory signs. Tank trucks used to transport reclaimed water must not be used to transport potable water that is used for drinking or other potable purposes, unless they have been cleaned and disinfected to the satisfaction of the potable water purveyor, and the tank

truck is contracted to or operated by an approved public water supplier. Methods for truck filling shall be done so that cross connection problems do not arise. Tank trucks used to transport reclaimed water must be inspected and approved for such use prior to transporting reclaimed water. A procedure must be in place that documents the above requirements.

8. The Permittee must assure that all customers or authorized personnel using reclaimed water have completed training in the requirements for appropriate use of the water, including signage, cross connection control requirements, public health, and environmental protection.

G. Irrigation Uses

1. For any irrigation use of reclaimed water, the hydraulic loading rate of reclaimed water must be applied at agronomic rates and be determined based on a water balance analysis or other methods such as moisture sensors, rain sensors, or hand inspections.

2. There must be no runoff of reclaimed water applied to land by spray irrigation to any surface waters of the state or to any land not authorized by approved Service and Use Area Agreement.

3. There must be no application of reclaimed water for irrigation purposes when the ground is saturated or frozen.

4. The reclaimed water must not be applied to the irrigation lands in quantities that:

   a. Significantly reduce or destroy the long-term infiltration rate of the soil.

   b. Cause long-term anaerobic conditions in the soil.

   c. Cause ponding of reclaimed water and produce objectionable odors or support insects or vectors.

H. Commercial and Industrial Uses

Commercial and industrial uses must conform to the state Water Reclamation and Reuse Standards for Class A reclaimed water. Any wastewater discharged from commercial or industrial uses is regulated as wastewater and subject to waste discharge permit requirements.

I. Other Uses of Reclaimed Water

Water reclamation plant effluent used for sewage treatment purposes within the bounds of the wastewater treatment facility and other County-owned facilities (not subject to public exposure) is not required to meet the state Water Reclamation and Reuse Standards for Class A reclaimed water, except in areas where there is potential public exposure as determined by the Departments of Health and Ecology.

J. Reliability

The Permittee must maintain the highest reliability class as described in the Water Reclamation and Reuse Standards, which require one of the following features for each of the critical reclamation treatment unit processes of oxidation, filtration, and disinfection:

1. Alarms and standby power source.

2. Alarms and automatically actuated disposal provisions.

K. Bypass Prohibited

The Permittee must not bypass untreated or partially treated wastewater from the reclamation plant or any intermediate unit processes to the distribution system or point of use at any time. All reclaimed water distributed for beneficial use must meet Class A requirements at all times. The Permittee must retain water not meeting Class A Reclaimed Water Standards for additional treatment by diversion to a bypass storage structure or discharged back to the sewer system or headworks for additional treatment.

The Permittee must notify the Departments of Ecology and Health by telephone within 24 hours of any discharge not meeting Class A entering the distribution system. The Permittee must not discharge substandard reclaimed water to the reclaimed water use areas.

L. Revocation of Authorization

Ecology may revoke authorization to provide service if the Permittee fails to comply with any requirement in this permit. Ecology will base its determination to revoke authorization on the risk to public health and safety or threat to waters of the state. Ecology may revoke the authorization for any or all reclamation facilities and use areas located within a specific geographic area if, due to a geologic or hydrologic condition, the cumulative effect of the reclamation facilities and use areas causes the violation of state water quality standards. Before revoking the authorization, Ecology will notify the Permittee in writing and provide a reasonable opportunity and time frame to correct the noncompliance.

R8. APPLICATION FOR PERMIT RENEWAL

The Permittee must apply for permit renewal at least 180 days prior to expiration of this permit.

GENERAL CONDITIONS

G1. SIGNATORY REQUIREMENTS

All applications, reports, or information submitted to Ecology and Health must be signed and certified.

A. All permit applications must be signed by either a principal executive officer or a ranking elected official.

B. All reports required by this permit and other information requested by Ecology and Health must be signed by a person described above or by a duly authorized representative of that person. A person is a duly authorized representative only if:

1. The authorization is made in writing by a person described above and submitted to Ecology.

2. The authorization specifies either an individual or a position having responsibility for the overall operation of the regulated facility, such as the position of plant manager, superintendent, position of equivalent responsibility, or an individual or position having overall responsibility for environmental matters. (A duly authorized representative may thus be either a named individual or any individual occupying a named position.)

C. Changes to authorization. If an authorization under paragraph B.2, above, is no longer accurate because a different individual or position has responsibility for the overall operation of the facility, a new authorization satisfying the requirements of paragraph B.2, above, must be submitted to Ecology prior to or together with any reports, information, or applications to be signed by an authorized representative.

D. Certification. Any person signing a document under this section must make the following certification:

> *I certify under penalty of law, that this document and all attachments were prepared under my direction or supervision in accordance with a system designed to assure that qualified personnel properly gathered and evaluated the information submitted. Based on my inquiry of the person or persons who manage the system or those persons directly responsible for gathering information, the information submitted is, to the best of my knowledge and belief, true, accurate, and complete. I am aware that there are significant penalties for submitting false information, including the possibility of fine and imprisonment for knowing violations.*

G2. RIGHT OF INSPECTION AND ENTRY

The Permittee must allow an authorized representative of Ecology and Health, upon the presentation of credentials and such other documents as may be required by law:

A. To enter upon the premises where a discharge is located or where any records must be kept under the terms and conditions of this permit.

B. To have access to and copy - at reasonable times and at reasonable cost - any records required to be kept under the terms and conditions of this permit.

C. To inspect - at reasonable times - any facilities, equipment (including monitoring and control equipment), practices, methods, or operations regulated or required under this permit.

D. To sample or monitor - at reasonable times - any substances or parameters at any location for purposes of assuring permit compliance or as otherwise authorized by the Clean Water Act.

G3. PERMIT ACTIONS

This permit may be modified, revoked and reissued, or terminated either at the request of any interested person (including the Permittee) or upon Ecology and Health's initiative. However, the permit may only be modified, revoked and reissued, or terminated for the reasons specified in 40 CFR 122.62, 122.64 or WAC 173-220-150 according to the procedures of 40 CFR 124.5.

A. The following are causes for terminating this permit during its term, or for denying a permit renewal application:

1. Violation of any permit term or condition.

2. Obtaining a permit by misrepresentation or failure to disclose all relevant facts.

3. A material change in quantity or type of waste disposal.

4. A determination that the permitted activity endangers human health or the environment, or contributes to water quality standards violations and can only be regulated to acceptable levels by permit modification or termination [40 CFR Part 122.64(3)].

5. A change in any condition that requires either a temporary or permanent reduction, or elimination of any discharge or sludge use or disposal practice controlled by the permit [40 CFR Part 122.64(4)].

6. Nonpayment of fees assessed pursuant to RCW 90.48.465.

7. Failure or refusal of the Permittee to allow entry as required in RCW 90.48.090.

B. The following are causes for modification but not revocation and reissuance except when the Permittee requests or agrees:

1. A material change in the condition of the waters of the state.

2. New information not available at the time of permit issuance that would have justified the application of different permit conditions.

3. Material and substantial alterations or additions to the permitted facility or activities which occurred after this permit issuance.

4. Promulgation of new or amended standards or regulations having a direct bearing upon permit conditions, or requiring permit revision.

5. The Permittee has requested a modification based on other rationale meeting the criteria of 40 CFR Part 122.62.

6. Ecology and Health have determined that good cause exists for modification of a compliance schedule, and the modification will not violate statutory deadlines.

7. Incorporation of an approved local pretreatment program into a municipality's permit.

C. The following are causes for modification or alternatively revocation and reissuance:

1. Cause exists for termination for reasons listed in A1 through A7 of this section, and Ecology and Health determine that modification or revocation and reissuance is appropriate.

2. Ecology has received notification of a proposed transfer of the permit. A permit may also be modified to reflect a transfer after the effective date of an automatic transfer (General Condition G8) but will not be revoked and reissued after the effective date of the transfer except upon the request of the new permittee.

G4. REPORTING A CAUSE FOR MODIFICATION

The Permittee must submit a new application, or a supplement to the previous application, along with required engineering plans and reports whenever a material change to the facility or in the quantity or type of discharge is anticipated which is not specifically authorized by this permit. This application must be submitted at least sixty (60) days prior to any proposed changes. The filing of a request by the Permittee for a permit modification, revocation and reissuance, or termination, or a notification of planned changes or anticipated noncompliance does not relieve the Permittee of the duty to comply with the existing permit until it is modified or reissued.

G5. PLAN REVIEW REQUIRED

Prior to constructing or modifying any reclaimed water control facilities, an engineering report and detailed plans and specifications must be submitted to Ecology for approval in accordance with chapter 173-240 WAC. Engineering reports, plans, and specifications must be submitted at least 180 days prior to the planned start of construction unless a shorter time is approved by Ecology. Facilities must be constructed and operated in accordance with the approved plans.

G6. COMPLIANCE WITH OTHER LAWS AND STATUTES

Nothing in this permit must be construed as excusing the Permittee from compliance with any applicable federal, state, or local statutes, ordinances, or regulations.

G7. DUTY TO REAPPLY

The Permittee must apply for permit renewal at least 180 days prior to expiration of the permit.

G8. TRANSFER OF THIS PERMIT

In the event of any change in control or ownership of facilities from which the authorized discharge emanate, the Permittee must notify the succeeding owner or controller of the existence of this permit by letter, a copy of which must be forwarded to Ecology.

A. Transfers by Modification

Except as provided in paragraph (B) below, this permit may be transferred by the Permittee to a new owner or operator only if this permit has been modified or revoked and reissued under 40 CFR 122.62(b)(2), or a minor modification made under 40 CFR 122.63(d), to identify the new Permittee and incorporate such other requirements as may be necessary under the Clean Water Act.

B. Automatic Transfers

This permit may be automatically transferred to a new Permittee if:

1. The Permittee notifies Ecology at least 30 days in advance of the proposed transfer date.

2. The notice includes a written agreement between the existing and new Permittees containing a specific date transfer of permit responsibility, coverage, and liability between them.

3. Ecology does not notify the existing Permittee and the proposed new Permittee of its intent to modify or revoke and reissue this permit. A modification under this subparagraph may also be minor modification under 40 CFR 122.63. If this notice is not received, the transfer is effective on the date specified in the written agreement.

G9. REDUCED PRODUCTION FOR COMPLIANCE

The Permittee, in order to maintain compliance with its permit, must control production and/or all discharges upon reduction, loss, failure, or bypass of the treatment plant until the facility is restored or an alternative method of treatment is provided. This requirement applies in the situation where, among other things, the primary source of power of the treatment plant is reduced, lost, or fails.

G10. REMOVED SUBSTANCES

Collected screenings, grit, solids, sludges, filter backwash, or other pollutants removed in the course of treatment or control of reclaimed water must not be resuspended or reintroduced to the final effluent stream for discharge to state waters.

G11. DUTY TO PROVIDE INFORMATION

The Permittee must submit to Ecology and Health, within a reasonable time, all information which Ecology and Health may request to determine whether cause exists for modifying, revoking and reissuing, or terminating this permit or to determine compliance with this permit. The Permittee must also submit to Ecology and Health upon request, copies of records required to be kept by this permit [40 CFR 122.41(h)].

G12. OTHER REQUIREMENTS OF 40 CFR

All other requirements of 40 CFR 122.41 and 122.42 are incorporated in this permit by reference.

G13. ADDITIONAL MONITORING

Ecology or Health may establish specific monitoring requirements in addition to those contained in this permit by administrative order or permit modification.

G14. PAYMENT OF FEES

The Permittee must submit payment of fees associated with this permit as assessed by Ecology.

G15. PENALTIES FOR VIOLATING PERMIT CONDITIONS

Any person who is found guilty of willfully violating the terms and conditions of this permit must be deemed guilty of a crime, and upon conviction thereof must be punished by a fine of up to $10,000 and costs of prosecution, or by imprisonment in the discretion of the court. Each day upon which a willful violation occurs may be deemed a separate and additional violation.

Any person who violates the terms and conditions of a waste discharge permit must incur, in addition to any other penalty as provided by law, a civil penalty in the amount of up to $10,000 for every such violation. Each and every such violation must be a separate and distinct offense, and in case of a continuing violation, every day's continuance must be deemed to be a separate and distinct violation.

G16. PROPERTY RIGHTS

This permit does not convey any property rights of any sort, or any exclusive privilege.

G17. DUTY TO COMPLY

The Permittee must comply with all conditions of this permit. Any permit noncompliance constitutes a violation of the Clean Water Act and is grounds for enforcement action; for permit termination, revocation and reissuance, or modification; or denial of a permit renewal application.

G18. TOXIC POLLUTANTS

The Permittee must comply with effluent standards or prohibitions established under Section 307(a) of the Clean Water Act for toxic pollutants within the time provided in the regulations that establish those standards or prohibitions, even if this permit has not yet been modified to incorporate the requirement.

G19. PENALTIES FOR TAMPERING

The Clean Water Act provides that any person who falsifies, tampers with, or knowingly renders inaccurate any monitoring device or method required to be maintained under this permit must, upon conviction, be punished by a fine of not more than $10,000 per violation, or by imprisonment for not more than two (2) years per violation, or by both. If a conviction of a person is for a violation committed after a first conviction of such person under this Condition, punishment must be a fine of not more than $20,000 per day of violation, or by imprisonment of not more than four (4) years, or by both.

G20. REPORTING PLANNED CHANGES

The Permittee must, as soon as possible, give notice to Ecology and Health of planned physical alterations or additions to the permitted facility, production increases, or process modification which will result in: 1) the permitted facility being determined to be a new source pursuant to 40 CFR 122.29(b); 2) a significant change in the nature or an increase in quantity of pollutants discharged; or 3) a significant change in the Permittee's sludge use or disposal practices. Following such notice, this permit may be modified, or revoked and reissued pursuant to 40 CFR 122.62(a) to specify and limit any pollutants not previously limited. Until such modification is effective, any new or increased discharge in excess of permit limits or not specifically authorized by this permit constitutes a violation of the terms and conditions of this permit.

G21. REPORTING ANTICIPATED NON-COMPLIANCE

The Permittee must give advance notice to Ecology and Health by submission of a new application or supplement thereto at least 180 days prior to commencement of such discharges, of any facility expansions, production increases, or other planned changes, such as process modifications, in the permitted facility or activity which may result in noncompliance with permit limits or conditions. Any maintenance of facilities, which might necessitate unavoidable interruption of operation and degradation of effluent quality, must be scheduled during noncritical water quality periods and carried out in a manner approved by Ecology and Health.

G22. REPORTING OTHER INFORMATION

Where the Permittee becomes aware that it failed to submit any relevant facts in a permit application, or submitted incorrect information in a permit application, or in any report to Ecology, it must promptly submit such facts or information.

G23. COMPLIANCE SCHEDULES

Reports of compliance or noncompliance with, or any progress reports on, interim and final requirements contained in any compliance schedule of this permit must be submitted no later than 14 days following each schedule date.

APPENDIX A

Please see Section R2 of this permit for the parameters to be monitored.

The following table with analytical levels is to be used as guidance for reclaimed water monitoring. The objectives of this table is to reduce the number of analytical "non-detects" in monitoring reports and to measure concentrations near or below criteria values where possible at a reasonable cost. If a Permittee knows that an alternate, less sensitive method (higher DL and QL) is sufficient to produce measurable results in their effluent, that method may be used for analysis.

EPA 307 (A) REF. #	**Pollutant & CAS No.** ***(if available)***	**Recommended Analytical Protocol**	**Detection (DL)[1]** ***µg/L unless specified***	**Quantitation Level (QL)[2]** ***µg/L unless specified***	**Lowest Criteria Values** ***µg/L unless specified***
	Biochemical Oxygen Demand	SM5210-B		5 mg/L	
	Total Suspended Solids	SM2540-D		2 mg/L	
	pH	SM4500-H^+ B	N/A	N/A	
	Turbidity	Calibrated device		<0.1 NTU	
	Flow	Calibrated device	N/A	N/A	
	Dissolved Oxygen	SM4500-OC/OG		0.2 mg/L	
	Total Coliform	SM9222A		0 organisms	
	Total Chlorine Residual	SM4500 Cl G		50.0	7.5
	Total Ammonia (as N)	SM4500-NH3- GH		0.3 mg/L	
	Nitrate-Nitrite (as N)	SM4500-NO3- E/F/H		100	10,000
	Total Phosphorus (as P)	SM4500-PE/PF	100	100	

1. Detection level (DL) or detection limit means the minimum concentration of an analyte (substance) that can be measured and reported with a 99 percent confidence that the analyte concentration is greater than zero as determined by the procedure given in 40 CFR Part 136, Appendix B.
2. Quantitation Level (QL) is equivalent to EPA's Minimum Level (ML) which is defined in 40 CFR Part 136 as the minimum level at which the entire GC/MS system must give recognizable mass spectra (background corrected) and acceptable calibration points. These levels were published as proposed in the *Federal Register* on March 28, 1997.

Appendix C: Customer Outreach Summary Report

City of Bothell Reclaimed Water Demand & Acceptance

In-Depth Interview Summary Analysis

SUBMITTED: December 1, 2011

Data instincts
Public Outreach Consultants

239 Windsor River Road, Windsor, CA 95492
Phone: (707) 836-0300 Fax: (707) 836-0842

Contents

Executive Summary 1
Recommendations 2
1.0 Purpose & Objectives 4
1.1 Methodology 4
2.0 Core Findings 5
3.0 Organizations & People Interviewed 12
4.0 Discussion Guideline Questions 13

Executive Summary

This is part of an overall feasibility study being conducted by Kennedy Jenks Consulting and Data Instincts, Public Outreach Consultants to gauge interest in the use of reclaimed water. In-depth interviews were conducted among 31 people representing 15 organizations identified by the City of Bothell as potential reclaimed water customers, including six representatives from the City of Bothell. The interviews sought to determine the respondents' interest in switching to the use of reclaimed water, price expectations, concerns and attitudes, and to identify potential opportunities and/or barriers for the possible introduction of reclaimed water to the Bothell area.

The interviews revealed that most of the potential water customers interviewed are interested in switching to the use of reclaimed water for irrigation and/or industrial purposes. Nearly all envision using the water for landscape irrigation; several are also interested in using the water for industrial purposes. Other uses mentioned by some respondents included toilet flushing, heating/cooling systems and decorative fountains. No customers were interested in using the water for processes or production purposes.

For most, a primary motivator for using reclaimed water is the perceived environmental benefits: conservation, sustainability, being "green." Several of these organizations said they are committed to environmentally sensitive business practices and a few made no secret that they want their efforts to be visible and recognized by the public. Two organizations worried that using reclaimed water could potentially harm the environment; their chief concern being possible impacts of reclaimed water on nearby wetlands.

Though perceived environmental benefits play a big role in most respondents' desire to adopt the use of reclaimed water, cost of the water is the most important deciding factor for making the switch. Nearly all respondents agree that the water would have to be discounted from potable water rates in order to make the switch a viable option for their organizations.

There were varying opinions on how much the water should be discounted, but two potential high-volume users (landscape irrigation and industrial) had already performed some in-depth calculations to determine a price point that would make the switch to reclaimed water viable for their company; their conclusion was that a discounted rate of at least 30% off potable rates would make sense for their needs.

Besides the cost of water, other concerns or questions primarily focused on the following issues:

- Environmental benefits/impacts
- Public perception
- Cost of retrofitting (who will pay for it?)
- Quality of water/ Constituents in water

  - Health and safety
  - Effect on system and equipment
- Timeline of reclaimed water system going online

A few respondents were concerned using the water may affect their business in terms of customer, employee or tenant backlash regarding the health and safety of reclaimed water. Throughout the interviews, some respondents noted the need for a supporting public education effort that could include brochures and other informational items about the safety and benefits of reclaimed water that they could use to communicate with their own customers, employees, and the public.

Many respondents were anxious for more program information aimed at potential reclaimed water users. Specifically, they want to know more about the costs, project schedule, connection process, testing and monitoring, metering, and who pays for what.

Recommendations

It is recommended the City of Bothell continue the conversation with these respondents and other potential reclaimed water users. As part of this effort, there should be follow-up with regard to how much these potential customers will actually pay (or are willing to pay) for reclaimed water and clarification of who will be responsible for costs of installing and/or retrofitting their systems. Since this program would be new, reclaimed water customers will require help in understanding the project schedule, connection process, testing, and who pays for what, etc. Being responsive and guiding customers and potential customers through the connection process will be beneficial for them and supporting staff.

Ensure that the City of Bothell or King County (who ever the purveyor will be) is easy for potential reclaimed water customers to deal with; have dedicated staff that can focus on the initial needs of the reclaimed water customers and those considering using reclaimed water. Ensure potential customers know who their ongoing contact will be in regard to reclaimed water availability.

Identify "champions" in the community who support the reclaimed water program. Whether they are elected officials or proud customers who want to promote the greenness of using reclaimed water, it is desirable to have some proactive messaging even prior to implementing the new system.

Once the feasibility study is complete, the City of Bothell should make a decision as to providing reclaimed water quickly in order to inform developers within the downtown revitalization area whether to incorporate, or not, reclaimed water plumbing into their designs. Developers will need to know about guidelines for connecting to a reclaimed

water system as they are already in the planning stage. Time will be of the essence in order to incorporate purple pipes within the designs for the downtown revitalization effort.

The City of Bothell should consider phasing reclaimed water pipelines to build interest and feasibility. Areas close to the connection point at the North Creek Pump Station will be easy to connect, while areas further away may present challenges. However, conveyance pipes could be placed in the ground during the downtown revitalization effort and connected later for reclaimed water service. Placing pipes now would decrease the cost of placing pipes in the future by not having to excavate and re-pave streets.

A fill station seemed to be a very appealing way for customers to access reclaimed water because of low capital and connection cost. Potential customers can use as little or as much water as they desire with no capital investment. A potential fill station should be considered at the North Creek Pump Station to serve those customers with trucks.

If the City determines to move forward with a reclaimed water program, the City should consider the following public outreach activities;

- Develop a two-pronged reclaimed water education/informational program; one aimed at the general public and the other aimed at potential reclaimed water customers.

- Provide materials that reclaimed water customers could utilize at their business sites and in communications targeted to their own customers and employees. Materials could include on site signage, brochures and fact sheets that could be posted on the business's web site and in informational kiosks. Topics could include: reclaimed water quality, where else reclaimed water is used and acknowledge the benefits of reclaimed water.

- Consider reaching out to local business groups like the Bothell Business Park Association Board; make presentations in which you can answer questions and concerns people in the community may have as the reclaimed water program evolves. Consider holding a public project launch at a high profile public site to celebrate the system being activated. Invite all new customers and potential customers. Also, invite the public and elected officials.

1.0 Purpose & Objectives

To gather input from potential reclaimed water customers in order to determine their interest in using reclaimed water, their attitudes, perceptions and knowledge of reclaimed water and the feasibility of introducing reclaimed water to businesses and organizations in the City of Bothell, in-depth interviews (IDIs) were conducted among 34 people representing 14 organizations the week of November 7, 2011. Specifically, the interviews sought to:

- determine the current perceptions of reclaimed water;
- learn the initial potential reclaimed water customer reactions to using reclaimed water, concerns about constituent perceptions, and possible barriers;
- determine reclaimed water cost expectations and test sensitivity to various price points; and,
- answer questions and respond to incorrect perceptions directly with potential customers during interviews.

The selected organizations represent potential reclaimed water customers who would be average/typical users, high-volume water users and the City of Bothell, which would act as a wholesaler of reclaimed water provided by King County.

1.1 Methodology

The IDI technique was employed for this effort. This investigative technique uses a one-on-one or small group approach to information gathering, which allows for a free and open exchange.

Because of the study sample size and recruitment techniques employed, it should be understood that the IDI technique seeks to develop deeper insights into and understanding of the people and issues involved, but the findings are not scientific or statistically applicable to a larger population.

2.0 Core Findings

Reclaimed Water Knowledge

2.1. All water customers interviewed get their water from the City of Bothell via Seattle Public Utilities and though all consider their current source to be a reliable one, nearly all say they would consider another source if it were available. The primary drivers for considering other sources appear to be doing what is right for the environment and potentially lowering their water costs.

2.2. Many of those interviewed said they knew at least something about Bothell's reclaimed water feasibility study. Nearly all who were familiar with the study said King County or the City of Bothell were among their primary information sources. Other sources mentioned included the local city council and residents/public.

2.3. The majority said they have some initial concerns about the City's reclaimed water feasibility study. These concerns included:

- Ability to use water in their system (i.e., cooling towers)
- Economic feasibility of potential reclaimed water program
- Cost of construction (system)
- Public safety
- Impact on businesses that use the water due to public perception
- Rates/costs of water
- Who else will be using the water
- Location of pipelines
- Potential impacts from water on nearby wetlands
- Aesthetics of Reclaimed Water (Smell, Color, etc.)
- Quality of water for industrial purposes

Reclaimed Water Perceptions

2.4. All respondents felt that having some businesses using reclaimed water for irrigation or industrial purposes would have an overall positive effect on the entire community; this appears to be primarily driven by the perception that reclaimed water is a long-term solution for conservation, environmental protection and sustainability.

"We would like to see things done in different ways, to help protect the environment."

"This could make our processes more environmentally friendly."

2.5. All respondents interviewed also felt the use of reclaimed water for irrigation or industrial purposes would have an overall positive effect on their business or operations. Again, conservation, environmental protection and sustainability were primary drivers as was the notion that customers/tenants/the public would appreciate the company's "green" efforts; but some also pointed out that it would be important to educate their customers and the public about reclaimed water in order to prevent any potential adverse reaction.

"Depending on how it is presented to them, our tenants would see it as a positive; they like greener changes."

"We want to be seen as reusing this resource. We are proactively looking at sustainable practices."

2.6. A few also noted that the price of the water, retrofitting costs and potential disruption of operations are also major factors in whether switching to reclaimed water would be positive or negative for their business.

"It would be environmentally friendly; but, in the end, it all comes down to the cost."

2.7. City of Bothell representatives felt that having some businesses using reclaimed water for irrigation or industrial use could have a negative or challenging impact on their operations; cited as factors for this opinion were the expense of training and managing another utility infrastructure, loss of potable water revenue in exchange for lower priced reclaimed water, and additional O&M for maintaining a new system.

2.8. About half of those interviewed were aware that reclaimed water is already used in the county or state to irrigate some public areas. Many of those who were not aware, were not surprised to learn of current reclaimed water usage in the area and some have heard of it used elsewhere in the United States.

2.9. That King County and the City of Bothell together will take responsibility for the safety and delivery of reclaimed water for approved uses made nearly all respondents feel more positive about the use of reclaimed water. However two said it made them feel less positive and another two said the statement makes no difference in how they feel about the use of reclaimed water.

2.10. Among those who take comfort in the two agencies taking responsibility for the safety and delivery of reclaimed water for approved uses, many said it sounds like a promise for consistent water quality and delivery standards. Some noted feeling more comfortable with their relationships with either the City or the County and their level of trust could depend on which agency they would primarily be required to interface with. City representatives noted an

appreciation that the County would handle the metering, but they point out that the City must maintain the system and the quality of the metering system.

2.11. The knowledge that reclaimed water can be a more reliable water source than potable water, especially during a drought year or in the face of changing regulatory requirements, made nearly all respondents feel more positive about the use of reclaimed water, primarily because they need water year round to keep their landscaping green or to run their industrial processes. Several said the reliability made no difference in their feelings toward the use of reclaimed water because they have not seen much in the way of drought.

Decision Making and Rate Sensitivity

2.12. When asked if there had been any discussion within their organization regarding the use of reclaimed water, the majority answered in the affirmative. Some of the specific topics of discussion included:

- Costs of water
- The desire to decrease water costs and energy usage
- Where or how the water has been used before
- How organization could use the water
- The desire of the organization to "go green"
- (City) What to charge for the water; what to use it for; what is the value proposition?

2.13. When asked if they would face any predominant concerns in making the decision to use reclaimed water, here is what emerged:

- Price of water
- Water quality
- Safety
- Reliability
- Public perception
- Costs for retrofitting system
- Ongoing O&M costs
- Potential impacts on equipment
- Costs for additional treatment internally, if necessary
- Timeline, especially with respect to current design phases taking place
- (City) Price to City and what to charge customers; safety and cross-connection prevention; public perception

2.14. Nearly all respondents said the cost of the water would be a major factor in their decision to switch to the use of reclaimed water and most expected the price of

reclaimed water to be lower than that of potable. Only one respondent thought the water would be priced higher than potable and a few were unsure.

2.15. If rates for reclaimed water were the same as for potable, respondents are fairly evenly divided between being either less interested or having their interest level remain unchanged. Only one respondent said they would be more interested in reclaimed water at this price point.

2.16. More became interested at a discounted rate of 10 to 20 percent below that of potable water. Two specifically mentioned 30% off potable and that they arrived at that rate after internal evaluations. The level of interest for nearly all respondents heightened at the greater discount levels. Nearly all said they would be more interested in using reclaimed water if it was discounted by 30 to 50 percent of potable rates.

2.17. When asked if they could set the rate themselves, what they think would be reasonable for the City of Bothell to expect and still motivate them to consider using reclaimed water, here is how they responded:

- 10% off potable rates
- 15% to 25% off potable rates
- 20% off potable rates
- 30% off potable rates if there are no capital costs; 40% if there are capital costs
- 30% to 50% off potable rates
- No more than potable
- Reduce the hook-up fee to zero and discount the water
- (City) 20% off the potable rate; would want County to pay O&M

2.18. One potential high-volume user (landscape irrigation and industrial) had already performed some in-depth calculations to determine a price point that would make the switch to reclaimed water viable for the company; their conclusion was that a discounted rate of at least 30% off potable rates would make sense for their needs.

2.19. When all respondents were asked if there were any other incentives, besides cost, that would make them consider switching to reclaimed water, here is what they said:

- Being "green"; environmental /sustainability benefits (doing the right thing)
- Seasonal reliability
- Good water quality
- Additional training for staff
- Professional public information/education effort; support from utilities
- Grant opportunities

- Ability to include reclaimed water in educational curriculum (college)
- A onetime incentive toward connecting
- Payment like Puget Sound Energy (pay for the first month)
- (City) support from County on public and customer education

2.20. Regarding environmental benefits, throughout the interview, the representatives of a few organizations expressed concerns about the potential impacts of reclaimed water on nearby wetlands.

2.21. Respondents were asked what else they would need to know before deciding to use reclaimed water. Here are some of their specific comments:

- Will additional treatment be needed before introducing the water into our process or systems? Adaptability for use in industrial processes (need a sheet that shows what constituents are in the water)
- Can it be used for fire sprinklers?
- Is the water safe?
- Are toilet flushing and landscaping on the same meters?
- Is there a connection fee?
- Can it be used in swimming pools?
- How would metering and billing work?
- Need to understand the tradeoffs: environmental, safety, health risks
- How to maintain difference in system piping.
- What are the terms of agreement
- Environmental impacts of irrigating with reclaimed water
- How monitoring will be done
- Return on investment
- Timeline of reclaimed water system going online
- What do regulators (DOH/DOE) need to see to approve reclaimed water systems (maintain physical separation from any potable systems)?
- (City) Economic impact; what the wholesale cost will be from the County

2.22. The following are ways in which the interviewed organizations say they might use reclaimed water:

Beneficial Use	**Number of Organizations**
Landscape irrigation	13
Toilet flushing	8
Building heating or cooling	8
Decorative fountains	6
Industrial/process	3
Steam heating	2
Other	4

2.23. A large majority of potential landscape users think using reclaimed water for irrigation could affect their businesses in beneficial ways among their employees, customers and tenants. Some note the positive aspect of being "green" and doing right by the environment; others mention concerns about public perception, water quality and safety.

2.24. Only a few of potential landscape users say they do not have current landscape drawings or schematics and nearly all have a site manager.

2.25. Two potential industrial users believed using reclaimed water for industrial purposes could affect their businesses. One was a food processor that was not interest in use for processing; the other was particularly concerned about potential effects to their equipment and current water processes. Nearly all of them have current schematics or drawings of how their systems work and nearly all have records of how much water they use in these systems, but most did not have that information available during the interview. A couple noted they have given that information to the County.

2.26. All potential customers were asked about the decision-making process and who was the primary decision-maker when it comes to switching to reclaimed water. Some have a simple decision-making process with one owner and maybe a few advisors. Others have more complicated structures involving senior executives (some in other locations or states), boards, or multi-agency structures.

2.27. Nearly all respondents would prefer to receive project information and updates via e-mail; a couple said that receiving updates via phone would work, too.

Final Thoughts

2.28. As the interviews closed, respondents were asked if they had any new questions or concerns about reclaimed water or its availability in their area. Here is a sampling of their comments as captured by the interviewers:

- *Who uses it? What other campuses in Washington use reclaimed water? We would want to conduct workshops for irrigation and boiler use; we may have complaints about irrigation, but not for broiler. Are there grant programs to help pay for capital costs? We want technical experts to help out. Want to create bond between facilities & structures, help with studies and classroom learning.*
- *Interested in using for irrigation, water features & cooling towers. Might be interested in using for process water but we have a lot more questions and concerns for that use: monitoring, reliability, consistent level of quality,*

internal costs, costs of the water. We would like to consider process water separately from other uses.

- *Will it clog the irrigation system? Does it smell? Will it have the microbial growth in a closed loop cooling system? What is the timeline?*
- *Very interested – if we do not have to pay construction cost and the rate is lower than potable.*
- *How soon would a decision be made? We don't expect to be in construction until late 2012 or 2013. What design consideration should be incorporated if the water will be available?*
- *You should get next generation help with total marketing, get parents involved. Provide branding and positioning; educate kids so they help educate parents.*
- *Would need to look at how much meter cost is to offset RW savings in water.*
- *Will cost of plumbing break even to cost savings? Maybe need additional incentive for toilet flushing.*
- *Is there any way to measure what percentage goes out so we are not charged for what goes out? Utility could provide an incentive for what goes up in steam. (Would like to deduct evaporation water from sewer charge)*

Final comments from MacDonald-Miller

- *Customers need to know specific costs and be able to amortize them over time for investment purposes.*
- *Want energy district to be cost neutral and carbon neutral. Want to co-locate pipe – same cost. Would want pipe to run to downtown first. Would want to expand to business parks, Seattle times & University of Washington.*

Final comments from City of Bothell

- *The wholesale rate from King County to the City of Bothell is key to making the whole effort pencil out. We could be competing against ourselves by replacing potable customers with reclaimed water customers at lower rates. We could inadvertently be reducing revenues to the city while spending even more to deliver reclaimed water.*
- Other concerns expressed included; *Health standpoint, non potable uses as target, public perception, and education. Protection of public water system, no cross connections. Environmental concerns, such as run off quality. How to deliver the water to participating facilities? What is the treatment level? What is King County going to bring to negotiation? How will the County support capital costs incurred by others?*

3.0 Organizations & People Interviewed

Name	*Company*	*Title*
Margie Mcoy	AT & T	Facilities Manager
Anne Heartsong	Bothell Business Park	AEA Accounting and Management Services (Owner)
Eric Campbell	CamWest Development	President
Meagan Walker	Cascadia Community College	Director of College Relations
Dee Sliney	Cascadia Community College	Director of Facilities Services and Sustainability
Terrie Battuello	City of Bothell	Assistant City Manager/Economic Development Manager
Ted Stonebridge	City of Bothell	Water & Sewer Supervisor
Nik Stroup	City of Bothell	Parks, Streets, Water, Sewer, and Storm Operations Superintendent
Clark Meek	City of Bothell	Facilities & Parks Capital Projects Manager
Pat Parkhurst	City of Bothell	Recreation & Fleet Manager
Don Feine	City of Bothell	Utility Manager
Steve Ellis	General Dynamics	Supervisor, Test Lab & Model Shop
Perry England	MacDonald-Miller Facility Solutions	VP Building Performance
Mario Espinoza	McMenamins	Architect (Ankrom Moisan Associated Architects)
Eric Blohm	MOHR Partners	Managing Partner
Danny Shaeffer	Northwest Naturals	VP of Operations
Jennifer Elling	Northwest Naturals	Operations Manager
Courtney Doolin	Northwest Naturals	Food Safety Supervisor
Dawnelle Simon	Schnitzer West	Assistant Investment Manager
Chuck Friend	Schnitzer West	Chief Engineer
Jon Ellis	Seattle Times	Facilities Manager
Kevin Markert	Seattle Times	Systems Engineering, Technology and Projects Manager
Jonathan Tolton	Seattle Times	Director of Production and Plant Operations
James Reid	T-Mobile	Facilities Manager, Data Center
Tony Guerrero	University of Washington, Bothell	Director of Facilities Services and Physical Plant Manager
Kelly Snyder	University of Washington, Bothell	Director of Government and Community Relations
Bryan Park	Village Center Senior Housing Downtown Developer	Financial Planner
Greg Sparhawk	Washington Complete Construction	Architect
Robert Johnseine	Washington Complete Construction	Senior Director of Design & Construction
Gordon Guthrie	Waterside Asset Management	Sr. Vice President
Kyran Hynes	Weidner Apartment Homes	Senior Finance & Acquisitions Specialist

4.0 Discussion Guideline Questions

Name: _____ Date: _____

<u>Group: Bothell Potential Reclaimed Water Customers – Industrial/Commercial</u>

1. What is your current water source? (What utility?)

2. Is your current water source reliable?

   - ❑ Yes
   - ❑ No. Why not?
   - ❑ Depends/Don't know

3. If a new water source were available, would you consider using it?

   - ❑ Yes. Why?
   - ❑ No. Why not?
   - ❑ Depends/Don't know

4. Would you say you know a lot, a little, or almost nothing about Bothell's reclaimed water feasibility study?

   - ❑ A lot
   - ❑ A little
   - ❑ Almost nothing

   } Ask Q5&6

   - ❑ Nothing ——— Skip to Q7

5. Do you have any initial concerns about Bothell's reclaimed water feasibility study?

   - ❑ No
   - ❑ Yes. What are they?

6. What have been your primary sources of information about the study?

   - ❑ King County? Bothell? Staff/Utilities Department
     - To whom did you speak? _____
   - ❑ Economic Development
   - ❑ Local City Council
   - ❑ Water Purveyor: _____
   - ❑ Newspaper
   - ❑ Radio
   - ❑ Television
   - ❑ Web/Internet (Specify site) _____
   - ❑ Friends/Neighbors
   - ❑ Other _____

7. Do you think having some businesses using reclaimed water for irrigation or industrial use would have an overall positive or negative effect on the entire community?

   - ❑ POSITIVE: In what way?

   - ❑ NEGATIVE: In what way?

8. Do you think having some businesses using reclaimed water for irrigation or industrial use would have an overall positive or negative effect on your business or operations?

   - ❑ POSITIVE: In what way?

   - ❑ NEGATIVE: In what way?

9. Are you aware that reclaimed water is already used in the county (or Washington State) to irrigate public areas such as the Sounders practice soccer field at Starfire Sports Complex in Tukwila, at the Brightwater site in Woodinville, King Conservation District's wetland plant nursery, and the Snoqualmie Ridge Golf Course.

   - ❑ Yes
   - ❑ No

10. King County and Bothell together will take responsibility for the safety and delivery of reclaimed water for approved uses. Does that statement make you feel more positive, less positive or not make any difference in your feelings about the use reclaimed water?

    - ❑ More positive. Why: _____
    - ❑ Less Positive. Why: _____
    - ❑ No Difference. Why: _____
    - ❑ Unsure/DK

11. Reclaimed water can be a more reliable water source than potable water, especially during a drought year or in the face of changing regulatory requirements. Does that statement make you feel more positive, less positive or not make any difference in your feelings about the reclaimed water program?

    - ❑ More positive. Why: _____
    - ❑ Less Positive. Why: _____
    - ❑ No Difference. Why: _____
    - ❑ Unsure/DK

12. Reclaimed water may be available in your area in the future; has there been any discussion in your organization about using reclaimed water?

    - ❑ Yes.
      12A. What has been the nature of that discussion?

    - ❑ No.
      12B. Why not?

13. If your company were to use reclaimed water, in which of the following ways would it be used: landscape irrigation, and/or industrial purposes?

    - ❑ Landscaping irrigation
    - ❑ Industrial/Process
    - ❑ Building Heating and/or Cooling
    - ❑ Steam Heating
    - ❑ Toilet Flushing
    - ❑ Decorative Fountains
    - ❑ Agricultural
    - ❑ Other mentions _____

14. Are there any predominate concerns your organization would face in making the decision to use reclaimed water?

    - ❑ No
    - ❑ Yes. **14A.** What are they?

        - ❑ Price of water
        - ❑ Safety
        - ❑ Reliability
        - ❑ Other _____

15. Would you expect reclaimed water to be priced higher, the same or lower than potable water (**OR** name their own water source from question #1)?

    - ❑ Higher
    - ❑ Same
    - ❑ Lower
    - ❑ Unsure/DK

16. Would the cost of the water be a major factor in your decision of whether or not to use it, a minor factor, or not a factor at all?

    - ❑ Major
    - ❑ Minor
    - ❑ Not a factor
    - ❑ Unsure/DK

17. If I told you the rates for reclaimed water would be the same as those for potable water, would you be more or less interested in switching to reclaimed water, than you were before?

    - ❑ More
    - ❑ Less
    - ❑ Same
    - ❑ DK

18. If I told you the rates for reclaimed water rates were 10% to 20% less than those for potable water; would you be more or less interested then?

    - ❑ More
    - ❑ Less
    - ❑ Same
    - ❑ DK

19. How about if reclaimed water rates were 30% to 40% less than those for potable water; would you be more or less interested then?

    - ❑ More
    - ❑ Less
    - ❑ Same
    - ❑ DK

20. How about if reclaimed water rates were 50% less than those for potable water; would you be more or less interested then?

    - ❑ More
    - ❑ Less
    - ❑ Same
    - ❑ DK

21. If you could set the reclaimed water rate yourself, what do you think would be reasonable for the City of Bothell to expect and would still motivate you to consider using reclaimed water? _____

22. Roughly, how much do you think you pay on an annual basis for potable water?

    $_____

23. Besides cost, are there any other incentives that would make you consider switching to reclaimed water?

    - ❑ No
    - ❑ Yes. **23A.** What are they?

24. In deciding to use reclaimed water, what else would you need to know?

25. Who are the primary decision-makers in your organization as to whether or not your organization could, or will, switch to reclaimed water? **(If not this person, get name/contact information).**

(Ask Q26 – Q28 only if respondent mentioned "Landscape" in question 13)

26. Do you think using reclaimed water for **landscape irrigation** might affect your business (among your employees/customers/tenants)?

    - ❑ No
    - ❑ Yes. **26A**. How?

27. Do you have current landscape drawings or schematics?

    - ❑ Yes.
    - ❑ No

28. Do you have a site manager for your landscaping?

    - ❑ No
    - ❑ Yes. What is the primary language they speak? _____

(Ask 29-31 only if respondent mentioned "Industrial" in question 13)

29. Do you think using reclaimed water for **industrial purposes** might affect your business (among your employees/customers/equipment)?

    - ❑ No
    - ❑ Yes **31A.** How?

30. Do you have current drawings or schematics of how your water system works?

    - ❑ Yes
    - ❑ No

31. Do you know how much water you use for this purpose?

    - ❑ No
    - ❑ Yes. **33A.** How much? _____

32. Now, after having this conversation, do you have any new questions or concerns about reclaimed water or its availability in your area?

33. King County wants to keep businesses and residents informed about this project as it is being implemented. How would you like to receive information about this project?

❑ Web ❑ E-mail* ❑ Phone* ❑ Mail* ❑ Fax ❑ Newspaper

❑ TV ❑ Radio ❑ Other

*Get contact information, if appropriate

Appendix D: Customer Metering Technical Memorandum

Kennedy/Jenks Consultants

200 S.W. Market Street, Suite 500
Portland, Oregon 97201
503-295-4911
FAX: 503-295-4901

Technical Memorandum No.1 Draft Reclaimed Water Customer Metering Technical Memorandum

24 May 2011

Prepared for

King County Wastewater Treatment Division
201 South Jackson Street;
Suite 500
Seattle, WA 98104-3855

K/J Project No. 1097002.04

Table of Contents

List of Tables ..... *II*

List of Appendices ..... *II*

Executive Summary ..... *III*

Section 1: Introduction and Background 1

1.1 Background 1
1.2 Reclaimed Water Metering Requirements 2
1.3 Reclaimed Water Customer Meters Considered 2
1.4 ANSI/AWWA Meter Standards 3
1.5 Meter Manufacturers Contacted By Kennedy/Jenks 3

Section 2: Reclaimed Water Meter Types 5

2.1 Displacement Meters (ANSI/AWWA C700-09) 5
2.2 Multijet Meter (ANSI/AWWA C708-05) 6
2.3 Turbine Meters (ANSI/AWWA C700-07) 6
2.4 Magnetic Flow Meter (Flows conform to ANSI/AWWA C701) 7
2.5 Compound Meters (ANSI/AWWA C702-01) 8

Section 3: Alternatives Evaluation 9

3.1 Alternative Evaluation Methodology 9
3.2 Low Flow Metering Alternative Evaluation 9
3.2.1 Summary of Evaluation 10
3.3 High Flow Metering Alternative Evaluation 11
3.3.1 Summary of Evaluation 12
3.4 Variable Flow Metering (0.5-2000 GPM) 12
3.4.1 Summary of Evaluation 13
3.5 Remote Meter Reading Considerations 13

Section 4: Conclusions and Recommendations 14

Section 5: Meter Standard Details and Specifications 16

5.1 Standard Details 16
5.2 Standard Reclaimed Water Metering Specification 16

List of Tables

E.1 Recommended Meters by Customer Type
1 ANSI/AWWA Meter Standards
2 Displacement Meter Characteristics
3 Turbine Meter Characteristics
4 Magnetic Flow Meter Characteristics
5 Compound Meter Characteristics
6 Low Flow Meter Alternative Comparison
7 High Flow Meter Alternative Comparison
8 Variable Flow Meter Alternative Comparison
9 Recommended Meters by Customer Type

List of Appendices

A Displacement Meter Cut Sheets
B Turbine Meter Cut Sheets
C Magnetic Flow Meter Cut Sheets
D Compound Meter Cut Sheets
E Alternative Analysis Guidelines
F Radio Frequency Meter Reading Systems Cut Sheets
G Reclaimed Water Meter Standard Details
H Reclaimed Water Meter Specification

Executive Summary

Introduction

Kennedy/Jenks consultants, Inc (Kennedy/Jenks) was contracted by King County Department of Natural Resources Resource Recovery Section (County) to evaluate alternatives and develop standards for metering Brightwater Wastewater Treatment Plant (WWTP) reclaimed water customers under Kennedy/Jenks' contract with the County for Work Order Based Engineering Services for the Water Reuse Work Program. Initially the County anticipates serving six customers with an anticipated range of metered flows of less than 10 gallons per minute (GPM) to greater than 700 gallons per minute (GPM). The scope of work for this project involves two phases:

1. **Alternatives Evaluation Phase** – This phase involves review of AWWA standards typically used for water meters, meter manufacturers, and meter alternatives; evaluation of meters; and recommendation of appropriate types of meters for the specific flow ranges anticipated for the County's customers.

2. **Meter Standards Development Phase** – This phase involves development of standard details and a CSI-based metering specification based on the recommendations from the Alternatives Evaluation Phase. The standard details and specification will be a complete package for installation of meters and construction with no need for additional engineering design work. The standard drawings and specifications shall be a complete package to be used for issuing a work order for construction.

Meter Requirements

Potential County reclaimed water customers were categorized by flow range to facilitate meter selection as follows:

- **Low Flow Systems** – Customers anticipated to have consistently lower flows requiring metering in the range of 0 - 80 GPM

- **High Flow Systems** – Customers anticipated to have consistently higher flows requiring metering in the range of 80 - 2,000 GPM

- **Variable Flow Systems** – Customers that will have a highly variable range of flows requiring accurate metering between 0 and 2,000 GPM.

Additional requirements of the meters include the following:

- Meters must be capable of remote reading by County operations staff (i.e. "radio read")

- Meters will be competitively bid and at least three meter manufacturers shall be identified.

Meter Types and Manufacturers Evaluated

Based on Kennedy/Jenks' reclaimed water experience and review of AWWA standards, five types of meters were considered for the metering flow categories including:

- Displacement Meters (ANSI/AWWA C700-09)
- Multijet Meters (ANSI/AWWA C708-05)
- Turbine Meters (ANSI/AWWA C700-07)
- Magnetic Flow Meters (Flows conform to ANSI/AWWA C701)
- Compound Meters (ANSI/AWWA C702-01).

Three different meter manufacturers were contacted for the meter evaluation including Sensus Technologies, BadgerMeter and Elster Amco.

Upon initial evaluation, multijet meters were eliminated due to the potential for increased maintenance in a reclaimed water application. Displacement meters, Turbine meters, Magnetic Flow Meters and Compound Meters were fully evaluated.

Meter Alternative Evaluation Methodology

Reclaimed water meter selection was based upon the following evaluation methodology:

- Meter Flow Range, Accuracy and Pressure Drop
- Meter Cost and Useful Service Life
- Ongoing Meter Calibration Requirements
- Operations and Maintenance Considerations.

Table E.1 presents the results of the reclaimed water meter evaluation and summarizes meter recommendations based upon customer type.

Table E.1: Recommended Meters by Customer Type

Customer Type	Recommended Meter Type	Cost	Service Life	Rational
Low Flow (0 - 80 GPM)	Displacement	$175-$500	10 - 15	Lowest Capital Cost
High Flow (80 - 2000 GPM)	Turbine	$1,100-$3,000	10	Lowest Capital Cost & Largest Flow Range
Variable Flow (0 - 2000 GPM)	Compound	$1,400-$5,300	10	Widest Flow Range for metering lower flows

Conclusions and Recommendations

Kennedy/Jenks' conclusions from the customer metering alternatives evaluation are summarized below.

- Standard water meters are effective in applications for metering Class A quality reclaimed water that will be produced at the Brightwater WWTP.
- All meters and types meeting ANSI/AWWA standards have a useful service life of approximately 10 years, with the exception of smaller displacement meters that can be useful for 15 years and magnetic flow meters that may operate well for up to 20 years.
- All meters proposed for the various flow ranges provide the same accuracy of 100% of metered flow +/- 1.5%.
- Displacement meters provide the best value for metering low flow customers due to their low capital cost, high accuracy, and minimal maintenance requirements.
- Turbine meters provide the best value for metering high flow customers with flows consistently between 80 and 2,000 GPM due to their low capital cost and accuracy over a wide flow range.
- Compound meters are the highest cost metering option, but provide the best accuracy for metering highly variable flows from 0 to 2,000 GPM.
- All meter manufacturers consulted offer remote radio meter reading. Final selection of the data receiver system specification will be made after further discussion with County staff.

Kennedy/Jenks' recommended meter types for low flow, high flow and variable flow applications are:

1. Kennedy/Jenks recommends a Displacement Meter (5/8-inch to 2-inch) for reclaimed water customers with low flows in the range of 0 to 80 GPM as governed by ANSI/AWWA C700-09.
2. Kennedy/Jenks recommends a Turbine Meter or Compound Meter (2-inch to 6-inch) for reclaimed water customers with higher flows in the range of 80 to 2,000 GPM or highly variable flows as governed by ANSI/AWWA C701-07 and ANSI/AWWA C702-01, respectively.
3. The County may want to consider standardizing on a compound meter for higher or variable flows since it is anticipated that the County will initially be purchasing and maintaining the meters and it would reduce the amount of spare parts and spare meters required for maintenance and replacement.
4. Kennedy/Jenks recommends the meter manufacturers to be listed in the standard reclaimed water meter specification include Sensus Technologies, BadgerMeter and Elster AMCO. Each of the radio read systems for these three manufacturers are interchangeable with each other with some parts replacement.

5. Due to the number of meters the Brightwater Reclaimed Water System will be initially monitoring, Kennedy/Jenks recommends Radio Frequency Meter Reading. Each of the meter manufactures provides a similar system. Final selection of the data receiver system will be made after further discussion with County Staff.

Section 1: Introduction and Background

Kennedy/Jenks Consultants, Inc. (Kennedy/Jenks) was contracted by King County Department of Natural Resources Resource Recovery Section (County) to evaluate alternatives and develop standards for metering Brightwater Wastewater Treatment Plant (WWTP) reclaimed water customers. This evaluation is conducted under Kennedy/Jenks' contract with the County for Work Order Based Engineering Services for the Water Reuse Work Program. This study will include an evaluation of meter options for flows ranging from approximately 1 gallon per minute (GPM) to 700 GPM, or greater.

The purpose of this evaluation is to:

1. Select meter types and manufacturers for the proposed reclaimed water flow range

2. Develop preliminary standard details for meter installations that will accurately meter the proposed range of reclaimed water service flows

3. Develop a standard specification for reclaimed water customer meters in Construction Specifications Institute (16 Division) format.

The scope of work for this project involves two distinct phases:

Alternatives Evaluation Phase. The first phase of the project that is the focus of this technical memorandum involves the presentation of AWWA standards typically used for water meters in the United States, meter manufacturers and options, evaluation of meters and recommendations of appropriate types of meters for the specific flow ranges anticipated for the County's customers.

Meter Standards Development Phase. The second phase of the project involves the development of standard details and specifications for the recommended meter options from the Alternatives Evaluation Phase. The standard details and specification will be a complete package for installation of meters and construction with no need for additional engineering design work. The standard drawings and specifications shall be a complete package to be used for issuing a work order for construction.

1.1 Background

King County has initially identified six potential reclaimed water customers for connection to the Brightwater reclaimed water system. These initial customers are largely located in the Sammamish Valley area and will primarily use reclaimed water for irrigation of golf course and parks irrigation as well as a potential nursery operation. In addition, communities like the Cities of Bothell and Redmond are considering reclaimed water opportunities that would be served through a "master" connection to the Brightwater reclaimed water system.

It is anticipated that all connections to the Brightwater reclaimed water system would have a meter installation meeting the reclaimed water metering standards and specifications presented in this technical memorandum. However, other cities and water districts may use their own meter standards downstream of the reclaimed water connection point to the Brightwater reclaimed water system that falls out of the King County juristiction.

1.2 Reclaimed Water Metering Requirements

Metering requirements for reclaimed water flow metering have generally been divided into three customer types:

1. **Low flow:** flows typically in the range of 0 to 80 gallons per minute (GPM)
2. **High flow:** flows typically exceeding 80 up to or greater than 2,000 GPM
3. **Variable flow:** flows that have a broad range from 0 GPM up to or greater than 2,000 GPM.

These flow ranges are approximate and meters should be selected based on the minimum accuracy for a full range of flows required by the County and sized by an engineer licensed to practice in the State of Washington.

Following is a summary of requirements for reclaimed water customer flow meters:

- Meters shall provide for accurately metering the full range of flows for a specific installation, which may range from less than 1 GPM to greater than 700 GPM
- Meter standards shall accommodate service sizes ranging from 5/8 inches for low flow installations up to 6 inches for high or variable flow installations
- Meters shall have a minimum 98.5% accuracy for the full range of reclaimed water flows anticipated at the service connection with minimal maintenance and replacement requirements
- Meters shall have remote reading capability and digital information transfer to facilitate customer invoicing by the County
- It is desired that the meters have the ability track cumulative total usage over time and instantaneous peak flow rates
- A minimum of three meter manufacturers should be included for each type of meter included in the standard specification, but the types of meters to be used by the County should ultimately be standardized through a competitive selection process completed independent of this evaluation.

1.3 Reclaimed Water Customer Meters Considered

Kennedy/Jenks evaluated five types of meters for the use of customer reclaimed water metering including:

- Displacement Meters
- Multijet Meters
- Turbine Meters

- Magnetic Flow Meters
- Compound Meters.

The following section summarizes ANSI/AWWA standards applicable to the selected meter types and goes on to describe the characteristics of each meter type.

1.4 ANSI/AWWA Meter Standards

The American National Standards Institute (ANSI) and American Water Works Association (AWWA) have set forth standards for water meters for cold, potable water applications that are transferable for metering in applications with high quality reclaimed water (i.e. Class A) that will be produced at the Brightwater Wastewater Treatment Plant (Brightwater WWTP). For reclaimed water systems, the meter register covers have a special purple register as well as labeling to signify the water is non-potable.

Table 1 summarizes the applicable ANS/AWWA standards governing the various types of meters commonly available, each with its own applicability for specific meter applications. These types of meters will be considered in the alternatives evaluation for the types of flow demands identified in the table.

Table 1: ANSI/AWWA Meter Standards

Standard	Meter Type	Meter Size Range	Comments
ANSI/AWWA C700-09 [(a)]	Displacement	½ – 2 inch	Lower flow applications
ANSI/AWWA C701-07[(b)]	Turbine	3/4 – 20 inch	Low to high flow applications
ANSI/AWWA C702-01	Compound	2 – 8 inch	Multiple meters to measure variable flows
ANSI/AWWA C708-05	Multijet	5/8 – 2 inch	Lower flow applications

Notes:
(a) Bronze body and most common residential meter type in the United States.
(b) Magnetic flow meters reference the flow requirements in ANSI/AWWA C701-07

Abbreviations:
ANSI American National Standards Institute
AWWA American Water Works Association

1.5 Meter Manufacturers Contacted By Kennedy/Jenks

For the purposes of this alternatives evaluation, information was requested from the following meter manufacturers to evaluates costs, benefits and performance:

- Sensus Technologies
- BadgerMeter
- Elster AMCO.

This is not a comprehensive list of manufacturers and Kennedy/Jenks anticipates the County will ultimately standardize on a preferred meter manufacturer through a competitive procurement process consistent with County policies and procedures.

Section 2: Reclaimed Water Meter Types

This section contains a summary of the types of meters that could potentially be selected by the County for metering reclaimed water customers. The information presented includes meter sizes available, flow range, accuracy, headloss (pressure drop), cost and anticipated useful service life.

2.1 Displacement Meters (ANSI/AWWA C700-09)

There are two common types of displacement water meters: Oscillating Piston (Sensus SR Meters and Elster-AMCO Positive Displacement meters); and Nutating Disk/wobble plate (BadgerMeter Recordall Meters). Both types of displacement meters rely on water physically displacing a fixed measuring element in direct relation to the volume of water that passes through the meter, providing high accuracy at low to moderate flow rates.

Displacement water meters typically measure cold water flow in one direction on residential and small commercial applications with pipe sizes ranging from 5/8-inch to 2-inch in diameter. They are limited to water temperatures not exceeding 80 degrees Fahrenheit (^{o} F) and service pressures of less than 150 pounds per square inch (psi). Built-in strainers are typically included in these meters to protect the measuring element from debris, which can be an important consideration for some reclaimed water metering applications.

Table 2 summarizes characteristics for Sensus SR displacement meters by meter size. BadgerMeter and Elster-AMCO have similar design criteria. For reference, Sensus, BadgerMeter and Elster-AMCO cutsheets are included in Appendix A.

Table 2: Displacement Meter Characteristics

Meter Size	Continuous Flow Range (GPM)	Maximum Flow (GPM)	Register Accuracy (%)	Max. Pressure Drop (psi)	List Price ($)	Service Life (Years)
5/8-inch	1-10	20	Flow +/-1.5%	10.8	$175	15
1-inch	3-25	50	Flow +/-1.5%	10.9	$250	15
1 ½-inch	5-50	100	Flow +/-1.5%	11.4	$350	10
2-inch	8-80	160	Flow +/-1.5%	12.1	$500	10

Notes

1. Meters should only be exposed to peak demands for brief periods of time.
2. Meters should not be operated on a continuous basis at flows greater than half of their maximum capacity

Displacement meters should only be operated at continuous flows of half their maximum rated capacity, with meters exposed to peak flows for brief periods of time. For the size ranges listed, the meters have an accuracy of measured flow +/- 1.5% and maximum pressure drops of between 11 and 12 psi. Maintenance service requirements are minimal with meter replacement required approximately every 15 years for meters of 1-inch and smaller and every 10 years for meters that are 1 ½-inch to 2-inch. There are no annual operation and maintenance

requirements for servicing or calibration although cleaning of strainers may be periodically required.

Displacement meters typically are not practical in large commercial applications in which a high flow rate or low pressure loss is anticipated because these meters require all water to flow through the meter in order to rotate the piston or disk.

2.2 Multijet Meter (ANSI/AWWA C708-05)

Multijet meters are typically used in residential and commercial applications in a size range of 5/8-inch to 2-inch diameter. These meters use multiple ports to create jets of water against an impeller. The rotation of the impeller is correlated to the velocity of the water flow. Although multijet meters are very accurate at low flow rates, they are not used in higher flow applications as they don't have the axial flow path needed for high flow rates in larger pipe diameters.

In discussions with manufacturers, Kennedy/Jenks has found that multijet meters are not commonly installed in reclaimed water applications due to the potential for the jets clogging over time. Therefore, multijet meters are eliminated as a viable alternative.

2.3 Turbine Meters (ANSI/AWWA C700-07)

Turbine type water meters typically measure flow on large commercial and fire protection lines 1-1/2-inch to 12-inch and larger. They are used, in some cases, as master meters for water distribution systems. Turbine type meters accommodate higher flow rates and produce less pressure loss than displacement type meters as the flow passes axially through the meter; in addition, the meter does not drastically constrict the flow path of water to it. Turbine meters conform to AWWA specification C701.

Turbine meters are limited to water temperatures not exceeding 150° F and service pressures of less than 200 psi. Built-in strainers are typically included in these meters to protect the measuring element from debris that could affect it.

Table 3 summarizes design criteria for Sensus OMNI turbine meters by meter size. BadgerMeter and Elster-AMCO have similar design criteria. For reference, Sensus, BadgerMeter and Elster-AMCO turbine meter cutsheets are included in Appendix B.

Table 3: Turbine Meter Characteristics

Meter Size	Continuous Flow Range (GPM)	Maximum Flow (GPM)	Register Accuracy (%)	Max. Pressure Drop (psi)	List Price ($)	Service Life (Years)
1 1/2-inch	1.25-160	200	Flow +/-1.5%	12	$1,100	10
2-inch	1.5-200	250	Flow +/-1.5%	13	$1,300	10
3-inch	2.5-500	650	Flow +/-1.5%	10	$1,750	10
4-inch	3-1000	1250	Flow +/-1.5%	14	$2,000	10
6-inch	4-2000	2500	Flow +/-1.5%	14	$3,000	10

Turbine meters should only be operated at rated continuous flows, with the meter only exposed to peak flows for brief periods of time. For the size ranges listed, the meters have an accuracy of measured flow +/-1.5% and maximum pressure drops of between 10 and 14 psi. Maintenance service schedules are minimal with meter replacements required approximately every 10 years. There are no annual operation and maintenance schedules required either for servicing or calibration, although cleaning of strainers may be periodically required.

Both displacement meters and turbine meters are suitable to measure flows for 1 ½ inch to 2-inch services. However, unless the meter is required to withstand pressures of greater than 150 psi, displacement meters offer the same level of accuracy for less than 25% of the cost of a turbine meter.

2.4 Magnetic Flow Meter (Flows conform to ANSI/AWWA C701)

Magnetic type meters are velocity meters that use electromagnetic properties to determine the velocity of the water. In comparison, turbine and displacement meters use mechanical means to measure velocity. Magnetic flow meters can use either AC or DC power from line or battery to operate the electromagnets. There are no interior moving parts within the magnetic flow meter which allow it to measure flow in either direction. Strainers are not required upstream since there is no mechanical measuring element to get clogged or damaged by debris, and magnetic flow meters have no pressure drop. Magnetic flow meters conform to the flow requirements of ANSI/AWWA specification C701, however they do not have a specific ANSI/AWWA specification.

Magnetic flow meters typically measure cold water flow with pipe sizes ranging from 3-inch to 20-inch diameters. They are limited to water temperatures not exceeding 158° F and service pressures of less than 175 psi. Magnetic flow meters come with a fully electronic register that runs off of a low power consumption battery. Battery life ranges from 8 to 15 years. Maintenance consists of annual inspections of the measuring tube for deposits or abrasions and checking battery life. Manufacturers do not specify a replacement schedule for magnetic flow meters; however, due to their lack of moving parts, replacement of the meters is assumed to be needed between 15 and 20 years.

Table 4 summarizes Sensus accuMag meter characteristics by meter size. BadgerMeter and Elster-AMCO have similar design criteria. For reference, Sensus, BadgerMeter and Elster-AMCO magnetic flow meter cutsheets are included in Appendix C.

Table 4: Magnetic Flow Meter Characteristics

Meter Size	Continuous Flow Range (GPM)	Maximum Flow (GPM)	Register Accuracy (%)	List Price ($)	Battery Replacement Schedule (Years)	Service Life (Years)
3-inch	2.8-720	900	Flow +/-1.5%	$2,300	8-15	15-20
4-inch	5-1250	1560	Flow +/-1.5%	$2,600	8-15	15-20
6-inch	11-2850	3560	Flow +/-1.5%	$4,500	8-15	15-20

Notes

1. Magnetic flow meters require annual service inspection to check battery life.
2. Magnetic flow meters do not have any pressure drop.

2.5 Compound Meters (ANSI/AWWA C702-01)

Compound meters are used in cold water applications where the range of flows is so large that two different meters are required. Compound meters consist of two measuring devices and a check valve to regulate flow between them contained within a single assembly. At high flow rates, flow is diverted to a turbine meter for measurement. When flows drop below the range of accuracy for the turbine meter, the check valve closes to divert water to a low-flow displacement meter. Compound meters conform to AWWA C702 Class II.

Although compound meters are sold by BadgerMeter and Elster-AMCO, Sensus has replaced their compound meters with a new generation of meters that uses floating ball technology. This provides the same turn down ratio as a compound meter (about 1000 to 1) with only one moving part instead of two different meters separated by a check valve. This newer meter is referred to as the OMNI C^2.

Compound meters typically measure cold water flow with pipe sizes ranging from 1.5-inch to 8-inch diameters. They are limited to water temperatures less than 150°F and service pressures of less than 200 psi. Separate strainers are typically installed upstream of these meters to protect the measuring element from debris that could affect it.

Table 5 summarizes characteristics for the Sensus OMNI C^2 compound meters by meter size. BadgerMeter and Elster have similar design criteria; however, they still rely on traditional compound meters separated by a check valve. For reference, cut sheets from Sensus, BadgerMeter and Elster and provided in Appendix D.

Table 5: Compound Meter Characteristics

Meter Sizes	Continuous Flow Range (GPM)	Maximum Continuous Flow (GPM)	Register Accuracy (%)	Max. Pressure Drop (psi)	List Price ($)	Service Life (Years)
2-inch	0.5-160	160	Flow +/-1.5%	6.5	$1400	10
3-inch	1-400	500	Flow +/-1.5%	5	$1800	10
4-inch	1.5-800	1000	Flow +/-1.5%	9	$3100	10
6-inch	3-1600	2000	Flow +/-1.5%	9	$5300	10

Compound meters should only be operated within the given continuous flow ranges listed in the table. Meters should be exposed to peak flows for brief periods of time. For the size ranges listed, the meters have an accuracy of Flow +/-1.5% and maximum pressure drops of between 5 and 9 psi. Maintenance service schedules are minimal with routine services scheduled for approximately every 10 years. There are no annual operation and maintenance schedules listed for servicing or calibration of the meter, although cleaning of strainers may be periodically required.

Section 3: Alternatives Evaluation

3.1 Alternative Evaluation Methodology

The methodology for the customer meter alternatives evaluation was developed based upon guidelines presented in the January 2008 Wastewater Treatment Division (WTD) "Information Needs for Completing Alternatives Analysis and Predesign." These guidelines are included in Appendix E and list 36 different evaluation criteria covering a broad range of project types and sizes. Because many of the criteria are not directly relevant to the reclaimed water customer metering alternatives evaluation, Kennedy/Jenks developed the following simplified list of criteria based upon the WTD guidelines:

1. **Meter Flow Range, Accuracy and Pressure Drop**

   - What is the expected accuracy of the meter for the flow range identified (low flow for a typical residential meter, high flow for a commercial service or variable flow for a broad range of flows)?

   - How well does the meter minimize pressure loss while providing the desired accuracy?

2. **Meter Cost and Useful Service Life**

   - What is the new cost of the meter and how does this compare with the flow range and accuracy?

   - What is the useful service life of the meter and how does this affect overall life cycle cost?

3. **Ongoing Meter Calibration Requirements**

   - How often will County staff be required to calibrate meters?

   - How do calibration requirements affect overall life cycle cost?

4. **Operations and Maintenance (O&M) Considerations.**

   - Can meter types be standardized to reduce requirements for stocking spare meters and parts?

   - Do meters have "remote read" capability? Remote read meters are safer for county staff to access, and minimize requirements for confined space entry.

3.2 Low Flow Metering Alternative Evaluation

A typical low flow application would be similar to residential meter for potable water applications. Flow would be in the range of 0-80 gallons per minute (GPM) in a range of meter sizes from 5/8-inch to 2-inch. The common types of meters used for this application and size

range include a displacement meter, turbine meter or a compound meter. Magnetic flow meters are typically not manufactured in these small ranges, and are not considered a viable option. Table 6 presents a comparison of design criteria for displacement, turbine and compound meters in the low flow metering sizes of 5/8-inch to 2 inch.

Table 6: Low Flow Meter Alternative Comparison

Design Characteristics	Displacement Meter	Turbine Meter	Compound Meter
Meter Size (inches)	5/8 - 2	1 ½ -2	2
Continuous Meter Flow Range (gpm)	1-80	1.25-200	0.5-160
Register Accuracy (%)	Flow +/- 1.5%	Flow +/- 1.5%	Flow +/- 1.5%
Maximum Pressure Drop (psi)	11-12	12-13	6.5
Meter Cost ($)	$175 - $500	$1,100 - $1,300	$1,400
Useful Service Life (years)	10 to 15	10	10
Annual Calibration	None	None	None
Remote Meter Read	Yes	Yes	Yes
Pros	• Lowest Capital Cost • Longest Service Life (smaller meters)	• Widest Flow Range	• Lowest Flow Measurement • Lowest Pressure Drop
Cons	• Smallest Flow Range • High Pressure Drop	• Highest Pressure Drop • High Capital Cost	• Highest Capital Cost

As presented in Table 6, operations and maintenance requirements are similar between all meter types. Meter sizes larger than one inch all have useful service lives of approximately 10 years (smaller meters can have a useful service life of up to 15 years). Each of the meters offer the same level of accuracy (the meter shall register not less than 98.5% and not more than 101.5% of the water that actually passes through it) and none require annual calibration.

3.2.1 Summary of Evaluation

For low flow metering requirements with consistent flows, displacement meters provide comparable accuracy to all other meters evaluated at the lowest capital cost, and are considered the best value alternative. Compound meters do offer the lowest flow measurement down to 0.5 gpm while maintaining a high level of accuracy and also minimize pressure drop, but high costs do not seem warranted when the same accuracy can be provided by a much less expensive displacement meter. Turbine meters are not recommended for the low flow application due to their higher capital cost and higher pressure drop compared to displacement meters.

3.3 High Flow Metering Alternative Evaluation

A higher demand user like a large commercial or industrial facility with consistently high reclaimed water demands in the range of 80-700 gpm or greater would require a larger 2-inch to 6-inch meter. Typical meters used for this type of application would be a turbine meter, magnetic flow meter or compound meter. Displacement meters are not practical in large commercial applications with high flow rates as these meters require all water to flow through the meter in order to rotate the piston or disk, and would have excessively high pressure loss.

Table 7 presents a comparison of design criteria for turbine, magnetic and compound meters in the high flow metering sizes of 2-inch to 6-inch.

Table 7: High Flow Meter Alternative Comparison

	Turbine Meter	**Magnetic Meter**	**Compound Meter**
Meter Size (inches)	2 - 6	3 -6	2-6
Continuous Meter Flow Range (gpm)	1.5-2000	2.8-720	0.5-1600
Register Accuracy (%)	Flow +/- 1.5%	Flow +/- 1.5%	Flow +/- 1.5%
Maximum Pressure Drop (psi)	12-14	0	5-9
Meter Cost ($)	$1,100 - $3,000	$2,300 - $4,500	$1,400 - $5,300
Useful Service Life (years)	10	15-20	10
Annual Calibration	None	Yes	None
Remote Meter Read	Yes	Yes	Yes
Pros	• Lowest Capital Cost • Widest flow range	• Longest Service Life • No Pressure Drop	• Lowest Flow Measurement • Low Pressure Drop
Cons	• Highest Pressure Drop	• Annual Maintenance Required • High Capital Cost	• Highest Capital Cost

As presented in Table 7, operations and maintenance requirements are similar between turbine and compound meter types with no annual maintenance and a useful service life of approximately 10 years. Turbine meters have the lowest capital cost, provide the widest range of flow measurement, but have the highest pressure drop across the meter. Compound meters have the lowest turndown to measure low flows, but also have the highest capital cost. Manufacturers do no list a useful service life for magnetic flow meters, but it is anticipated they will have a useful service life of 15 to 20 years so long as the required battery pack is checked at least annually.

3.3.1 Summary of Evaluation

For high flow metering applications with flows between 80 and 2,000 GPM, turbine meters appear to provide the best value, and are the recommended alternative. Turbine meters advantages include the lowest capital cost and no annual maintenance requirements, while providing comparable accuracy to other meters. While compound meters provide better accuracy for reporting lower flows, they are more expensive than turbine meters for a given meter size while providing the same level of accuracy. Therefore, compound meters are not recommended due to their higher capital costs. Magnetic flow meters are advantageous because they have no pressure drop and a higher anticipated useful service life, but also have higher capital costs and require a battery pack that needs to be maintained with no increase in accuracy. As a result, magnetic flow meters are not considered to be the best option for reclaimed water customer metering.

3.4 Variable Flow Metering (0.5-2000 GPM)

Some Brightwater reclaimed water customers may have highly variable flows from <1 GPM up to 700 GPM, or greater. These may include connections for the local communities like Bothell or Redmond, a large commercial or industrial facility with variable operations, or a large development project. Again, meters that are candidates for a variable flow range include turbine, magnetic and compound flow meters. Displacement meters are not manufactured to handle this higher range of flow required.

Table 8 presents a comparison of design criteria for turbine, magnetic and compound meters in the variable flow metering sizes of 2-inch to 6-inch.

Table 8: Variable Flow Meter Alternative Comparison

	Turbine Meter	**Magnetic Meter**	**Compound Meter**
Meter Size (inches)	2 - 6	3 -6	2-6
Continuous Meter Flow Range (gpm)	1.5-2000	2.8-720	0.5-1600
Register Accuracy (%)	Flow +/- 1.5%	Flow +/- 1.5%	Flow +/- 1.5%
Maximum Pressure Drop (psi)	12-14	0	5-9
Meter Cost ($)	$1,100 - $3,000	$2,300 - $4,500	$1,400 - $5,300
Useful Service Life (years)	10	15-20	10
Annual Calibration	None	Yes	None
Remote Meter Read	Yes	Yes	Yes
Pros	• Lowest Capital Cost • Widest flow range	• Longest Service Life • No Pressure Drop	• Lowest Flow Measurement • Low Pressure Drop
Cons	• Highest Pressure Drop	• Annual Maintenance Required • High Capital Cost	• Highest Capital Cost

As presented in Table 8, operations and maintenance requirements are similar between turbine and compound meter types with no annual maintenance and a useful service life of approximately 10 years. Turbine meters have the lowest capital cost, provide the widest range of flow measurement, but have the highest pressure drop across the meter. Compound meters have the lowest turndown to measure low flows, but also have the highest capital cost. Manufacturers do no list a useful service life for magnetic flow meters, but it is anticipated they will have a useful service life of 15 to 20 years so long as the required battery pack is checked at least annually.

3.4.1 Summary of Evaluation

Of all meter types, compound meters are the ideal selection for variable flow metering as they can meter a wide range of flow and have the most accurate reporting at the low end of the flow range. However, due to their high capital costs, they are only competitive when the required metering flow range cannot be covered by a low flow displacement meter or high flow turbine meter. Turbine meters do not have the same level of turn down for measuring lower flows as compared to a compound meter. Magnetic flow meters require more annual maintenance than turbine and compound meters, and are therefore not recommended.

3.5 Remote Meter Reading Considerations

As noted in the overview of the O&M considerations evaluation criteria, County staff have indicated remote reading of Brightwater reclaimed water meters is preferable due to the potential remote locations of reclaimed water connections and proximity to local streets.

There are two remote reading options:

1. **Fixed Radio Frequency Systems** – Fixed Network type meter reading is accomplished by the use of FCC-Licensed Radio frequency, Cell, Local Area Network (LAN) or Wi-Fi technology to transfer meter data from the meter register to the County's computer directly, eliminating the need for personnel to spend time collecting meter readings. Fixed network monitoring systems have very high capital costs and typically used only in application where the system is monitoring thousands of meters and/or when monitoring multiple utilities simultaneously (Gas, Power, Water, etc.).

2. **Radio Frequency Meter Reading** – Radio frequency meter reading is accomplished by using radio frequency to transmit data from the meter register to a data receiver. The data stored on the receiver is then downloaded to a computer. Radio Frequency meter reading is appropriate for systems monitoring a smaller number of metered customers, and has capital costs of about $175 per meter plus the cost of the data receiver system. The cost for a data receiver is determined by the receiver options purchased and the range and speed in which data is to be collected. Data receiver costs range from as low as $3,000 (hand held receiver with about 50 feet of range) to over $15,000 (vehicle based receiver, long range, high travel speed collection).

Section 4: Conclusions and Recommendations

Kennedy/Jenks' conclusions from the customer metering alternatives evaluation are summarized below.

- Standard water meters are effective in applications for metering Class A quality reclaimed water that will be produced at the Brightwater WWTP.
- All meters and types meeting ANSI/AWWA standards have a useful service life of approximately 10 years, with the exception of smaller displacement meters that can be useful for 15 years and magnetic flow meters that may operate well for up to 20 years.
- All meters proposed for the various flow ranges provide the same accuracy of 100% of measured flow +/- 1.5%.
- Displacement meters provide the best value for metering low flow customers due to their low capital cost, high accuracy, and minimal maintenance requirements.
- Turbine meters provide the best value for metering high flow customers with flows consistently between 80 and 2,000 GPM due to their low capital cost and accuracy over a wide flow range.
- Compound meters are the highest cost metering option, but provide the best accuracy for metering highly variable flows from 0.5 to 2,000 GPM.
- All meter manufacturers consulted offer remote radio meter reading. Final selection of the data receiver system specification will be made after further discussion with WTD staff

Kennedy/Jenks' recommended meter types for low flow, high flow and variable flow applications are:

1. Kennedy/Jenks recommends a Displacement Meter (5/8-inch to 2-inch) for reclaimed water customers with low flows in the range of 0 to 80 GPM as governed by ANSI/AWWA C700-09.
2. Kennedy/Jenks recommends a Turbine Meter or Compound Meter (2-inch to 6-inch) for reclaimed water customers with higher flows in the range of 80 to 2,000 GPM or highly variable flows as governed by ANSI/AWWA C701-07 and ANSI/AWWA C702-01, respectively.
3. The County may want to consider standardizing on a compound meter for higher or variable flows since it is anticipated that the County will initially be purchasing and maintaining the meters and it would reduce the amount of spare parts and spare meters required for maintenance and replacement.
4. Kennedy/Jenks recommends the meter manufacturers to be listed in the standard reclaimed water meter specification include Sensus Technologies, BadgerMeter and

Elster AMCO. Each of the radio read systems for these three manufacturers are interchangeable with each other with some parts replacement.

5. Due to the number of meters the Brightwater Reclaimed Water System will be initially monitoring, Kennedy/Jenks recommends Radio Frequency Meter Reading. Each of the meter manufactures provides a similar system. For reference, Appendix F contains cut sheets on the radio frequency meter reading systems. Final selection of the data receiver system will be made after further discussion with County Staff.

Table 9 presents the results of the reclaimed water meter evaluation and summarizes meter recommendations based upon customer type.

Table 9: Recommended Meters by Customer Type

Customer Type	Recommended Meter Type	Cost	Service Life	Rational
Low Flow (0 - 80 GPM)	Displacement	$175-$500	10 - 15	Lowest Capital Cost
High Flow (80 - 2000 GPM)	Turbine	$1,100-$3,000	10	Lowest Capital Cost & Largest Flow Range
Variable Flow (0 - 2000 GPM)	Compound	$1,400-$5,300	10	Widest Flow Range for metering lower flows

Section 5: Meter Standard Details and Specifications

Based on the conclusions and recommendations, Kennedy/Jenks has developed standard details for the three recommended meter types along with a single standard specification covering all reclaimed water flow metering installations.

5.1 Standard Details

Three standard details for meter installations included in Appendix G. Each detail includes reclaimed water meter vault with sizing criteria, meter strainer, backflow prevention device, reclaimed water meter and appurtenances. All meter manufacturers require strainers upstream of the meter for device protection. These details reference other standard details provided by the County for review and coordination with the new standard details. The standard details are summarized as follows:

Detail 1: Reclaimed Water Meter Detail Low Flow Meter

Detail 2: Reclaimed Water Meter Detail High Flow Meter

Detail 3: Reclaimed Water Meter Detail Variable Flow Meter.

Detail numbers will be assigned by King County at a later time.

5.2 Standard Reclaimed Water Metering Specification

Specification 15410 for reclaimed water flow meters is included in Appendix H. The specification includes meter descriptions for low flow, high flow, and variable flow applications for Class A reclaimed water, as well as requirements for meter vaults, backflow prevention, and appurtenances such as meter strainers, pipe and fittings. The specification is coordinated with the three standard details prepared for reclaimed water meters as well as other County standard specifications.

Appendix A-F

Not included

Appendix G

Reclaimed Water Meter Standard Details

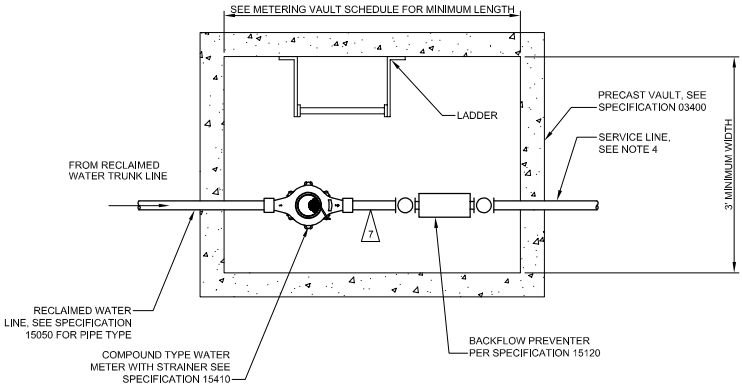

METERING VAULT PLAN 1 FIG1

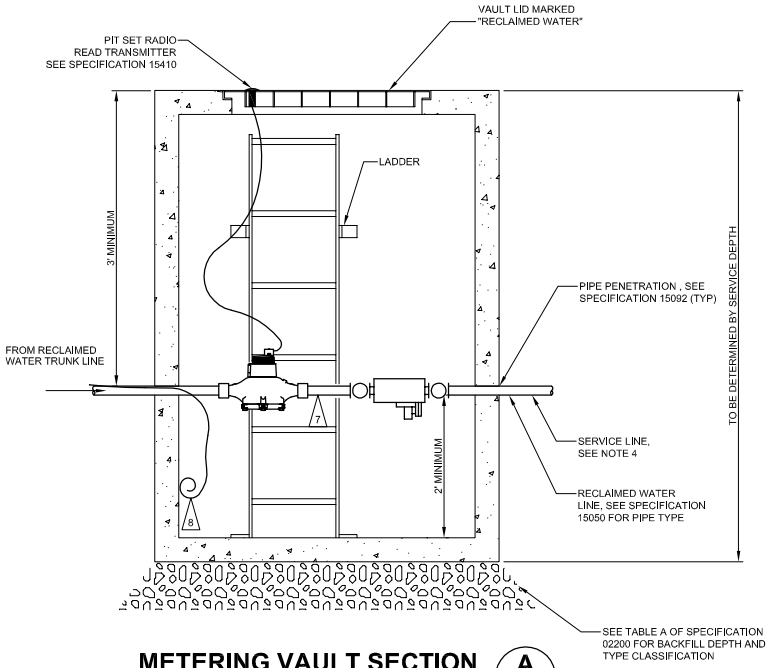

METERING VAULT SECTION A FIG1

METERING VAULT SCHEDULE	
METER SIZE	MINIMUM VAULT LENGTH
5/8"	48"
5/8x3/4"	48"
3/4"	48"
1"	54"
1-1/2"	60"
2"	66"

NOTES:

1. THIS DETAIL IS FOR METERS UP TO 1-1/2"
2. METER BOX MUST BE SET FLUSH WITH TOP OF CURB OR SIDEWALK, IF APPLICABLE
3. TRAFFIC LOADING BOX AND LID TO BE INSTALLED IN ALL DRIVEWAYS OR LOCATIONS WHERE VEHICULAR TRAFFIC MAY OCCUR, AND WHERE SPECIFIED ON PLANS.
4. AT A MINIMUM, EXTEND SERVICE LINE TO 12" BEYOND BACK OF METER BOX AND CAP. WHERE SIDEWALK IS BEING INSTALLED, EXTEND SERVICE LINE 12" BEYOND THE BACK OF THE SIDEWALK AND CAP.
5. MARK A "RW" ON CURB AT ALL RECLAIMED WATER SERVICES.
6. PIPE SUPPORTS NOT SHOWN, INSTALL SUPPORTS PER SPECIFICATION SECTION 15096.

7 PIPE SPOOL, LENGTH TO BE A MINIMUM OF 3 TIMES THE PIPE DIAMETER. PIPING TO BE TYPE "K" HARD TEMPER COPPER OR THREADED BRASS.

8 INSTALL TRACER WIRE WITH HDPE SERVICE, SIZE #12 AWG, WRAP 1 TIME AROUND TRUNK LINE CONNECTION EXTEND 2' COIL IN METER VAULT. DO NOT WRAP AROUND PIPE.

DRAFT

King County

DEPARTMENT OF NATURAL RESOURCES & PARKS / WASTEWATER TREATMENT DIVISION
STANDARD DETAILS

RECLAIMED WATER METER DETAIL
LOW FLOW METER

SCALE: NONE	DRAWN BY:
DETAIL NO:	
DATE: APRIL 2011	REVISION NO: 0

Filename: Figure1.dwg | Layout: Layout | Last Edited: 2011/Apr/19 11:06
Location: P:\cad\10\1097002.04-King_County_Water_Metering\

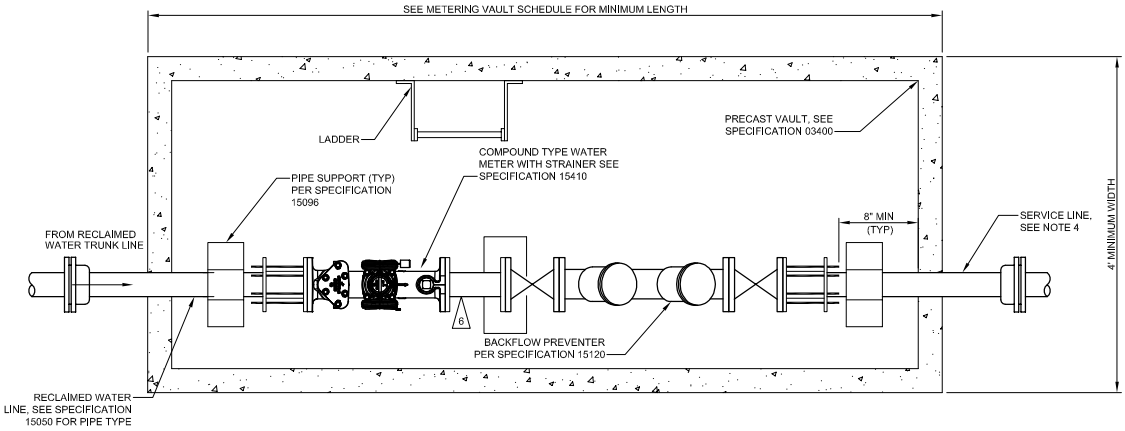

METERING VAULT PLAN (1 / FIG2)

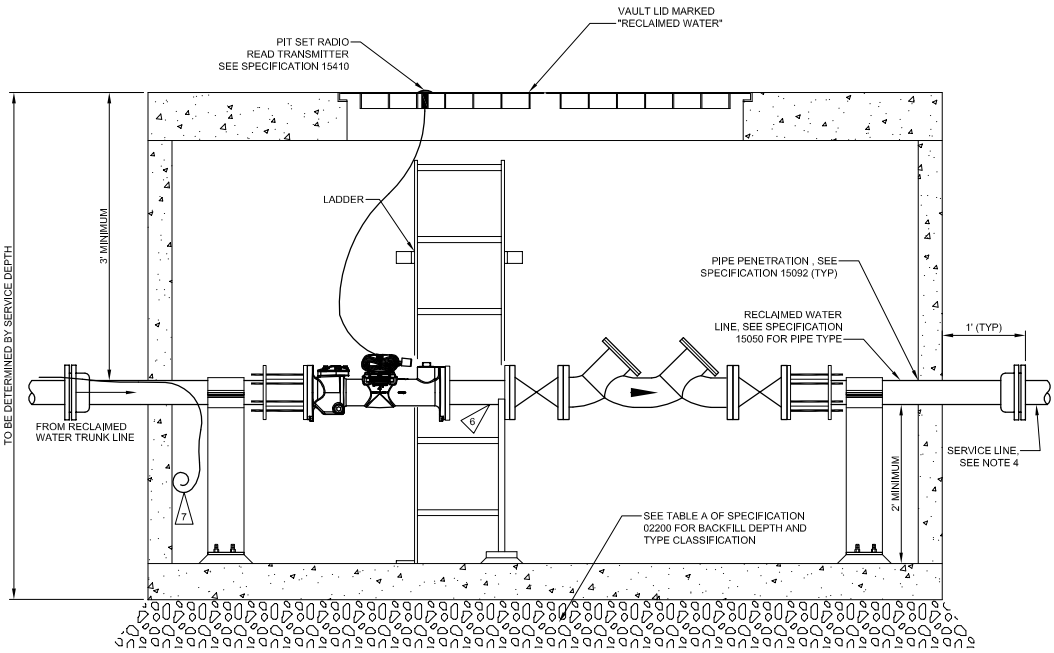

METERING VAULT SECTION (A / FIG2)

METERING VAULT SCHEDULE	
METER SIZE	MINIMUM VAULT LENGTH
2"	74"
3"	120"
4"	132"
6"	152"

NOTES:

1. THIS DETAIL IS FOR METERS OVER 1-1/2"
2. METER BOX MUST BE SET FLUSH WITH TOP OF CURB OR SIDEWALK, IF APPLICABLE
3. TRAFFIC LOADING BOX AND LID TO BE INSTALLED IN ALL DRIVEWAYS OR LOCATIONS WHERE VEHICULAR TRAFFIC MAY OCCUR, AND WHERE SPECIFIED ON PLANS.
4. AT A MINIMUM, EXTEND SERVICE LINE TO 12" BEYOND BACK OF METER BOX AND CAP. WHERE SIDEWALK IS BEING INSTALLED, EXTEND SERVICE LINE 12" BEYOND THE BACK OF THE SIDEWALK AND CAP.
5. MARK A "RW" ON CURB AT ALL RECLAIMED WATER SERVICES.

6 PROVIDE A MINIMUM STRAIGHT RUN 5 PIPE Ø UPSTREAM AND 3 PIPE Ø DOWNSTREAM. PIPING TO BE TYPE "K" HARD TEMPER COPPER OR THREADED BRASS BETWEEN METER AND BACKFLOW PREVENTER.

7 INSTALL TRACER WIRE WITH HDPE SERVICE, SIZE #12 AWG, WRAP 1 TIME AROUND TRUNK LINE CONNECTION EXTEND 2' COIL IN METER VAULT. DO NOT WRAP AROUND PIPE.

DRAFT

King County

DEPARTMENT OF NATURAL RESOURCES & PARKS / WASTEWATER TREATMENT DIVISION
STANDARD DETAILS

RECLAIMED WATER METER DETAIL
HIGH FLOW METER

SCALE: NONE	DRAWN BY:
DETAIL NO:	
DATE: APRIL 2011	REVISION NO: 0

Filename: Figure2.dwg | Layout: Layout | Last Edited: 2011/Apr/18 12:45
Location: P:\cad\10\1097002.04-King_County_Water_Metering\

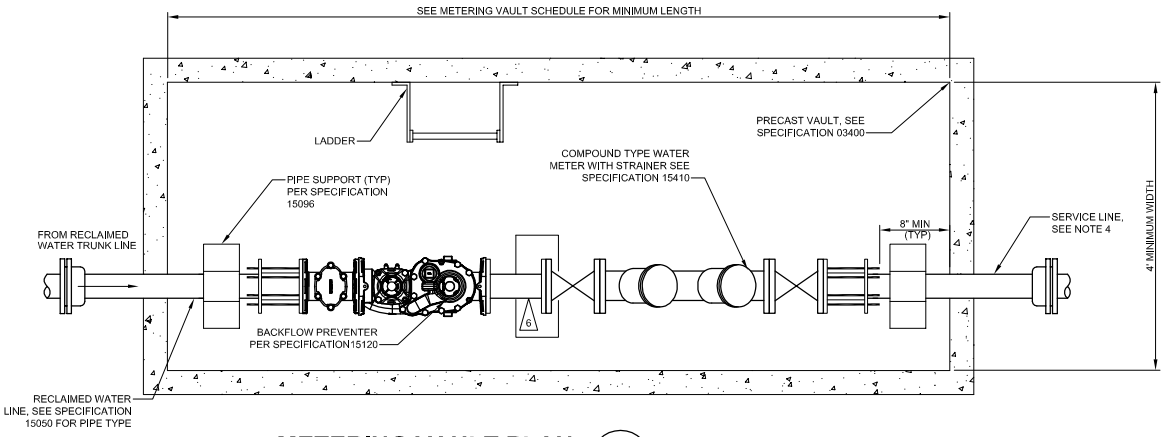

METERING VAULT PLAN (1 / FIG3)

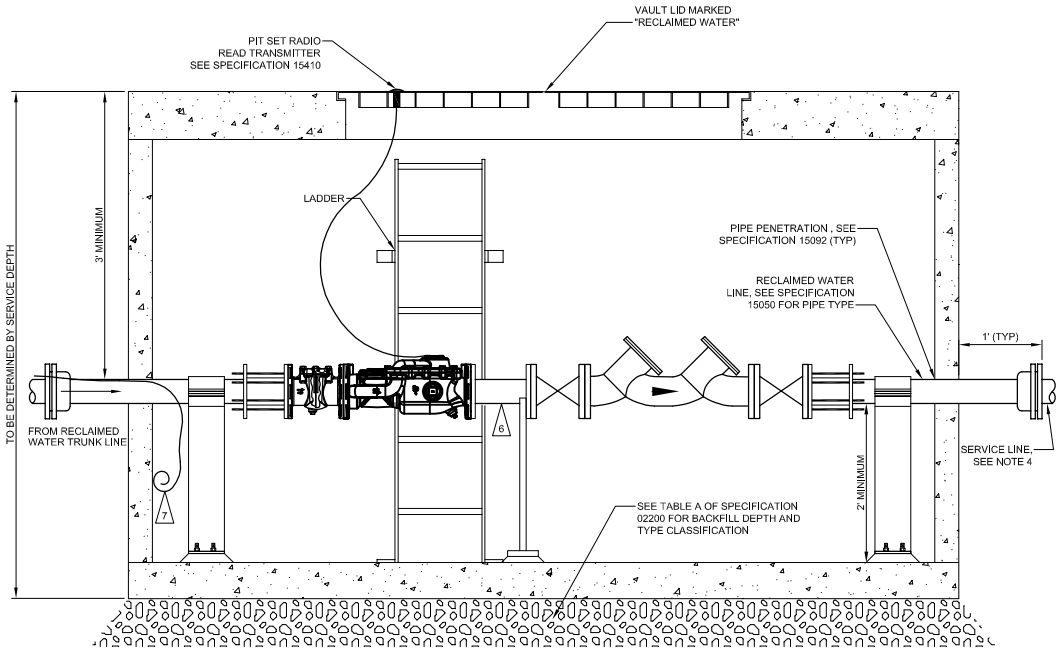

METERING VAULT SECTION (A / FIG3)

METERING VAULT SCHEDULE	
METER SIZE	MINIMUM VAULT LENGTH
2"	74"
3"	120"
4"	132"
6"	152"

NOTES:

1. THIS DETAIL IS FOR METERS OVER 1-1/2"
2. METER BOX MUST BE SET FLUSH WITH TOP OF CURB OR SIDEWALK, IF APPLICABLE
3. TRAFFIC LOADING BOX AND LID TO BE INSTALLED IN ALL DRIVEWAYS OR LOCATIONS WHERE VEHICULAR TRAFFIC MAY OCCUR, AND WHERE SPECIFIED ON PLANS.
4. AT A MINIMUM, EXTEND SERVICE LINE TO 12" BEYOND BACK OF METER BOX AND CAP. WHERE SIDEWALK IS BEING INSTALLED, EXTEND SERVICE LINE 12" BEYOND THE BACK OF THE SIDEWALK AND CAP.
5. MARK A "RW" ON CURB AT ALL RECLAIMED WATER SERVICES.

6 PROVIDE A MINIMUM STRAIGHT RUN 5 PIPE Ø UPSTREAM AND 3 PIPE Ø DOWNSTREAM. PIPING TO BE TYPE "K" HARD TEMPER COPPER OR THREADED BRASS BETWEEN METER AND BACKFLOW PREVENTER.

7 INSTALL TRACER WIRE WITH HDPE SERVICE, SIZE #12 AWG, WRAP 1 TIME AROUND TRUNK LINE CONNECTION EXTEND 2' COIL IN METER VAULT. DO NOT WRAP AROUND PIPE.

DRAFT

King County

DEPARTMENT OF NATURAL RESOURCES & PARKS / WASTEWATER TREATMENT DIVISION
STANDARD DETAILS

RECLAIMED WATER METER DETAIL
VARIABLE FLOW METER

SCALE: NONE	DRAWN BY:
DETAIL NO:	
DATE: APRIL 2011	REVISION NO: 0

Filename: Figure3.dwg | Layout: Layout | Last Edited: 2011/Apr/18 12:26
Location: P:\cad\10\1097002.04-King_County_Water_Metering\

Appendix H

Reclaimed Water Meter Specification

SECTION 15410

RECLAIMED WATER CUSTOMER METERS

PART 1 GENERAL

1.01 SUMMARY

A. This Section specifies requirements for Class A reclaimed water metering installation including, but not limited to, reclaimed water meters, reduced pressure principle backflow preventer, pre-cast utility vaults and appurtenances.

B. The work of the following Sections is related to the work of this Section. Other Sections, not referenced below, may also be related to the proper performance of this work. It is the Contractor's responsibility to perform all the work required by the Contract Documents.

1. Section 01300: Submittal Procedure
2. Section 01660: Equipment Testing, Training and Commissioning
3. Section 01720: Record Drawings and Information
4. Section 01730: Operation and Maintenance Information
5. Section 03400: Pre-cast Concrete Vaults
6. Section 09901: Finishes and Colors
7. Section 15050: Piping Systems
8. Section 15096: Pipe Hangers and Supports
9. Section 15120: Reduced Pressure Principle Backflow Preventers

1.02 REFERENCES

A. Referenced Standards: This Section incorporates by reference the latest revision of the following documents. It is a part of this Section as specified and modified. In case of conflict between the requirements of this Section and those of the listed documents, the requirements of this Section shall prevail.

B. American Water Works Association (AWWA), Standard Specifications:

1. C511: Reduced-Pressure Principle Backflow-Prevention Assembly
2. C700: Displacement Water Meters
3. C701: Turbine Water Meters
4. C702: Compound Water Meters
5. C800: Underground Service Line Valves and Fittings

C. American Society for Testing and Materials (ASTM), Standard Specifications:

D. American Association of State Highway and Transportation Officials (AASHTO), Standard Specifications for Highway Bridges.

E. Federal Specification: SS-S-210: Sealing Compound, Preformed Plastic, for Expansion Joints and Pipe Joints.

F. Washington State Department of Transportation (WSDOT), Standard Specifications for Road, Bridge and Municipal Construction 2010.

1.03 SUBMITTALS

A. Procedures: Section 01300.

B. Catalog cuts, Product Data and Shop drawings as required in Section 01720.

C. Calibration and Test Data per Section 01660.

D. Operation and Maintenance Information: per Section 01730.

1.04 WARRANTY

A. All products shall be subject to repair or replacement by the manufacturer in the event of failure of materials and/or faulty workmanship within a minimum of 12 consecutive months from the date of original installation.

PART 2 PRODUCTS

2.01 DISPLACEMENT METER

A. Use: Displacement Meters shall be used for all connections that are sizes 5/8-inch to 2-inch with a flow range of 0 to 80 GPM and an accuracy of 100% of measured flow +/- 1.5%.

Meter Size	Minimum Continuous Flow	Maximum Continuous Flow	Accuracy
5/8-inch	1 GPM	10 GPM	Flow +/- 1.5%
1-inch	3 GPM	25 GPM	Flow +/- 1.5%
1 ½ -inch	5 GPM	50 GPM	Flow +/- 1.5%
2-inch	8 GPM	80 GPM	Flow +/- 1.5%

B. Cases: All meters shall have a non-corrosive Water Works bronze (minimum 75% copper content) outer case with a separate measuring chamber which can easily be removed from the case. All meters shall have cast on them, in raised characters, the size and direction of water flow through the meter. Case iron frost bottoms, or bronze bottoms shall be provided on 5/8”, 3/4”, and 1” size meters. 1- 1/2” and 2” meters shall be the split case type with bronze lower and upper shell assemblies. The manufacturer’s serial number must be permanently affixed to the maincase to aid in identification and must be visible so that it can be read from directly above the meter.

C. External Bolts and Washers: All external bolts and washers shall be of corrosion resistant material and be easily removed from the maincase. All threaded maincase bolt holes must be covered, to aid in removal of the bolts for repair.

D. Register: The register must be of the straight reading type with a large red test or sweep hand. The numeral wheel assembly shall be located at the bottom of the dial face with reading obtained from left to right. The Register Capacity shall be 10,000,000 cubic feet with a sweep hand registry of 10 cubic feet. The register shall be in an oven cured can to prevent condensation. All reduction gearing shall be contained in a permanently hermetically sealed, tamperproof enclosure made from a stainless steel material, covered with a heat tempered glass lens.

E. The register shall be secured to the maincase by means of a locking device located in the interior of the meter so the register cannot be removed externally by non-utility personnel. An external register box assembly is not acceptable. The register must be covered so as to protect the register by a lid constructed of a copper based alloy or a suitable synthetic polymer. All meter registers shall be designed and constructed in a manner whereby no dirt, dust, water, moisture, or other foreign matter makes contact with the register. All registers shall be free of condensate and/or fogging. Register casing shall be purple to

distinguish reclaimed water meters from potable water meters.

F. Measuring Chamber: The measuring chamber shall be of Water Works bronze (minimum 85% copper content) or a suitable synthetic polymer and shall not be cast as part of the maincase. All piston assemblies shall be interchangeable in all measuring chamber assemblies of the same size. The measuring chamber shall be held in place without the use of fasteners.

G. The measuring chamber piston shall operate against a replaceable control roller, allowing for repair to AWWA standards. The control roller shall rotate on a stainless measuring chamber steel pin, to provide added strength, wear resistance and corrosion resistance. There shall be an elastomeric seal or seals between measured and unmeasured water, preventing leakage around the measuring element.

H. Magnetic Coupling: The motion of the piston will be transmitted to the sealed register through the use of a direct magnetic drive without any intermediate coupling.

I. Strainers: All meters must be provided with a corrosion resistant strainer which is easily removable from the meter without the meter itself being disconnected from the pipeline.

J. Change Gears: Change gears will not be allowed to calibrate the meter. All registers of a particular registration and meter size shall be identical and completely interchangeable.

K. Accuracy and Headloss Tests: Meters shall conform to current AWWA C-700, current revision, test flows, head loss and accuracy standards.

L. Pressure Capability: Meters shall operate up to a working pressure of 150 pounds per square inch (psi), without leakage or damage to any parts. Accuracy shall not be affected by variations in pressure up to 150 psi.

M. Connections: Meters shall have either external straight bronze threads conforming to ANSI B.1.20.1 or a two bolt oval flange connection of bronze or cast iron.

N. Shipment Verifications: A statistically controlled sample of each meter shipment will be tested by the utility to insure each shipment meets the utility performance and materials specifications.

O. Manufacturer: Sensus SR, Elster-AMCO C700, or BadgerMeter Recordall Disc Meter. No equal.

2.02 TURBINE METER

A. Use: Turbine Meters shall be used for all connections that are sizes 2-inch to 6-inch with a flow range of 80 to 2,000 GPM and an accuracy of 100% of measured flow +/- 1.5%.

Meter Size	Minimum Continuous Flow	Maximum Continuous Flow	Accuracy
2-inch	1.5 GPM	200 GPM	Flow +/- 1.5%
3-inch	2.5 GPM	500 GPM	Flow +/- 1.5%
4-inch	3 GPM	1000 GPM	Flow +/- 1.5%
6-inch	4 GPM	2000 GPM	Flow +/- 1.5%

B. Conformance to Standards: The meter package shall meet or exceed all requirements of ANSI/AWWA Standard C701 for Class II turbine meter assemblies. Each meter assembly shall be performance tested to ensure compliance.

C. Maincases: The meter maincase shall be of epoxy coated ductile iron or bronze composition. The epoxy coating shall be provided as standard fusion-bonded and adhere to NSF for nonlead regulation compliance. Bronze shall be WaterWorks or low-lead.

D. Measuring Chamber: The measuring chamber shall consist of a measuring element, spindles, gears and removable housing. Measuring chamber spindles shall be made of phosphor bronze, stainless steel, Monel, ceramic, or suitable synthetic polymer.

E. Direct Magnetic Drive System: The direct magnetic drive shall occur between the motion of the measuring element position and the register.

F. Register: The meter's register shall be gear driven or electronic with full seal and tamperproof design. The display of totalization shall be large and easy-to-read. Register casing shall be purple to distinguish reclaimed water meters from potable water meters. The Register Capacity shall be 10,000,000 cubic feet with a sweep hand registry of 10 cubic feet. The register shall be in an oven cured can to prevent condensation.

G. Maximum Operating Pressure: The meter assembly shall operate properly without leakage, damage, or malfunction up to a maximum working pressure of 150 pounds per square inch (psig).

H. Strainers: The meter strainer shall be integral and cast as part of the meter's maincase.

I. Straightening Vanes: The meter shall have a straightening vane assembly that shall be positioned directly upstream of the measuring element.

J. Connections: All meters will have a flanged connection conforming to Class 125, ANSI B16.1. Flanges for the 2" size meter assembly shall be of the 2-bolt oval flange or 4-bolt elliptical or round flange, configuration. The 3", 4" and 6" size meter assemblies shall be round type, flat faced flanges.

K. Certifications and Markings: All sizes of meter packages shall display the sizes, model, manufacturer name, and direction of flow. Such display shall be cast on the side of the meter maincase.

L. Manufacturer: Sensus OMNI T2, Elster-AMCO TS4000, or BadgerMeter Recordall Turbo Meter. No equal.

2.03 COMPOUND METER

A. Use: Compound Meters shall be used for all connections that are sizes 2-inch to 6-inch with highly variable flows that metering the following flow range with an accuracy of 100% of measured flow +/- 1.5%.

Meter Size	Minimum Continuous Flow	Maximum Continuous Flow	Accuracy
2-inch	0.5 GPM	160 GPM	Flow +/- 1.5%
3-inch	1 GPM	400 GPM	Flow +/- 1.5%
4-inch	1.5 GPM	800 GPM	Flow +/- 1.5%
6-inch	3 GPM	1600 GPM	Flow +/- 1.5%

B. Conformance to Standards: The meter package shall meet or exceed all requirements of ANSI/AWWA Standard C702 for Class II compound meter assemblies. Each meter assembly shall be performance tested to ensure compliance.

C. Maincases: The meter maincase shall be of epoxy coated ductile iron or bronze composition. The epoxy coating shall be provided as standard fusion-bonded and adhere to NSF for nonlead regulation compliance. Bronze shall be WaterWorks or low-lead.

D. Measuring Chamber: The measuring chamber shall consist of a measuring element, spindles, gears and removable housing. Measuring chamber spindles shall be made of phosphor bronze, stainless steel, Monel, ceramic, or suitable synthetic polymer.

E. Direct Magnetic Drive System: The direct magnetic drive shall occur between the motion of the measuring element position and the register.

F. Registers: The meter's registers shall be gear driven or electronic with full seal and tamperproof designs. The display of totalization shall be large and easy-to-read. Register casing shall be purple to distinguish reclaimed water meters from potable water meters. The Register Capacity shall be 10,000,000 cubic feet with a sweep hand registry of 10 cubic feet. The register shall be in an oven cured can to prevent condensation.

G. Maximum Operating Pressure: The meter assembly shall operate properly without leakage, damage, or malfunction up to a maximum working pressure of 150 pounds per square inch (psig).

H. Strainers: The meter strainer shall be integral and cast as part of the meter's maincase.

I. Straightening Vanes: The meter shall have a straightening vane assembly that shall be positioned directly upstream of the measuring element.

J. Connections: All meters will have a flanged connection conforming to Class 125, ANSI B16.1. Flanges shall be oval, elliptical or round, flat faced flanges.

K. Certifications and Markings: All sizes of meter packages shall display the sizes, model, manufacturer name, and direction of flow. Such display shall be cast on the side of the meter maincase.

L. Manufacturer: Sensus OMNI C^2, Elster-AMCO C4000/C3000, BadgerMeter Recordall or Compound Series Meter. No equal.

2.04 RADIO READ CAPABILITY

A. All meters shall be compatible with automatic meter reading (AMR) systems. Transmitters shall be manufactured to withstand indoor, outdoor and vault conditions subject to moisture and flooding. Transmitter shall be capable of connecting to a remote reading device via a radio signal and accurately sending the current meter reading. Manufacturer: Sensus RadioRead AMR, Elster-AMCO evolution, or BadgerMeter Orion. No equal.

2.05 BACKFLOW PREVENTER

A. Reduced pressure principle device consisting of two independently operating spring loaded check valves and one hydraulically dependent differential relief valve. Rated to 175 PSI working pressure and water temperature range from 32 to 140 degrees F. Backflow Preventer shall be in accordance with King County Standard Specification 15120. Manufacturer: 2-inch and smaller shall be Watts 009, no substitutions. 2 ½ inch and larger shall be ClaVal, Febco, Watts or equal.

2.06 METER VAULT AND LIDS

A. Design Criteria: ASTM C857, C858, and also:

1. Structure live load: AASHTO Loading Class HS 20-44.
2. Backfill material: Structural backfill.
3. Buoyancy: Design structure for groundwater up to grade.

B. Pre-cast Sections

1. Cement: ASTM C150, Type II, low alkali.
2. Roof slab openings: Size to support the frame and hatch covers.
3. Lifting eyes: Provide for each section.

4. Manufacturer: Utility Vault Company; Hanson Pipe and Pre-cast; or equal.

C. Sealant Gaskets: Preformed, continuous rope form plastic type protected by a removable two-piece wrapper conforming to Federal Specification SS-S-210. Type to be QUIKSEAL as supplied by Associated Concrete Products, RAM-NEK, or equal

D. Hatch Frames and Covers: ¼" aluminum diamond pattern plate with bituminous coating reinforced to support AASHTO H-20 wheel load access cover with anchor flange cast into Pre-cast vault top slab by Syracuse; Bilco; or equal. Equip with heavy forged 316 stainless steel anti-slam hinges, stainless steel pins, lift spring assist, and an automatic hold-open arm with a positive automatic latch that will secure the door in the open position until the release handle is activated.

E. Aluminum Ladder: Provide an OSHA approved aluminum 6061-T6 ladder within the valve vault as shown on the Drawings. Rails shall be 2-1/2-inch x 3/8-inch flat bar drilled or punched for insertion of 1-inch-diameter solid bar rungs. Rungs shall be welded to the outside and coated with epoxy based paint containing aluminum oxide grit by Wooster "Safe-Stride" Anti-slip paint; or equal. Brackets shall welded to the rails, spaced 8 feet on centers maximum for attachment to concrete or masonry with two 3/4-inch-diameter drilled concrete expansion anchor bolts at each connection.

F. Source Quality Control

1. Verify concrete compressive strength test results are satisfactory for the sections supplied.

2. State the curing method. Identify the start and end dates for the sections supplied.

3. Verify cast test bar tensile strengths are satisfactory.

4. Cast hatch frames so that it will drain to the outside of the vault. Hatch frames that don't drain to the outside of the vault will not be accepted.

2.07 APPURTANANCES

A. Pipe Supports: Install in accordance with specification section 15096.

B. Pipe and Fittings: Install in accordance with specification section 15050.

C. Reclaimed Water Identification: The reclaimed water meters shall be appropriately marked for reclaimed water application.

1. The reclaimed water meters shall have a lavender colored lid, shroud and register dial face with the word "RECLAIMED" engraved or cast on the meter housing and chamber and clearly printed on the register dial face and lid.

2. The non-potable water symbol shall be on the register lid.

PART 3 EXECUTION

3.01 INSTALLATION

A. Installation of Pre-Cast Utility Vaults

1. Install Pre-Cast Utility Vaults in accordance with King County Standard Specification 03400

2. Apply primer to joint surfaces in accordance with manufacturer's instructions. Make all joints watertight with sealant gaskets.

3. Accurately locate and place frames to within 1/8-inch vertical elevation in paved areas and to 1/2-inch in other areas. Coordinate the activities of all trades so

that this tolerance is achieved.

4. Install the hatch and machine if necessary to obtain a solid fit, without rattling under load. Verify all hatches fit properly in the frames. Ensure that the hatch frame drains to the outside of the vault.

B. Reclaimed Water Meter Installation: Meters shall be installed in a clean pipeline, free from foreign debris. The meter shall be installed with the direction of flow as indicated on the case. The meter shall be installed with 5 diameters upstream and 3 diameters downstream of undisturbed flow when using a strainer for turbine and compound meters. Refer to manufacture's installation instruction for further installation instructions.

C. Backflow Preventer shall be installed in accordance with manufacturer's specifications and King County Standard Specification 15120.

D. Pipe and Valve Identification

1. General: Identify all exposed piping in this project by painting, banding, system name labels, and direction arrows. Identify all buried and exposed valves with tags as specified below. All pipes and valves shall be purple to specify the contents as reclaimed water.

2. Exposed Pipe Identification: Before painting, banding and labeling, pipes shall be identified by the Contractor with temporary wired-on cardboard tags showing the proposed marking for review by the Engineer.

3. Valves: Provide each buried valve with a valve tag identifying the pipeline contents, and either its valve number, or the area or item served by the valve for valves without a valve number. Contents shall be as designated in the Piping Schedule.

3.02 TESTING

A. Test Pre-cast utility vaults in accordance with King County Standard Specification 03400.

B. Test Backflow Preventer in accordance with King County Standard Specification 15120.

C. Reclaimed Water Meter Testing:

1. Test in accordance with Manufacturers instructions.

2. King County reserves the option to test all meters in accordance with AWWA Manual M6. Meters that fail this test will be returned to the manufacturer, freight collect and the manufacturer will replace the defective meter(s) with new meter(s), freight prepaid within thirty (30) days from receipt of the defective meter(s).

3. A tag indicating the factory accuracy test results of the meter on low, intermediate and high flows shall accompany all meters.

END OF SECTION

Appendix E: Cost Estimates

Attachment 1

Cost Estimates

ENGINEER'S ESTIMATE OF PROBABLE COST **KENNEDY/JENKS CONSULTANTS**

Project: City of Bothell - Reclaimed Water Feasibility Study
Alternative A, Bothell BP and Seattle Times only

Prepared By: JEC
Date Prepared: Apr-12
K/J Proj. No.: 1197004
Current at ENR 9044.65

BID ITEM NO.	DISTRIBUTION AREA					TOTAL
1	**Backbone distribution system**					$ 481,115
2	**Meter Installation and Main Connection**					$ 169,300
3	**Private Side Connection**					$ 26,000
4	**North Creek Pump Station Improvements**					$ 117,585
Markups	Subtotals					$ 794,000
	Contractor General Conditions @	8.0%				$ 64,000
	Subtotals					$ 858,000
	Contractor Overhead and Profit @	12.0%				$ 103,000
	Subtotals					$ 961,000
	Sales Tax @	9.5%				$ 91,000
	Subtotals					$ 1,052,000
	Contingency @	35.0%				$ 368,000
	Engineer's Estimate of Probable Bid Price [1]					**$ 1,420,000**
	Engineering, Legal and Administrative Costs @	30.0%				$ 426,000
	TOTAL PROJECT COST					**$ 1,850,000**

NOTES:
(1) The accuracy of these estimates should be considered to be within -30% to +50% of the cost shown, consistent with An AACE Class 5 Order of Magnitude estimate.

ENGINEER'S ESTIMATE OF PROBABLE COST | **KENNEDY/JENKS CONSULTANTS**

Project: City of Bothell - Reclaimed Water Feasibility Study
Alternative B, Area 1 and Seattle Times

Prepared By: JEC
Date Prepared: Apr-12
K/J Proj. No.: 1197004
Current at ENR 9044.65

BID ITEM NO.	DISTRIBUTION AREA					TOTAL
1	**Backbone distribution system**					$ 797,715
2	**Meter Installation and Main Connection**					$ 213,700
3	**Private Side Connection**					$ 69,000
4	**North Creek Pump Station Improvements**					$ 117,585
Markups	Subtotals					$ 1,198,000
	Contractor General Conditions @	8.0%				$ 96,000
	Subtotals					$ 1,294,000
	Contractor Overhead and Profit @	12.0%				$ 155,000
	Subtotals					$ 1,449,000
	Sales Tax @	9.5%				$ 138,000
	Subtotals					$ 1,587,000
	Contingency @	35.0%				$ 555,000
	Engineer's Estimate of Probable Bid Price [1]					**$ 2,142,000**
	Engineering, Legal and Administrative Costs @	30.0%				$ 642,600
	TOTAL PROJECT COST					**$ 2,780,000**

NOTES:
(1) The accuracy of these estimates should be considered to be within -30% to +50% of the cost shown, consistent with An AACE Class 5 Order of Magnitude estimate.

ENGINEER'S ESTIMATE OF PROBABLE COST | **KENNEDY/JENKS CONSULTANTS**

Project: City of Bothell - Reclaimed Water Feasibility Study
Alternative C, Area 1, Seattle Times,and Area 2

Prepared By: JEC
Date Prepared: Apr-12
K/J Proj. No.: 1197004
Current at ENR 9044.65

BID ITEM NO.	DISTRIBUTION AREA					TOTAL
1	**Backbone distribution system**					$ 1,087,815
2	**Meter Installation and Main Connection**					$ 229,600
3	**Private Side Connection**					$ 89,000
4	**North Creek Pump Station Improvements**					$ 117,585
Markups	Subtotals					$ 1,524,000
	Contractor General Conditions @	8.0%				$ 122,000
	Subtotals					$ 1,646,000
	Contractor Overhead and Profit @	12.0%				$ 198,000
	Subtotals					$ 1,844,000
	Sales Tax @	9.5%				$ 175,000
	Subtotals					$ 2,019,000
	Contingency @	35.0%				$ 707,000
	Engineer's Estimate of Probable Bid Price [1]					**$ 2,726,000**
	Engineering, Legal and Administrative Costs @	30.0%				$ 817,800
	TOTAL PROJECT COST					**$ 3,540,000**

NOTES:
(1) The accuracy of these estimates should be considered to be within -30% to +50% of the cost shown, consistent with An AACE Class 5 Order of Magnitude estimate.

ENGINEER'S ESTIMATE OF PROBABLE COST | **KENNEDY/JENKS CONSULTANTS**

Project: City of Bothell - Reclaimed Water Feasibility Study
Alternative D, Area 1, Seattle Times,and Area 3

Prepared By: JEC
Date Prepared: Apr-12
K/J Proj. No.: 1197004
Current at ENR 9044.65

BID ITEM NO.	DISTRIBUTION AREA					TOTAL
1	**Backbone distribution system**					$ 1,694,215
2	**Meter Installation and Main Connection**					$ 338,300
3	**Private Side Connection**					$ 124,000
4	**North Creek Pump Station Improvements**					$ 117,585
Markups	Subtotals					$ 2,274,100
	Contractor General Conditions @	8.0%				$ 182,000
	Subtotals					$ 2,456,000
	Contractor Overhead and Profit @	12.0%				$ 295,000
	Subtotals					$ 2,751,000
	Sales Tax @	9.5%				$ 261,000
	Subtotals					$ 3,012,000
	Contingency @	35.0%				$ 1,054,000
	Engineer's Estimate of Probable Bid Price [1]					**$ 4,066,000**
	Engineering, Legal and Administrative Costs @	30.0%				$ 1,219,800
	TOTAL PROJECT COST					**$ 5,290,000**

NOTES:
(1) The accuracy of these estimates should be considered to be within -30% to +50% of the cost shown, consistent with An AACE Class 5 Order of Magnitude estimate.

ENGINEER'S ESTIMATE OF PROBABLE COST **KENNEDY/JENKS CONSULTANTS**

Project: City of Bothell - Reclaimed Water Feasibility Study
Alternative E, Downtown only (North Creek Pump Station to Area 3)

Prepared By: JEC
Date Prepared: Apr-12
K/J Proj. No.: 1197004
Current at ENR 9044.65

BID ITEM NO.	DISTRIBUTION AREA					TOTAL
1	**Backbone distribution system**					$ 1,061,815
2	**Meter Installation and Main Connection**					$ 124,600
3	**Private Side Connection**					$ 55,000
4	**North Creek Pump Station Improvements**					$ 117,585
Markups	Subtotals					$ 1,359,000
	Contractor General Conditions @	8.0%				$ 109,000
	Subtotals					$ 1,468,000
	Contractor Overhead and Profit @	12.0%				$ 176,000
	Subtotals					$ 1,644,000
	Sales Tax @	9.5%				$ 156,000
	Subtotals					$ 1,800,000
	Contingency @	35.0%				$ 630,000
	Engineer's Estimate of Probable Bid Price [1]					**$ 2,430,000**
	Engineering, Legal and Administrative Costs @	30.0%				$ 729,000
	TOTAL PROJECT COST					**$ 3,160,000**

NOTES:
(1) The accuracy of these estimates should be considered to be within -30% to +50% of the cost shown, consistent with An AACE Class 5 Order of Magnitude estimate.

ENGINEER'S ESTIMATE OF PROBABLE COST | **KENNEDY/JENKS CONSULTANTS**

Project: City of Bothell - Reclaimed Water Feasibility Study
Alternative F, All Customers (Area 1, Area2 and Area 3)

Prepared By: JEC
Date Prepared: Apr-12
K/J Proj. No.: 1197004
Current at ENR 9044.65

BID ITEM NO.	DISTRIBUTION AREA					TOTAL
1	**Backbone distribution system**					$ 1,694,215
2	**Meter Installation and Main Connection**					$ 354,200
3	**Private Side Connection**					$ 144,000
4	**North Creek Pump Station Improvements**					$ 117,585
Markups	Subtotals					$ 2,310,000
	Contractor General Conditions @	8.0%				$ 185,000
	Subtotals					$ 2,495,000
	Contractor Overhead and Profit @	12.0%				$ 299,000
	Subtotals					$ 2,794,000
	Sales Tax @	9.5%				$ 265,000
	Subtotals					$ 3,059,000
	Contingency @	35.0%				$ 1,071,000
	Engineer's Estimate of Probable Bid Price [1]					**$ 4,130,000**
	Engineering, Legal and Administrative Costs @	30.0%				$ 1,239,000
	TOTAL PROJECT COST					**$ 5,370,000**

NOTES:
(1) The accuracy of these estimates should be considered to be within -30% to +50% of the cost shown, consistent with An AACE Class 5 Order of Magnitude estimate.

ENGINEER'S ESTIMATE OF PROBABLE COST **KENNEDY/JENKS CONSULTANTS**

Project: City of Bothell - Reclaimed Water Feasibility Study

Prepared By: JEC
Date Prepared: Jan-12
K/J Proj. No. 1197004

Building, Area: Distribution System - AREA 1A - North Creek Pump Station Connection to Bothell Business Park Loop and Seattle Times

Current at ENR 9044.65
Escalated to ENR

Estimate Type: **Conceptual** **Construction**
Preliminary (w/o plans)
Design Development @ **% Complete**

Spec. Section	Item No.	Description	Qty	Units	Materials $/Unit	Materials Total	Installation $/Unit	Installation Total	Sub-contractor $/Unit	Sub-contractor Total	Total
DIVISION 2 - SITE WORK											
		Pavement Cutting, 4" Thick	16,180	In Ft	-	-	0.38	6,148			6,148
		Remove AC Pavement	3,267	SY	-	-	13.00	42,472			42,472
		Haul AC Pavement to Landfill, 10 MI/EW	40	CY	-	-	7.82	315			315
		Dispose AC (Tipping Fee)	40	CY	-	-	5.51	222			222
		Traffic Plates, 1", 12 uses	613	SF	1.42	870	1.51	925			1,795
		4" AC Paving on 8" ABC	3,267	SY	25.00	81,678	13.00	42,472			124,150
		Off Hauling of spoils	145	Truckloads	-	-	140.00	20,329			20,329
		Tipping Fee	145	Truckloads	90.00	13,068	-	-			13,068
		Traffic Control Crew A-5	37	Days	-	-	800.00	29,404			29,404
		Private Connection to Main (paving removal, pipe to meter)	4	EA	-	-	12,000.00	48,000			48,000
DIVISION 11 - EQUIPMENT											
		Package Booster Pump Station and meter	1	LS		80,000		20,000			100,000
DIVISION 15 - MECHANICAL											
		30" Butterfly Valve	1	EA	9,000.00	9,000	3,000.00	3,000			12,000
		30" x 12" reducer	1	EA	-	-	3,000.00	3,000			3,000
		12" x 8" reducer	1	EA	-	-	1,650.00	1,650			1,650
		8" coupling	1	EA	-	-	935.00	935			935
		Fittings Allowance 15% of pipe cost	1	LS	-	-	12,706.00	12,706			12,706
		6" C900 Purple, Common Earth Excavation, 4 ft deep	4,900	LF	14.00	68,600	11.09	54,341			122,941
		8" C900 Purple, Common Earth Excavation, 4 ft deep	2,451	LF	18.74	45,932	12.39	30,368			76,300
		Dewatering	1	LS	20,000.00	20,000	-	-			20,000
		6" Blowoff Assembly	2	EA	2,000.00	4,000	500.00	1,000			5,000
		8" Blowoff Assembly	2	EA	2,000.00	4,000	500.00	1,000			5,000
		2" ARV	2	EA	500.00	1,000	250.00	500			1,500
		BP-4-Bothell BP- 2-inch meter	1	LS	10,200.00	10,200	-	-			10,200
		BP-5- Bothell Playfields- 1.5-inch meter	1	LS	3,900.00	3,900	-	-			3,900
		BP-6 - Seattle Times - 2 -inch meter	1	LS	10,200.00	10,200	-	-			10,200
		FS- Fill Station	1	LS	97,000.00	97,000	-	-			97,000
		Industrial/Commercial Private Connections	1	EA	-	-	20,000.00	20,000			20,000
		Irrigation Connections	2	EA	-	-	3,000.00	6,000			6,000
SUBTOTAL, ALL DIVISIONS						**449,448**		**318,789**			**794,000**

ENGINEER'S ESTIMATE OF PROBABLE COST **KENNEDY/JENKS CONSULTANTS**

Project: City of Bothell - Reclaimed Water Feasibility Study

Building, Area: Distribution System - AREA 1 - North Creek Pump Station Connection to Bothell Business Park Loop, Schnitzer Loop, and Seattle Times

Prepared By: JEC
Date Prepared: Jan-12
K/J Proj. No. 1197004

Current at ENR 9044.65
Escalated to ENR

Estimate Type: **Conceptual** **Construction**
Preliminary (w/o plans)
Design Development @ **% Complete**

Spec. Section	Item No.	Description	Qty	Units	Materials $/Unit	Materials Total	Installation $/Unit	Installation Total	Sub-contractor $/Unit	Sub-contractor Total	Total
DIVISION 2 - SITE WORK											
		Pavement Cutting, 4" Thick	27,136	In Ft	-	-	0.38	10,312			10,312
		Remove AC Pavement	5,480	SY	-	-	13.00	71,246			71,246
		Haul AC Pavement to Landfill, 10 MI/EW	68	CY	-	-	7.82	529			529
		Dispose AC (Tipping Fee)	68	CY	-	-	5.51	373			373
		Traffic Plates, 1", 12 uses	1,028	SF	1.42	1,459	1.51	1,552			3,011
		4" AC Paving on 8" ABC	5,480	SY	25.00	137,011	13.00	71,246			208,257
		Traffic Control Crew A-5	62	Days	-	-	800.00	49,324			49,324
		Off Hauling of spoils	244	Truckloads	-	-	140.00	34,101			34,101
		Tipping Fee	244	Truckloads	90.00	21,922	-	-			21,922
		Private Connection to Main (paving removal, pipe to meter)	6	EA	-	-	12,000.00	72,000			72,000
		Horizontal Boring under 2 Creek Crossings	66	LF	146.00	9,636	189.50	12,507			22,143
DIVISION 11 - EQUIPMENT											
		Package Booster Pump Station and meter	1	LS		80,000		20,000			100,000
DIVISION 15 - MECHANICAL											
		30" Butterfly Valve	1	EA	9,000.00	9,000	3,000.00	3,000			12,000
		30" x 12" reducer	1	EA	-	-	3,000.00	3,000			3,000
		12" x 8" reducer	1	EA	-	-	1,650.00	1,650			1,650
		8" coupling	1	EA	-	-	935.00	935			935
		Fittings Allowance 15% of pipe cost	1	LS	-	-	20,991.00	20,991			20,991
		6" C900 Purple, Common Earth Excavation, 4 ft deep	9,880	LF	14.00	138,320	11.09	109,569			247,889
		8" C900 Purple, Common Earth Excavation, 4 ft deep	2,451	LF	18.74	45,932	12.39	30,368			76,300
		Dewatering	1	LS	20,000.00	20,000	-	-			20,000
		6" Blowoff Assembly	2	EA	2,000.00	4,000	500.00	1,000			5,000
		8" Blowoff Assembly	2	EA	2,000.00	4,000	500.00	1,000			5,000
		2" ARV	2	EA	500.00	1,000	250.00	500			1,500
		BP-1 - ATT - 2-inch meter	1	LS	10,200.00	10,200	-	-			10,200
		BP-3-Schnitzer BP - 2-inch meter	1	LS	10,200.00	10,200	-	-			10,200
		BP-4-Bothell BP- 2-inch meter	1	LS	10,200.00	10,200	-	-			10,200
		BP-5- Bothell Playfields- 1.5" meter	1	LS	3,900.00	3,900	-	-			3,900
		BP-6 - Seattle Times - 2 -inch meter	1	LS	10,200.00	10,200	-	-			10,200
		FS- Fill Station	1	LS	97,000.00	97,000	-	-			97,000
		Industrial/Commercial Private Connections	3	EA	-	-	20,000.00	60,000			60,000
		Irrigation Connections	3	EA	-	-	3,000.00	9,000			9,000
SUBTOTAL, ALL DIVISIONS						**613,980**		**515,201**			**1,198,000**

ENGINEER'S ESTIMATE OF PROBABLE COST **KENNEDY/JENKS CONSULTANTS**

Project: City of Bothell - Reclaimed Water Feasibility Study

Prepared By: JEC
Date Prepared: Jan-12
K/J Proj. No. 1197004

Building, Area: Distribution System - Connect Node 10 to UW

Current at ENR 9044.65
Escalated to ENR

Estimate Type: **Conceptual** **Construction**
Preliminary (w/o plans)
Design Development @ **% Complete**

Spec. Section	Item No.	Description	Qty	Units	Materials $/Unit	Materials Total	Installation $/Unit	Installation Total	Sub-contractor $/Unit	Sub-contractor Total	Total
DIVISION 2 - SITE WORK											
		Pavement Cutting, 4" Thick	5,948	In Ft	-	-	0.38	2,260			2,260
		Remove AC Pavement	1,200	SY	-	-	13.00	15,600			15,600
		Haul AC Pavement to Landfill, 10 MI/EW	15	CY	-	-	7.82	116			116
		Dispose AC (Tipping Fee)	15	CY	-	-	5.51	82			82
		Traffic Plates, 1", 12 uses	225	SF	1.42	320	1.51	340			659
		I-405/Beardsely Bridge Crossing	1	LS	-	-	-	-	-	60,000	60,000
		Horizontal Boring under 1 Creek Crossings	33	LF	146.00	4,818	189.50	6,254			11,072
		Traffic Control Crew A-5	14	Days	-	-	800.00	10,800			10,800
		Bridge Piping Connection	2	EA	-	-	25,000.00	50,000			50,000
		Off Hauling of spoils	53	Truckloads	-	-	140.00	7,467			7,467
		Tipping Fee	53	Truckloads	90.00	4,800	-	-			4,800
		Private Connection to Main (paving removal, pipe to meter)	1	EA	-	-	12,000.00	12,000			12,000
		4" AC Paving on 8" ABC	1,200	SY	25.00	30,000	13.00	15,600			45,600
DIVISION 15 - MECHANICAL											
		Fittings Allowance 15% of pipe cost	1	LS	-	-	4,491.00	4,491			4,491
		6" C900 Purple, Common Earth Excavation, 4 ft deep	2,700	LF	14.00	37,800	11.09	29,943			67,743
		Dewatering	1	LS	3,000.00	3,000	-	-			3,000
		6" Blowoff Assembly	2	EA	2,000.00	4,000	500.00	1,000			5,000
		2" ARV	2	EA	500.00	1,000	250.00	500			1,500
		Industrial/Commercial Private Connections	1	EA	-	-	20,000.00	20,000			20,000
		UWB/CCC - 1.5-inch meter	1	LS	3,900.00	3,900	-	-			3,900
SUBTOTAL, ALL DIVISIONS						**89,638**		**176,452**		**60,000**	**326,000**

ENGINEER'S ESTIMATE OF PROBABLE COST **KENNEDY/JENKS CONSULTANTS**

Project: City of Bothell - Reclaimed Water Feasibility Study

Prepared By: JEC
Date Prepared: Jan-12
K/J Proj. No. 1197004

Building, Area: Distribution System - Connect UW to Downtown

Current at ENR 9044.65
Escalated to ENR

Estimate Type: **Conceptual** **Construction**
Preliminary (w/o plans)
Design Development @ **% Complete**

Spec. Section	Item No.	Description	Qty	Units	Materials $/Unit	Materials Total	Installation $/Unit	Installation Total	Sub-contractor $/Unit	Sub-contractor Total	Total
DIVISION 2 - SITE WORK											
		Pavement Cutting, 4" Thick	22,778	In Ft	-	-	0.38	8,656			8,656
		Remove AC Pavement	4,600	SY	-	-	13.00	59,800			59,800
		Haul AC Pavement to Landfill, 10 MI/EW	57	CY	-	-	7.82	444			444
		Dispose AC (Tipping Fee)	57	CY	-	-	5.51	313			313
		Traffic Plates, 1", 12 uses	863	SF	1.42	1,225	1.51	1,302			2,527
		Traffic Control Crew A-5	52	Days	-	-	800.00	41,400			41,400
		Private Connection to Main (paving removal, pipe to meter)	8	EA	-	-	12,000.00	96,000			96,000
		Off Hauling of spoils	204	Truckloads	-	-	140.00	28,622			28,622
		Tipping Fee	204	Truckloads	90.00	18,400	-	-			18,400
		4" AC Paving on 8" ABC	4,600	SY	25.00	115,000	13.00	59,800			174,800
DIVISION 15 - MECHANICAL											
		Fittings Allowance 15% of pipe cost	1	LS	-	-	16,340.00	16,340			16,340
		6" C900 Purple, Common Earth Excavation, 4 ft deep	4,500	LF	14.00	63,000	11.09	49,905			112,905
		4" C900 Purple, Common Earth Excavation, 4 ft deep	5,850	LF	9.61	56,219	10.09	59,027			115,245
		Dewatering	1	LS	15,000.00	15,000	-	-			15,000
		6" Blowoff Assembly	2	EA	2,000.00	4,000	500.00	1,000			5,000
		8" Blowoff Assembly	2	EA	2,000.00	4,000	500.00	1,000			5,000
		2" ARV	2	EA	500.00	1,000	250.00	500			1,500
		DT-1 - City Hall - 0.5-inch meter	1	LS	3,000.00	3,000	-	-			3,000
		DT-2- River Front - 1.5-inch meter	1	LS	3,900.00	3,900	-	-			3,900
		DT-3-Senior Housing - 1.5-inch meter	1	LS	3,900.00	3,900	-	-			3,900
		DT-4-Weidner Apts- 1.5-inch meter	1	LS	3,900.00	3,900	-	-			3,900
		DT-5- McMenamins- 1.5-inch meter	1	LS	3,900.00	3,900	-	-			3,900
		DT-6 - Camwest Lot O- 1.5 -inch meter	1	LS	3,900.00	3,900	-	-			3,900
		DT - 7- Camwest Lot K -1-inch meter	1	LS	3,100.00	3,100	-	-			3,100
		DT - 8 - CUD - 0.5-inch meter	1	LS	3,000.00	3,000	-	-			3,000
		Residential Connections	3	EA	-	-	2,000.00	6,000			6,000
		Irrigation Connections	3	EA	-	-	3,000.00	9,000			9,000
		Industrial/Commercial Connections	2	EA	-	-	20,000.00	40,000			40,000
SUBTOTAL, ALL DIVISIONS						**306,443**		**479,108**			**786,000**

ENGINEER'S ESTIMATE OF PROBABLE COST **KENNEDY/JENKS CONSULTANTS**

Project: City of Bothell - Reclaimed Water Feasibility Study

Prepared By: JEC
Date Prepared: Jan-12
K/J Proj. No. 1197004

Building, Area: Distribution System - Connect Northcreek to UWBCCC Node

Current at ENR 9044.65
Escalated to ENR

Estimate Type: **Conceptual** **Construction**
Preliminary (w/o plans)
Design Development @ **% Complete**

Spec. Section	Item No.	Description	Qty	Units	Materials $/Unit	Materials Total	Installation $/Unit	Installation Total	Sub-contractor $/Unit	Sub-contractor Total	Total
DIVISION 2 - SITE WORK											
		Pavement Cutting, 4" Thick	11,340	In Ft	-	-	0.38	4,309			4,309
		Remove AC Pavement	2,289	SY	-	-	13.00	29,761			29,761
		Haul AC Pavement to Landfill, 10 MI/EW	28	CY	-	-	7.82	221			221
		Dispose AC (Tipping Fee)	28	CY	-	-	5.51	156			156
		I-405/Beardsely Bridge Crossing	1	LS	-	-	-	-	-	60,000	60,000
		Traffic Plates, 1", 12 uses	429	SF	1.42	610	1.51	648			1,258
		Horizontal Boring under 1 Creek Crossings	33	LF	146.00	4,818	189.50	6,254			11,072
		Traffic Control Crew A-5	26	Days	-	-	800.00	20,604			20,604
		Bridge Piping Connection	2	EA	-	-	25,000.00	50,000			50,000
		Off Hauling of spoils	102	Truckloads	-	-	140.00	14,245			14,245
		Tipping Fee	102	Truckloads	90.00	9,157	-	-			9,157
		4" AC Paving on 8" ABC	2,289	SY	25.00	57,233	13.00	29,761			86,995
DIVISION 11 - EQUIPMENT											
		Package Booster Pump Station and meter	1	LS		80,000		20,000			100,000
DIVISION 15 - MECHANICAL											
		Fittings Allowance 15% of pipe cost	1	LS	-	-	9,046.63	9,047			9,047
		6" C900 Purple, Common Earth Excavation, 4 ft deep	2,700	LF	14.00	37,800	11.09	29,943			67,743
		8" C900 Purple, Common Earth Excavation, 4 ft deep	2,451	LF	18.74	45,932	12.39	30,368			76,300
		Dewatering	1	LS	3,000.00	3,000	-	-			3,000
		6" Blowoff Assembly	2	EA	2,000.00	4,000	500.00	1,000			5,000
		30" Butterfly Valve	1	EA	9,000.00	9,000	3,000.00	3,000			12,000
		30" x 12" reducer	1	EA	-	-	3,000.00	3,000			3,000
		12" x 8" reducer	1	EA	-	-	1,650.00	1,650			1,650
		8" coupling	1	EA	-	-	935.00	935			935
		8" Blowoff Assembly	2	EA	2,000.00	4,000	500.00	1,000			5,000
		2" ARV	2	EA	500.00	1,000	250.00	500			1,500
SUBTOTAL, ALL DIVISIONS						**256,550**		**256,402**		**60,000**	**573,000**

Attachment 2

Booster Pump Station Cut Sheets

QUOTATION
TP12-JM032312A

TRIANGLE PUMP AND EQUIPMENT, INC.

From: Triangle Pump & Equipment, Inc.
Attn: Jennifer Coker – Kennedy/Jenks Consultants
503-295-4911

Date: 03/23/12
Bid Date: N/A

QUOTATION/ SCOPE	Owner: City of Portland Project: Booster Pump Station Location: Portland OR	Consulting Firm: Kennedy/Jenks

Upon the terms and conditions on both sides of this form and accompanying materials, **Triangle Pump and Equipment, Inc.**, is pleased to offer the following equipment quotation for your review.

SCHEDULE

Submittals: 3-4 weeks after acknowledgement of order. Include this proposal as part of the purchase order for this system.

Shipment: 12-16 weeks after receipt of approved submittals and release to production. Delivery date may change at release, depending on product availability from key vendors.

SCOPE OF EQUIPMENT

Factory built pumping system. Principal components are as listed below. Station shall be UL Listed as a complete unit under UL and ETL categories. Control panel shall be UL 508 listed.

System is quoted per RFQ dated **3/22/12**.
SyncroFlo is **ISO 9001:2008** certified, certificate number FM 555054.

SYSTEM PARTICULARS

- System Model Number: SFIMC3-3P420-CCES35
- System Design Flow Rate (GPM): 420
- System Rated Suction Pressure (PSI): 65
- System Rated Discharge Pressure (PSI): 100
- Power to Be Provided (Voltage/Phase/Hertz): 460/3/60
- System Approximate Dry Weight (lbs.): 4,700
- System Approximate Footprint: 8’W x 12’L

MECHANICAL

- Qty (3) Peerless C615A close coupled end suction pumps with mechanical seals, each rated at 210 GPM @ 95’ TDH including station losses.
- Qty (3) 7.5-HP 3600 RPM TEFC premium efficient motors, conforming to MG-1 Part 31 for use on inverter.
- Qty (3) thermal purge valves, mechanically operated.
- Qty (3) 3" pump suction 150 PSI AWWA butterfly valves, and flex connectors.
- Qty (3) 3" pump discharge flex connectors, check valves and 150 PSI AWWA butterfly valves.
- Qty (1) 8” system inlet connection flange.
- Qty (1) 8” steel suction manifold, lined with fusion bonded epoxy.
- Qty (1) set of steel branch piping, lined with fusion bonded epoxy.
- Qty (1) 8” steel discharge manifold, lined with fusion bonded epoxy.
- Qty (1) 3” pressure relief valve with 150 PSI AWWA butterfly valves at its inlet & outlet, discharging to suction.
- Qty (1) 4" Krohne electromagnetic flow meter.
- Qty (1) 3/4” hose bib with vacuum breaker.
- Qty (2) 1/2” manual air release valves.
- Qty (1) 8” system outlet connection flange.
- Qty (1) set of copper tubing for instrumentation connection.
- Qty (2) 4.5" glycerin filled pressure gauges with isolation valves, pipe mounted.
- Qty (6) Skid anchor clips and stainless steel anchor bolts.
- Station skid, suitable for grouting on site.
- System to be primed with epoxy primer.
- System to be painted with Low VOC polyurethane enamel.

Controls:

- Qty (1) UL listed NEMA 12 rated force ventilated control panel to house all logic and motor control for the pump system.
- Qty (1) Secondary surge & lightning arrestor.
- Qty (1) Main disconnect circuit breaker, 25kAIC rated, with through door operator.
- Qty (1) Phase monitor.
- Qty (3) Motor disconnect circuit breakers, 25kAIC rated.
- Qty (Q) Dedicated VFDs, as manufactured by Mitsubishi, D740 series, with 5% line reactor.
- Qty (1) 110 volt control transformer.
- Qty (1) Set of 22 mm operator controls including:
  - Pump H-O-A switches
  - Alarm reset push button
  - Pump run lights - Green
  - Alarm light - Red
  - Control power light - White
- Qty (3) run time meters for pumps.

- Qty (2) Pressure transmitters, one on suction header and one on discharge header.
- Qty (1) Allen Bradley MicroLogix 1400 programmable controller with successive and 24 hour pump alternation, sequence shifting, power failure restart sequence, pressure sequencing with staging delay, alarm systems, etc.
- Qty (1) Maple HMI5070NH color touch screen OIT. System can be used to access registers within the Microprocessor from the front of the control panel.
- Qty (1) Set of station OIT displayed items:
  - Selection of lead pump or selection of automatic alternation
  - Current suction pressure
  - Current discharge pressure
  - Current flow rate
  - Total accumulated flow
  - Pump run times
  - Pumping system diagnostics
  - Low inlet pressure alarm display
  - Low discharge pressure alarm display
  - High discharge pressure alarm display
  - Phase failure alarm display
  - Pump and/or VFD failure alarm display

Spare Parts:

- Qty (1) Set of mechanical seal and pump gaskets
- Qty (1) Set of replacement fuses
- Qty (1) Set of replacement pilot light lamps

SCADA Interface:

- Qty (3) auxiliary analog signals including:
  - Suction Pressure (AO)
  - Discharge Pressure (AO)
  - Flow Rate (AO)
- Qty (Q) auxiliary contacts including:
  - Each Pump Call (DI x 3)
  - Each Pump Running (DO x 3)
  - Each Pump Fault (DO x 3)
  - Each System Alarm (DO x 4)

Post Production:

- Hydrostatic test at 150 PSI for 20 minutes, with report.
- Full factory functional and performance testing with X-Y plot.
  - Test rig is NIST traceable.
  - System test at 5 points from 0 to 125% of rated flow.
  - Flow rate at each point.
  - Suction pressure at each point.
  - Discharge pressure at each point.
- Freight to site is included.

- Installation is not included.
- Start-up, station calibration & operator training is included, 1 day allotted.
- Warranty is 1 Year from startup or 18 months from the date of shipment.

Budget Price: $73,339.00

Triangle Pump & Equipment, Inc. special terms and conditions apply:

Progress payment schedule – 30% due upon receipt of approved submittals and release to production, 30% due at time of shipment, 40% net 30 days

Price is valid for 30 days from the above date and may be subject to change after that time. Tax is not included.

Price does not include taxes, installation or crane.

TERMS AND CONDITIONS OF SALE

1. Agreement, Integration and Conflict of Terms.
These terms and conditions, together with any special conditions expressly incorporated thereto in the quotation or sales form, are to govern any sale by SyncroFlo, Inc. ("Seller"). This writing is an offer or counteroffer by Seller to sell the goods and/or services set forth on the quotation or sales form subject to these terms and conditions and is expressly made conditional on Buyer's assent to these terms and conditions. Acceptance by Buyer is expressly limited to these terms and conditions. Any additional or different terms and conditions contained in Buyer's purchase order or other communication shall not be effective or binding upon Seller unless specifically agreed to in writing by Seller; Seller hereby objects to any such conditions, and the failure of Seller to object to specific provisions contained in any purchase order or other communication from Buyer shall not be construed as neither a waiver of these terms and conditions nor an acceptance of any such provisions. Neither Seller's commencement of performance nor delivery shall be deemed or construed as acceptance of Buyer's additional or different terms and conditions. Buyer agrees that these terms and conditions, together with any accompanying quotation and any special conditions or limited process guarantees or documents referred to or included within the quotation and expressly made a part of this agreement, (e.g., drawings, illustrations, specifications, or diagrams), is the complete and final agreement between the parties ("Agreement"). This Agreement supersedes all prior negotiations, representations, or agreements, either written or oral, between the parties and, further, can only be altered, modified or amended with the express written consent of Seller.
2. Quotation, Withdrawal, Expiration.
Quotes are valid for thirty (30) calendar days from the date of issuance. Seller reserves the right to cancel or withdraw the quotation at any time with or without notice or cause prior to acceptance by Buyer. There is no Agreement if any conditions specified within the quotation or sales form are not completed by Buyer to Seller's satisfaction within thirty (30) calendar days of Seller's acknowledgement in writing of an order. Seller nevertheless reserves its right to accept any contractual documents received from Buyer after this 30-day period.
3. Prices.
Prices apply to the specific quantities stated on the quotation or sales form. Unless otherwise agreed to in writing by Seller, all prices are F.O.B. Seller's plant, and do not include transportation costs or charges relating to transportation, which costs and charges shall be solely the responsibility of Buyer. Prices include standard packing according to Seller's specifications. All costs and taxes for special packing requested by Buyer, including packing for exports, shall be paid by Buyer as an additional charge. Prices are subject to change without notice.
4. Taxes.
The price for the goods does not include any applicable sales, use, excise, GST, VAT, or similar tax. Buyer shall have the responsibility for the payment of such taxes if applicable.
5. Payment Terms.
Seller reserves the right to require payment in advance or C.O.D. and otherwise modify credit terms should Buyer's credit standing not meet Seller's acceptance. Unless different payment terms are expressly set forth in the quotation or sales form or order acknowledgment or Sales Policy Manual, goods will be invoiced upon shipment. Payment in full is due within thirty (30) days from the invoice date. In the event payment is not made when due, Buyer agrees to pay Seller a service or finance charge of the lesser of (i) one and one-half percent (1.5%) per month (18% per annum), or (ii) the highest rate permitted by applicable law, on the unpaid balance of the invoice from and after the invoice due date. Buyer is responsible for all costs and expenses associated with any checks returned due to insufficient funds. All credit sales are subject to prior approval of Seller's credit department. Export shipments will require payment prior to shipment or an appropriate Letter of Credit. If, during the performance of the contract with Buyer, the financial responsibility or condition of Buyer is such that Seller in good faith deems itself insecure, or if Buyer becomes insolvent, or if a material change in the ownership of Buyer occurs, or if Buyer fails to make any payments in accordance with the terms of its contract with Seller, then, in any such event, Seller is not obligated to continue performance under the contract and may stop goods in transit and defer or decline to make delivery of goods,

except upon receipt of satisfactory security or cash payments in advance, or Seller may terminate the order upon written notice to Buyer without further obligation to Buyer whatsoever. If Buyer fails to make payments or fails to furnish security satisfactory to Seller, then Seller shall also have the right to enforce payment to the full contract price of the work completed and in process. Upon default by Buyer in payment when due, Buyer shall immediately pay to Seller the entire unpaid amounts for any and all shipments made to Buyer irrespective of the terms of said shipment and whether said shipments are made pursuant to this agreement or any other contract of sale between Seller and Buyer, and Seller may withhold all subsequent shipments until the full amount is settled. Acceptance by Seller of less than full payment shall not be a waiver of any of its rights hereunder. Buyer shall not assign or transfer this Agreement or any interest in it, or monies payable under it, without the written consent of Seller and any assignment made without such consent shall be null and void.

6. Delivery, Risk of Loss.

Delivery dates are estimates, and time is not of the essence. All shipments will be made F.O.B. Seller's plant unless otherwise specified. Seller shall not be responsible to Buyer for any loss, whether direct, indirect, incidental or consequential in nature, including without limitation loss of profits, arising out of or relating to any failure of the goods to be delivered by the specified delivery date. In the absence of specific instructions, Seller will select the carrier. Upon delivery to the common carrier, title and the risk of loss for the material shall pass to Buyer. Buyer shall reimburse Seller for the additional cost of its performance resulting from inaccurate or lack of delivery instructions, or by any act or omission on Buyer's part. Any such additional cost may include, but is not limited to, storage, insurance, protection, reinspection and delivery expenses. Buyer further agrees that any payment due on delivery shall be made on delivery into storage as though goods had been delivered in accordance with the order.

7. Warranty.

Seller warrants that the goods sold to Buyer hereunder (with the exception of membranes, seals, gaskets, elastomer materials, coatings and other "wear parts" or consumables all of which are not warranted except as otherwise provided in the quotation or sales form) will be (i) be built in accordance with the specifications referred to in the quotation or sales form, if such specifications are expressly made a part of this Agreement, and (ii) free from defects in material and workmanship for a period of one (1) year from the date of installation or eighteen (18) months from the date of shipment (which date of shipment shall not be greater than thirty (30) days after receipt of notice that the goods are ready to ship), whichever shall occur first (the "Warranty"). Seller shall, at its option and at no cost to Buyer, either repair or replace any product which fails to conform with the Warranty; provided, however, that under either option, Seller shall not be obligated to remove the defective product or install the replaced or repaired product and Buyer shall be responsible for all other costs, including, but not limited to, service costs, shipping fees and expenses. Seller shall have complete discretion as to the method or means of repair or replacement. Buyer's failure to comply with Seller's repair or replacement directions shall constitute a waiver of its rights and render all warranties void. Any parts repaired or replaced under the Warranty are warranted only for the balance of the warranty period on the parts that were repaired or replaced. The Warranty is conditioned on Buyer giving written notice to Seller of any defects in material or workmanship of warranted goods within ten (10) days of the date when any defects are first manifest. Seller shall have no warranty obligations to Buyer with respect to any product or parts of a product that: (a) have been repaired by third parties other than Seller or without Seller's written approval; (b) have been subject to misuse, misapplication, neglect, alteration, accident, or physical damage; (c) have been used in a manner contrary to Seller's instructions for installation, operation and maintenance; (d) have been damaged from ordinary wear and tear, corrosion, or chemical attack; (e) have been damaged due to abnormal conditions, vibration, failure to properly prime, or operation without flow; (f) have been damaged due to a defective power supply or improper electrical protection; or (g) have been damaged resulting from the use of accessory equipment not sold by Seller or not approved by Seller in connection with products supplied by Seller hereunder. In any case of products not manufactured by Seller, there is no warranty from Seller; however, Seller will extend to Buyer any warranty received from Seller's supplier of such products. THE FOREGOING WARRANTY IS EXCLUSIVE AND IN LIEU OF ANY AND ALL OTHER EXPRESS OR IMPLIED WARRANTIES, GUARANTEES, CONDITIONS OR TERMS OF WHATEVER NATURE RELATING TO THE GOODS PROVIDED HEREUNDER, INCLUDING WITHOUT LIMITATIONA NY IMPLIED WARRANTIES OF MERCHANTABILITY AND FITNESS FOR A PARTICULAR PURPOSE, WHICH ARE HEREBY EXPRESSLY DISCLAIMED AND EXCLUDED. BUYER'S EXCLUSIVE REMEDY AND SELLER'S AGGREGATE LIABILITY FOR BREACH OF ANY OF THE FOREGOING WARRANTIES ARE LIMITED TO REPAIRING OR REPLACING THE PRODUCT AND SHALL IN ALL CASES BE LIMITED TO THE AMOUNT PAID BY THE BUYER HEREUNDER. IN NO EVENT IS SELLER LIABLE FOR ANY OTHER FORM OF DAMAGES, WHETHER DIRECT, INDIRECT, LIQUIDATED, INCIDENTAL, CONSEQUENTIAL, PUNITIVE, EXEMPLARY OR SPECIAL DAMAGES, INCLUDING BUT NOT LIMITED TO LOSS OF PROFIT, LOSS OF ANTICIPATED SAVINGS OR REVENUE, LOSS OF INCOME, LOSS OF BUSINESS, LOSS OF PRODUCTION, LOSS OF OPPORTUNITY OR LOSS OF REPUTATION.

8. Inspection.

Buyer shall have the right to inspect the goods upon their receipt. When delivery is to Buyer's site or to a project site ("Site"); Buyer shall notify Seller in writing of any nonconformity of the goods with this Agreement within three (3) days from receipt by Buyer. For all other deliveries, Buyer shall notify Seller in writing of any nonconformity with this Agreement within fourteen (14) days from receipt by Buyer. Failure to give such applicable notice shall constitute a waiver of Buyer's right to inspect and/or reject the goods for nonconformity and shall be equivalent to an irrevocable acceptance of the goods by Buyer. Claims for loss of or damage to goods in transit must be made to the carrier and not to Seller.

9. Seller's Limitation of Liability.

IN NO EVENT SHALL SELLER'S LIABILITY UNDER THIS AGREEMENT EXCEED THE AMOUNT PAID BY BUYER UNDER THIS AGREEMENT. SELLER SHALL HAVE NO LIABILITY FOR LOSS OF PROFIT, LOSS OF ANTICIPATED SAVINGS OR REVENUE, LOSS OF INCOME, LOSS OF BUSINESS, LOSS OF PRODUCTION, LOSS OF OPPORTUNITY, LOSS OF REPUTATION, INDIRECT, CONSEQUENTIAL, INCIDENTAL, PUNITIVE OR EXEMPLARY DAMAGES.

10. Force Majeure.

Seller may cancel or suspend this Agreement and Seller shall have no liability for any failure to deliver or perform, or for any delay in delivering or performing any obligations, due to acts or omissions of Buyer and/or its contractors, or due to circumstances beyond its reasonable control, including but not limited to acts of God, fire, flood or other natural disasters, war and civil disturbance, riot, acts of governments, terrorism, disease, currency restrictions, labor shortages or disputes,
unavailability of materials, fuel, power, energy or transportation facilities, failures of suppliers or subcontractors to effect deliveries, in which case the time for performance shall be extended in an amount equal to the excused period, provided that Seller shall have, as soon as reasonably practicable after it has actual knowledge of the beginning of any excusable delay, notified Buyer of such delay, of the reason therefore and of the probable duration and consequence thereof. Seller shall use its best efforts to eliminate the cause of the delay, interruption or cessation and to resume performance of its obligations hereunder with the least possible delay.

11. **Cancellation.**

Except as otherwise provided in this Agreement, no order may be cancelled unless requested in writing by either party and accepted in writing by the other. In the event of a cancellation by Buyer, Buyer shall, within thirty (30) days of such cancellation, pay Seller a cancellation fee, which shall include all costs and expenses incurred by Seller prior to the receipt of the request for cancellation including, but not limited to, all commitments to its suppliers, subcontractors and others, all labor and overhead expended by Seller, plus a reasonable charge for profit. Notwithstanding anything to the contrary herein, in the event of the commencement by or against Buyer of any voluntary or involuntary proceedings in bankruptcy or insolvency, or in the event Buyer shall be adjusted bankrupt, make a general assignment for the benefit of its creditors, or if a receiver shall be appointed on account of Buyer's insolvency, or if Buyer fails to make payment when due under this Agreement, or in the event Buyer does not correct or, if immediate correction is not possible, commence and diligently continue action to correct any default of Buyer to comply with any of the provisions or requirements of this Agreement within ten (10) calendar days after being notified in writing of such default by Seller, Seller may, by written notice to Buyer, without prejudice to any other rights or remedies which Seller may have, terminate its further performance of this Agreement. In the event of such termination, Seller shall be entitled to receive payment as if Buyer has cancelled the Agreement as per the preceding paragraph. Seller may nevertheless elect to complete its performance of this Agreement by any means it chooses. Buyer agrees to be responsible for any additional costs incurred by Seller in so doing. Upon termination of this Agreement, the rights, obligations and liabilities of the parties which shall have arisen or been incurred under this Agreement prior to its termination shall survive such termination.

12. Drawings.

All drawings are the property of Seller. Seller does not supply detailed or shop working drawings of the goods; however, Seller will supply necessary installation drawings. The drawings and bulletin illustrations submitted with Seller's quotation show general type, arrangement and approximate dimensions of the goods to be furnished for Buyer's information only and Seller makes no representation or warranty regarding their accuracy. Unless expressly stated to the contrary within the quotation or sales form, all drawings, illustrations, specifications or diagrams form no part of this Agreement. Seller reserves the right to alter such details in design or arrangement of its goods which, in its judgment, constitutes an improvement in construction, application or operation. All engineering information necessary for installation of the goods shall be forwarded by Seller to upon Buyer's acceptance of this Agreement. After Buyer's acceptance of this Agreement, any changes in the type of goods, the arrangement of the goods, or application of the goods requested by Buyer will be made at Buyer's expense. Instructions necessary for installation, operating and maintenance will be supplied when the goods are shipped.

13. Proprietary Information, Injunction.

Seller's designs, illustrations, drawings, specifications, technical data, catalogues, "know-how", economic or other business or manufacturing information (collectively "Proprietary Information") disclosed to Buyer shall be deemed proprietary and confidential to Seller. Buyer agrees not to disclose, use, or reproduce any Proprietary Information without first having obtained Seller's express written consent. Buyer's agreement to refrain from disclosing, using or reproducing Proprietary Information shall survive completion of the work under this Agreement. Buyer acknowledges that its improper disclosure of Proprietary Information to any third party will result in Seller's suffering irreparable harm. Seller may seek injunctive or equitable relief to prevent Buyer's unauthorized disclosure.

14. Installation and Start-up.

Unless otherwise agreed to in writing by Seller, installation shall be the sole responsibility of Buyer. Where start-up service is required with respect to the goods purchased hereunder, it must be performed by Seller's authorized personnel or agents; otherwise, the Warranty is void. In the event Buyer has engaged Seller to provide an engineer for start-up supervision, such engineer will function in a supervisory capacity only and Seller shall have no responsibility for the quality of workmanship of the installation. In any event, Buyer understands and agrees that it shall furnish, at Buyer's expense, all necessary foundations, supplies, labor and facilities that might be required to install and operate the goods.

15. Specifications.

Changes in specifications requested by Buyer are subject to approval in writing by Seller. In the event such changes are approved, the price for the goods and the delivery schedule shall be changed to reflect such changes.

16. Buyer Warranty.

Buyer warrants the accuracy of any and all information relating to the details of its operating conditions, including temperatures, pressures, and where applicable, the nature of all hazardous materials. Seller can justifiably rely upon the accuracy of Buyer's information in its performance. Should Buyer's information prove inaccurate, Buyer agrees to reimburse Seller for any losses, liabilities, damages and expenses that Seller may have incurred as a result of any inaccurate information provided by Buyer to Seller.

17. Minimum Order.

Seller reserves the right to refuse to process any order that does not meet quantity requirements that Seller may establish for any given product or group of products.

18. Quality Levels.

Prices are based on quality levels commensurate with normal processing. If a different quality level is required, Buyer must specify its requirements, as approved in writing by Seller, and pay any additional costs that may be applicable.

19. GOVERNING LAW.
THE TERMS OF THIS AGREEMENT AND ALL RIGHTS AND OBLIGATIONS HEREUNDER SHALL BE GOVERNED BY THE LAWS OF THE STATE OF SELLER'S OFFICE TO WHICH THIS ORDER HAS BEEN SUBMITTED (WITHOUT REFERENCE TO PRINCIPLES OF CONFLICTS OF LAWS). THE RIGHTS AND OBLIGATIONS OF THE PARTIES HEREUNDER SHALL NOT BE GOVERNED BY THE 1980 U.N. CONVENTION ON CONTRACTS FOR THE INTERNATIONAL SALE OF GOODS.
20. Titles.
The section titles are for reference only, and shall not limit or restrict the interpretation or construction of this Agreement.
21. Waiver.
Seller's failure to insist, in any one or more instances, upon Buyer's performance of this Agreement, or to exercise any rights conferred, shall not constitute a waiver or relinquishment of any such right or right to insist upon Buyer's performance in any other regard.
22. Severability.
The partial or complete invalidity of any one or more provisions of this Agreement shall not affect the validity or continuing force and effect of any other provision.

Please Remit Purchase Orders To:
SyncroFlo, Inc.
C/O: Triangle Pump & Equipment, Inc.
P.O. Box 2890
Battle Ground, WA 98604

NOT INCLUDED IN SCOPE OF EQUIPMENT SUPPLY AND SERVICES

Unless specifically mentioned in this proposal for inclusion with proposed equipment, Triangle Pump & Equipment, Inc., and the other Manufacturers directly quoting equipment sections included in this Quotation have not included any other items or services.

Only those items which are specifically itemized in the descriptions above are included. No other materials or services are included whether they appear in the referenced specification section or sections referenced in that section or on the plans.

Triangle pump is pleased to provide this quotation for your evaluation. If you have any questions, please feel free to call.

Sincerely,
Jerry Moon
Ph: 360-887-9530
Cell: 360-607-4322
Fax: 360-887-9540
Email: jerry@trianglepump.com

/jam

Customer :

Contact :

Project :

Phone : **Fax :**

Quote No. : US-5407-4 **Page No :** 2 **Date :** Friday, March 23, 2012

Type:	**C - End Suction Close Coupled General Purpose**	Item :	**1**
Pump Model:	**Peerless - C615A**	Impeller No.:	See Spec
Nom. Speed:	**3552 RPM, 60 Hz Electric**	Fluid:	**Water**
Impeller Dia.:	**5.71** inch	Temperature:	**68** °F
Curve No.:	**3115073**	Viscosity:	**1.007** cSt
Market :	**Water**	Sp. Gravity:	**1.000**
		Your Ref. :	

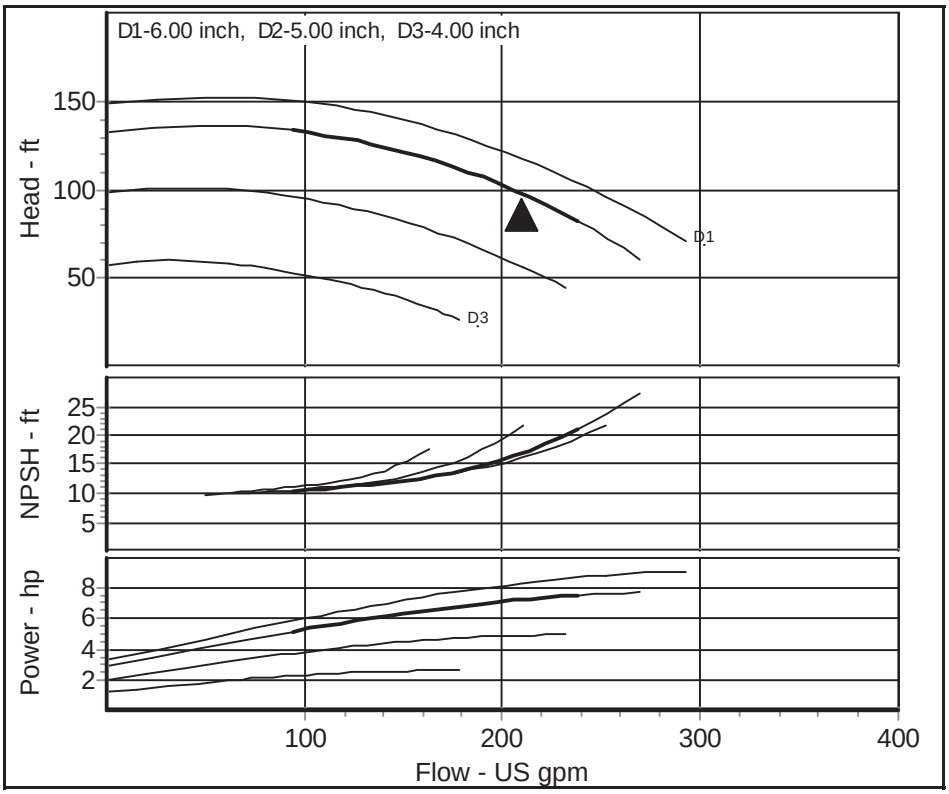

Duty Flow	**210**	US gpm
Duty Head	**95**	ft
Imp. Dia.	**5.71**	inch
Power Required	**7.2**	hp
NPSH Required	**16.9**	ft
Efficiency	**71.7**	%
Peak Power	**7.5**	hp
Closed Valve Head	**132.5**	ft
Tolerance	**Hyd Inst-Peerless Std**	

Comments

Perf. curve represents typical perf, vel. head is incld. Perf. curves tests are performed in accordance with H.I.Stds.

Flow (US gpm)	Head (ft)	Efficiency (%)	Power Required (hp)	NPSH Required (ft)
94.3	133.2	61.5	5.2	10.5
112.2	130.3	66.4	5.6	10.8
130.2	126.5	70.0	5.9	11.3
148.1	121.8	72.4	6.3	12.0
166.1	116.1	73.7	6.6	13.0
184.0	109.4	73.8	6.9	14.3
201.9	101.7	72.7	7.1	16.0
219.9	92.8	70.1	7.3	18.2
237.8	82.6	66.0	7.5	20.9

Appendix F: 2012 City of Bothell Water Rates

ORDINANCE NO. 2079 (2011)

AN ORDINANCE OF THE CITY OF BOTHELL, WASHINGTON, ESTABLISHING NEW USER RATES FOR SINGLE FAMILY RESIDENTIAL, COMMERCIAL BUSINESS AND INDUSTRIAL, MULTIFAMILY RESIDENTIAL, AND IRRIGATION RATE CLASSIFICATIONS FOR WATER SERVICES WITHIN AND OUTSIDE THE CITY LIMITS OF THE CITY OF BOTHELL; AMENDING SECTIONS 18.06.250 OF THE BOTHELL MUNICIPAL CODE; ADDING A NEW SECTION 18.06.530 TO CHAPTER 18.06 BMC, PROVIDING FOR AN EFFECTIVE DATE; AND FOR SUMMARY PUBLICATION

WHEREAS, the City Council deems it necessary to increase the user rates within and without the City limits of the City of Bothell.

NOW, THEREFORE, THE CITY COUNCIL OF THE CITY OF BOTHELL, WASHINGTON, DOES ORDAIN AS FOLLOWS:

Section 1. Section 18.06.250 of the Bothell Municipal Code, is hereby amended to read as follows:

18.06.250 Rates - All users within city limits.

The following charges shall be made by the city for furnishing water service within the city limits:

A. Single-Family Residence Rate Classification.

1. Scope. The single-family residence classification includes all residential structures serviced by a single meter and designed and built for a family unit wherein are carried on the usual functions of living, sleeping and preparation of meals ("household"), and, except as provided for below, the rooms have not been altered to provide for the functions of more than one household and separate households are not maintained. It is the intent of this classification to include:

a. A single-family residence which includes an accessory dwelling unit within the residential structure; and

b. One common wall dwelling unit.

c. Accessory structures with plumbing, common to single-family residential structures, including, but not limited to, garages, greenhouses, cabanas and workshops, shall not cause a change in classification to multifamily or commercial.

2. Low-Income Discount. Qualified low-income elderly customers shall be entitled to a 25 percent discount as set forth in BMC 18.06.255.

3. Base Monthly Meter Charge. The base (minimum) meter charges per month for all single-family residence user classifications within this section are as follows:

Meter Size (inches)	Charge per Month
5/8, 3/4	$10.51
1	$21.73
1-1/2	$39.99
2	$62.19

4. Use Charges. Water usage during the monthly billing period within this section shall be charged as follows:

C.F. in Excess of:	Up to (including):	Charge per 100 C.F.
0	500	~~$2.13~~ $2.07
501	1,000	~~$3.11~~ $3.03
1,001	1,500	~~$4.02~~ $3.91
1,501	2,500	~~$5.12~~ $4.98
2,501		~~$5.84~~ $5.68

B. Commercial, Business and Industrial Rate Classification.

1. Scope. The commercial, business and industrial rate classification covers all commercial, business and industrial water accounts, whether for profit or nonprofit, including convalescent centers and nursing homes.

2. Base Monthly Meter Charge. The base (minimum) meter charges per month for all commercial user classifications within this section are as follows:

Meter Size (inches)	Charge per Month
5/8, 3/4	~~$15.24~~ $13.14
1	~~$37.07~~ $31.97
1-1/2	~~$65.19~~ $56.22
2	~~$102.58~~ $88.46
3	~~$201.72~~ $173.96
4	~~$313.43~~ $270.30
6	~~$623.74~~ $537.91
1-1/2 dedicated fire meter	~~$5.62~~ $11.32
2 dedicated fire meter	~~$8.28~~ $16.67

3. Use Charges. Water usage during the monthly billing period shall be additionally charged as follows:

Winter consumption (November - June)	$2.48 per 100 c.f.
Summer consumption (July - October)	$4.24 per 100 c.f.

C. Water Consumption Through Meters Greater Than Six Inches in Size. Any customer desiring a connection to the city water system through a meter greater than six inches must make an application to the director of public works showing justification for a special rate under this subsection. The city staff must report to the council on any special rate application. A special classification with a different rate must be approved by the city council, and the customer must enter into a written agreement with the city regarding the same.

D. Multifamily Residential Rate Classification.

1. Scope. The multifamily residential rate classification covers all multifamily residential structures and single-meter dwelling unit developments in the city, excepting those developments covered in subsection F of this section, and includes:

a. Any mobile home park, cabin court, trailer court, duplex, triplex, fourplex, multi-unit apartment building or condominium building;

b. Two or more single-family dwellings or a common wall single-family residential structure;

c. Laundry buildings, recreation buildings and other secondary buildings in multifamily residential developments including associated pools and spas; and

d. Boarding homes, group homes and retirement homes, but not including convalescent centers or nursing homes.

2. Low-Income Discount. Qualified low-income elderly customers shall be entitled to a 25 percent discount as set forth in BMC 18.06.255.

3. Base Monthly Meter Charge. The base (minimum) meter charges per month for all multifamily residential user classifications within this section are as follows:

Meter Size (inches)	Charge per Month
5/8, 3/4	~~$16.05~~ $14.15
1	~~$35.45~~ $31.25
1-1/2	~~$67.17~~ $59.23
2	~~$105.00~~ $92.58
3	~~$210.22~~ $185.35

4. Use Charges. Water usage during the monthly billing period shall be additionally charged as follows:

C.F. in Excess of:	Up to (including):	Add'l Charge per 100 C.F.
0	300/unit	$2.18
301	700/unit	$3.18
701	1,000/unit	$4.08
1,001	2,000/unit	$5.21
2,001		$5.91

5. Residential Unit Charge. Each residential unit will be charged ~~$1.92~~ $1.69 per unit per month.

6. Domestic Meters Used for Fire Flow. Multifamily accounts that have fire sprinkler systems approved by the fire marshal that receive the water through the building's domestic meter shall be charged the base monthly meter rate at the rate for the next lower sized meter. A written request must be submitted to the finance department requesting this rate adjustment. (Example: a one-and-one-half-inch meter would be charged the meter rate for a one-inch meter.) Single-family combination domestic/fire meter shall be billed at the three-fourths-inch residential rate.

E. Irrigation Rate Classification.

1. Scope. Irrigation rate classification covers all meters dedicated to irrigation use.

2. Base Monthly Meter Charge. The base (minimum) meter charge per month:

Meter Size (inches)	Charge per Month
5/8, 3/4	~~$9.42~~ $10.51
1	~~$19.10~~ $21.32
1-1/2	~~$34.99~~ $39.05
2	~~$54.09~~ $60.38

3. Use Charges. All consumption will be charged at the rate of ~~$5.71~~ $5.76 per 100 c.f.

F. Regional Facility Charges. In addition to the facilities charges that are currently collected in accordance with a separate resolution of the council, future contracts with water suppliers may require the collection of "regional facilities charges" that compensate investment in the regional water production and delivery system. These fees will be collected with the local facility charges and passed through to the appropriate agency.

Section 2. A new section is added to Chapter 18.06 of the Bothell Municipal Code, to be entitled "Utility tax," to read as follows:

18.06.530 Utility tax.

All charges set forth in BMC 18.06.250 (inside the City limits) shall be subject to the City's utility tax as set forth in BMC 5.08.020, which are not included in charges shown in BMC 18.06.250.

Section 3. Severability. If any section, sub-section, sentence, clause or phrase of this ordinance should be held to be invalid or unconstitutional by a court of competent jurisdiction, such invalidity or unconstitutionality shall not affect the validity of constitutionality of any other section, sub-section, sentence, clause or phrase of this ordinance.

Section 4. Savings. The enactments of this ordinance shall not affect any case, proceeding, appeal or other matter currently pending in any court or in any way modify any right or liability, civil or criminal, which may be in existence on the effective date of this ordinance.

Section 5. Referendum and Effective Date. This ordinance, being an exercise of a power specifically delegated to the City legislative body, is not subject to referendum, and shall take effect January 1, 2012, which is not less than five (5) days after passage and publication of the ordinance or a summary thereof consisting of the title.

Section 6. Corrections. The City Clerk and the codifiers of this ordinance are authorized to make necessary corrections to this ordinance including, but not limited to, the correction of scrivener's/clerical errors, references, ordinance numbering, section/subsection numbers and any references thereto.

APPROVED:

MARK LAMB
MAYOR

ATTEST/AUTHENTICATED:

JOANNE TRUDEL
CITY CLERK

APPROVED AS TO FORM:

JOE BECK
CITY ATTORNEY

FILED WITH THE CITY CLERK: November 8, 2011
PASSED BY THE CITY COUNCIL: November 15, 2011
PUBLISHED: November 21, 2011
EFFECTIVE DATE: January 1, 2012
ORDINANCE NO.: 2079 (2011)

SUMMARY OF ORDINANCE NO. 2079 (2011)

City of Bothell, Washington

On the 15th day of November, 2011, the City Council of the City of Bothell passed Ordinance No. 2079 (2011). A summary of the content of said Ordinance, consisting of the title, is provided as follows:

> AN ORDINANCE OF THE CITY OF BOTHELL, WASHINGTON, ESTABLISHING NEW USER RATES FOR SINGLE FAMILY RESIDENTIAL, COMMERCIAL BUSINESS AND INDUSTRIAL, MULTIFAMILY RESIDENTIAL, AND IRRIGATION RATE CLASSIFICATIONS FOR WATER SERVICES WITHIN AND OUTSIDE THE CITY LIMITS OF THE CITY OF BOTHELL; AMENDING SECTIONS 18.06.250 OF THE BOTHELL MUNICIPAL CODE; ADDING A NEW SECTION 18.06.530 TO CHAPTER 18.06 BMC, PROVIDING FOR AN EFFECTIVE DATE; AND FOR SUMMARY PUBLICATION

The full text of this Ordinance will be mailed upon request.

JOANNE TRUDEL
CITY CLERK

FILED WITH THE CITY CLERK: November 8, 2011
PASSED BY THE CITY COUNCIL: November 15, 2011
PUBLISHED: November 21, 2011
EFFECTIVE DATE: January 1, 2012
ORDINANCE NO.: 2079 (2011)

Appendix G: Alternative Feasibility Analyses

City of Bothell Reclaimed Water Feasibility Study
Net Present Worth Analysis

Year	1	2	3	4	5	6	7	8	9	10	11	12	13	14	15	16	17	18	19	20
Alternative A																				
Capital Costs Sub-Totals																				
Backbone	$1,118,000																			
Meter Installation & Main Connection	$394,000																			
Private Side Connection	$60,000																			
North Creek Pump Station Improvements	$273,000																			
Capital Costs Sub-Totals:	***$1,845,000***																			
Expenses																				
Debt Service (1% Interest) OR	$101,229	$101,229	$101,229	$101,229	$101,229	$101,229	$101,229	$101,229	$101,229	$101,229	$101,229	$101,229	$101,229	$101,229	$101,229	$101,229	$101,229	$101,229	$101,229	$101,229
Debt Service (3.1% Interest) OR	$121,399	$121,399	$121,399	$121,399	$121,399	$121,399	$121,399	$121,399	$121,399	$121,399	$121,399	$121,399	$121,399	$121,399	$121,399	$121,399	$121,399	$121,399	$121,399	$121,399
Debt Service (2% Interest)	$80,764	$80,764	$80,764	$80,764	$80,764	$80,764	$80,764	$80,764	$80,764	$80,764	$80,764	$80,764	$80,764	$80,764	$80,764	$80,764	$80,764	$80,764	$80,764	$80,764
Additional Meters (1 every 5 years)			$25,000					$25,000					$25,000					$25,000		
Gen Op, Admin and Pipe Maint.	$49,900	$51,397	$52,939	$54,527	$56,163	$57,848	$59,583	$61,371	$63,212	$65,108	$67,061	$69,073	$71,145	$73,280	$75,478	$77,743	$80,075	$82,477	$84,951	$87,500
Meter Replacement Sinking Fund	$1,500	$1,500	$1,500	$1,500	$1,500	$1,500	$1,500	$1,500	$1,500	$1,500	$1,500	$1,500	$1,500	$1,500	$1,500	$1,500	$1,500	$1,500	$1,500	$1,500
Additional Meter Replacement Fund			$500	$500	$500	$500	$500	$1,000	$1,000	$1,000	$1,000	$1,000	$1,500	$1,500	$1,500	$1,500	$1,500	$2,000	$2,000	$2,000
Pump Station Maintenance	$5,250	$5,408	$5,570	$5,737	$5,909	$6,086	$6,269	$6,457	$6,651	$6,850	$7,056	$7,267	$7,485	$7,710	$7,941	$8,179	$8,425	$8,677	$8,938	$9,206
Electricity	$4,905	$5,052	$5,203	$5,359	$5,520	$5,686	$5,856	$6,032	$6,213	$6,399	$6,591	$6,789	$6,993	$7,203	$7,419	$7,641	$7,870	$8,107	$8,350	$8,600
Additional Electricity			$260	$268	$276	$284	$293	$603	$621	$640	$659	$679	$1,049	$1,080	$1,113	$1,146	$1,181	$1,621	$1,670	$1,720
Expenses Sub-Totals (1% Interest):	***$162,784***	***$164,585***	***$192,201***	***$169,120***	***$171,097***	***$173,133***	***$175,230***	***$203,192***	***$180,426***	***$182,727***	***$185,096***	***$187,537***	***$215,901***	***$193,502***	***$196,180***	***$198,938***	***$201,780***	***$230,611***	***$208,638***	***$211,755***
Expenses Sub-Totals (3.1% Interest):	***$182,954***	***$184,755***	***$212,371***	***$189,290***	***$191,267***	***$193,303***	***$195,400***	***$223,362***	***$200,596***	***$202,897***	***$205,267***	***$207,708***	***$236,071***	***$213,672***	***$216,350***	***$219,108***	***$221,950***	***$250,781***	***$228,808***	***$231,925***
Expenses Sub-Totals (Grant Funding):	***$61,555***	***$63,356***	***$90,972***	***$67,891***	***$69,868***	***$71,904***	***$74,001***	***$101,963***	***$79,197***	***$81,498***	***$83,867***	***$86,309***	***$114,672***	***$92,273***	***$94,951***	***$97,709***	***$100,551***	***$129,382***	***$107,409***	***$110,526***
Expenses Sub-Totals (50% Grant Funding, 1% Interest):	***$112,169***	***$113,971***	***$141,587***	***$118,506***	***$120,482***	***$122,519***	***$124,616***	***$152,577***	***$129,811***	***$132,112***	***$134,482***	***$136,923***	***$165,287***	***$142,887***	***$145,565***	***$148,324***	***$151,165***	***$179,997***	***$158,023***	***$161,141***
Expenses Sub-Totals (2% Interest):	***$142,318***	***$144,120***	***$171,736***	***$148,655***	***$150,632***	***$152,668***	***$154,765***	***$182,727***	***$159,961***	***$162,261***	***$164,631***	***$167,072***	***$195,436***	***$173,036***	***$175,715***	***$178,473***	***$181,314***	***$210,146***	***$188,173***	***$191,290***
Revenue																				
Initial Revenue	$86,048	$86,048	$86,048	$86,048	$86,048	$86,048	$86,048	$86,048	$86,048	$86,048	$86,048	$86,048	$86,048	$86,048	$86,048	$86,048	$86,048	$86,048	$86,048	$86,048
Additional Revenue			$8,820	$8,820	$8,820	$8,820	$8,820	$13,337	$13,337	$13,337	$13,337	$13,337	$17,855	$17,855	$17,855	$17,855	$17,855	$22,373	$22,373	$22,373
Revenue Sub-Totals:	***$86,048***	***$86,048***	***$94,868***	***$94,868***	***$94,868***	***$94,868***	***$94,868***	***$99,386***	***$99,386***	***$99,386***	***$99,386***	***$99,386***	***$103,903***	***$103,903***	***$103,903***	***$103,903***	***$103,903***	***$108,421***	***$108,421***	***$108,421***
Annual (Revenue - Expenses) (1% Interest):	($76,735)	($78,537)	($97,333)	($74,252)	($76,229)	($78,265)	($80,362)	($103,806)	($81,040)	($83,341)	($85,711)	($88,152)	($111,998)	($89,598)	($92,277)	($95,035)	($97,876)	($122,191)	($100,217)	($103,334)
Net Present Worth (1% Interest):	***($1,329,344)***																			
Annual (Revenue - Expenses) (3.1% Interest):	($96,905)	($98,707)	($117,503)	($94,422)	($96,399)	($98,435)	($100,532)	($123,976)	($101,210)	($103,511)	($105,881)	($108,322)	($132,168)	($109,768)	($112,447)	($115,205)	($118,046)	($142,361)	($120,387)	($123,505)
Net Present Worth (3.1% Interest):	***($1,629,423)***																			
Alternative B																				
Capital Costs Sub-Totals																				
Backbone	$1,854,000																			
Meter Installation & Main Connection	$497,000																			
Private Side Connection	$160,000																			
North Creek Pump Station Improvements	$273,000																			
Capital Costs Sub-Totals:	***$2,784,000***																			
Expenses																				
Debt Service (1% Interest) OR	$152,749	$152,749	$152,749	$152,749	$152,749	$152,749	$152,749	$152,749	$152,749	$152,749	$152,749	$152,749	$152,749	$152,749	$152,749	$152,749	$152,749	$152,749	$152,749	$152,749
Debt Service (3.1% Interest)	$183,184	$183,184	$183,184	$183,184	$183,184	$183,184	$183,184	$183,184	$183,184	$183,184	$183,184	$183,184	$183,184	$183,184	$183,184	$183,184	$183,184	$183,184	$183,184	$183,184
Debt Service (2% Interest)	$121,868	$121,868	$121,868	$121,868	$121,868	$121,868	$121,868	$121,868	$121,868	$121,868	$121,868	$121,868	$121,868	$121,868	$121,868	$121,868	$121,868	$121,868	$121,868	$121,868
Additional Meters (1 every 5 years)			$25,000					$25,000					$25,000					$25,000		
Gen Op, Admin and Pipe Maint.	$59,400	$61,182	$63,017	$64,908	$66,855	$68,861	$70,927	$73,055	$75,246	$77,504	$79,829	$82,223	$84,690	$87,231	$89,848	$92,543	$95,320	$98,179	$101,125	$104,158
Meter Replacement Sinking Fund	$2,500	$2,500	$2,500	$2,500	$2,500	$2,500	$2,500	$2,500	$2,500	$2,500	$2,500	$2,500	$2,500	$2,500	$2,500	$2,500	$2,500	$2,500	$2,500	$2,500
Additional Meter Replacement Fund			$500	$500	$500	$500	$500	$1,000	$1,000	$1,000	$1,000	$1,000	$1,500	$1,500	$1,500	$1,500	$1,500	$2,000	$2,000	$2,000
Pump Station Maintenance	$5,250	$5,408	$5,570	$5,737	$5,909	$6,086	$6,269	$6,457	$6,651	$6,850	$7,056	$7,267	$7,485	$7,710	$7,941	$8,179	$8,425	$8,677	$8,938	$9,206
Electricity	$4,905	$5,052	$5,203	$5,359	$5,520	$5,686	$5,856	$6,032	$6,213	$6,399	$6,591	$6,789	$6,993	$7,203	$7,419	$7,641	$7,870	$8,107	$8,350	$8,600
Additional Electricity			$260	$268	$276	$284	$293	$603	$621	$640	$659	$679	$1,049	$1,080	$1,113	$1,146	$1,181	$1,621	$1,670	$1,720
Expenses Sub-Totals (1% Interest):	***$224,803***	***$226,890***	***$254,799***	***$232,021***	***$234,309***	***$236,666***	***$239,093***	***$267,395***	***$244,980***	***$247,642***	***$250,383***	***$253,207***	***$281,966***	***$259,972***	***$263,069***	***$266,259***	***$269,544***	***$298,833***	***$277,331***	***$280,933***
Expenses Sub-Totals (3.1% Interest):	***$255,239***	***$257,325***	***$285,235***	***$262,456***	***$264,745***	***$267,101***	***$269,529***	***$297,831***	***$275,415***	***$278,077***	***$280,819***	***$283,643***	***$312,401***	***$290,408***	***$293,505***	***$296,694***	***$299,979***	***$329,269***	***$307,766***	***$311,369***
Expenses Sub-Totals (Grant Funding):	***$72,055***	***$74,141***	***$102,051***	***$79,272***	***$81,560***	***$83,917***	***$86,345***	***$114,647***	***$92,231***	***$94,893***	***$97,635***	***$100,459***	***$129,217***	***$107,224***	***$110,320***	***$113,510***	***$116,795***	***$146,084***	***$124,582***	***$128,184***
Expenses Sub-Totals (50% Grant Funding, 1% Interest):	***$148,429***	***$150,516***	***$178,425***	***$155,647***	***$157,935***	***$160,292***	***$162,719***	***$191,021***	***$168,605***	***$171,267***	***$174,009***	***$176,833***	***$205,592***	***$183,598***	***$186,695***	***$189,884***	***$193,170***	***$222,459***	***$200,956***	***$204,559***
Expenses Sub-Totals (2% Interest):	***$193,923***	***$196,009***	***$223,919***	***$201,140***	***$203,428***	***$205,785***	***$208,213***	***$236,515***	***$214,099***	***$216,761***	***$219,503***	***$222,327***	***$251,085***	***$229,092***	***$232,188***	***$235,378***	***$238,663***	***$267,952***	***$246,450***	***$250,052***
Revenue																				
Initial Revenue	$292,763	$292,763	$292,763	$292,763	$292,763	$292,763	$292,763	$292,763	$292,763	$292,763	$292,763	$292,763	$292,763	$292,763	$292,763	$292,763	$292,763	$292,763	$292,763	$292,763
Additional Revenue			$30,008	$30,008	$30,008	$30,008	$30,008	$45,378	$45,378	$45,378	$45,378	$45,378	$60,748	$60,748	$60,748	$60,748	$60,748	$76,118	$76,118	$76,118
Revenue Sub-Totals:	***$292,763***	***$292,763***	***$322,771***	***$322,771***	***$322,771***	***$322,771***	***$322,771***	***$338,141***	***$338,141***	***$338,141***	***$338,141***	***$338,141***	***$353,512***	***$353,512***	***$353,512***	***$353,512***	***$353,512***	***$368,882***	***$368,882***	***$368,882***
Annual (Revenue - Expenses) (1% Interest):	$67,960	$65,873	$67,972	$90,750	$88,462	$86,106	$83,678	$70,746	$93,162	$90,500	$87,758	$84,934	$71,546	$93,539	$90,442	$87,253	$83,967	$70,048	$91,551	$87,948
Net Present Worth (1% Interest):	***$1,220,760***																			
Annual (Revenue - Expenses) (3.1% Interest):	$37,524	$35,438	$37,537	$60,315	$58,027	$55,670	$53,243	$40,311	$62,726	$60,064	$57,323	$54,499	$41,110	$63,104	$60,007	$56,817	$53,532	$39,613	$61,115	$57,513
Net Present Worth (3.1% Interest):	***$767,957***																			

Year	1	2	3	4	5	6	7	8	9	10	11	12	13	14	15	16	17	18	19	20
Alternative C																				
Capital Costs Sub-Totals																				
Backbone	$2,529,000																			
Meter Installation & Main Connection	$534,000																			
Private Side Connection	$207,000																			
North Creek Pump Station Improvements	$273,000																			
Capital Costs Sub-Totals:	***$3,543,000***																			
Expenses																				
Debt Service (1% Interest) OR	$194,393	$194,393	$194,393	$194,393	$194,393	$194,393	$194,393	$194,393	$194,393	$194,393	$194,393	$194,393	$194,393	$194,393	$194,393	$194,393	$194,393	$194,393	$194,393	$194,393
Debt Service (3.1% Interest)	$233,126	$233,126	$233,126	$233,126	$233,126	$233,126	$233,126	$233,126	$233,126	$233,126	$233,126	$233,126	$233,126	$233,126	$233,126	$233,126	$233,126	$233,126	$233,126	$233,126
Debt Service (2% Interest)	$155,093	$155,093	$155,093	$155,093	$155,093	$155,093	$155,093	$155,093	$155,093	$155,093	$155,093	$155,093	$155,093	$155,093	$155,093	$155,093	$155,093	$155,093	$155,093	$155,093
Additional Meters (1 every 5 years)			$25,000					$25,000					$25,000					$25,000		
Gen Op, Admin and Pipe Maint.	$64,500	$66,435	$68,428	$70,481	$72,595	$74,773	$77,016	$79,327	$81,707	$84,158	$86,683	$89,283	$91,962	$94,720	$97,562	$100,489	$103,504	$106,609	$109,807	$113,101
Meter Replacement Sinking Fund	$3,500	$3,500	$3,500	$3,500	$3,500	$3,500	$3,500	$3,500	$3,500	$3,500	$3,500	$3,500	$3,500	$3,500	$3,500	$3,500	$3,500	$3,500	$3,500	$3,500
Additional Meter Replacement Fund			$500	$500	$500	$500	$500	$1,000	$1,000	$1,000	$1,000	$1,000	$1,500	$1,500	$1,500	$1,500	$1,500	$2,000	$2,000	$2,000
Pump Station Maintenance	$5,250	$5,408	$5,570	$5,737	$5,909	$6,086	$6,269	$6,457	$6,651	$6,850	$7,056	$7,267	$7,485	$7,710	$7,941	$8,179	$8,425	$8,677	$8,938	$9,206
Electricity	$4,905	$5,052	$5,203	$5,359	$5,520	$5,686	$5,856	$6,032	$6,213	$6,399	$6,591	$6,789	$6,993	$7,203	$7,419	$7,641	$7,870	$8,107	$8,350	$8,600
Additional Electricity			$260	$268	$276	$284	$293	$603	$621	$640	$659	$679	$1,049	$1,080	$1,113	$1,146	$1,181	$1,621	$1,670	$1,720
Expenses Sub-Totals (1% Interest):	***$272,547***	***$274,787***	***$302,854***	***$280,238***	***$282,693***	***$285,222***	***$287,827***	***$316,311***	***$294,084***	***$296,940***	***$299,881***	***$302,911***	***$331,881***	***$310,106***	***$313,427***	***$316,848***	***$320,372***	***$349,907***	***$328,657***	***$332,520***
Expenses Sub-Totals (3.1% Interest):	***$311,280***	***$313,520***	***$341,587***	***$318,971***	***$321,426***	***$323,955***	***$326,560***	***$355,045***	***$332,817***	***$335,673***	***$338,614***	***$341,644***	***$370,614***	***$348,839***	***$352,160***	***$355,581***	***$359,105***	***$388,640***	***$367,390***	***$371,253***
Expenses Sub-Totals (Grant Funding):	***$78,155***	***$80,394***	***$108,461***	***$85,845***	***$88,300***	***$90,829***	***$93,434***	***$121,919***	***$99,692***	***$102,547***	***$105,489***	***$108,518***	***$137,489***	***$115,713***	***$119,035***	***$122,456***	***$125,979***	***$155,514***	***$134,264***	***$138,127***
Expenses Sub-Totals (50% Grant Funding, 1% Interest):	***$175,351***	***$177,591***	***$205,657***	***$183,041***	***$185,497***	***$188,026***	***$190,631***	***$219,115***	***$196,888***	***$199,744***	***$202,685***	***$205,715***	***$234,685***	***$212,909***	***$216,231***	***$219,652***	***$223,176***	***$252,710***	***$231,461***	***$235,324***
Expenses Sub-Totals (2% Interest):	***$233,247***	***$235,487***	***$263,554***	***$240,938***	***$243,393***	***$245,922***	***$248,527***	***$277,012***	***$254,784***	***$257,640***	***$260,581***	***$263,611***	***$292,581***	***$270,806***	***$274,127***	***$277,548***	***$281,072***	***$310,607***	***$289,357***	***$293,220***
Revenue																				
Initial Revenue	$303,569	$303,569	$303,569	$303,569	$303,569	$303,569	$303,569	$303,569	$303,569	$303,569	$303,569	$303,569	$303,569	$303,569	$303,569	$303,569	$303,569	$303,569	$303,569	$303,569
Additional Revenue			$31,116	$31,116	$31,116	$31,116	$31,116	$47,053	$47,053	$47,053	$47,053	$47,053	$62,991	$62,991	$62,991	$62,991	$62,991	$78,928	$78,928	$78,928
Revenue Sub-Totals:	***$303,569***	***$303,569***	***$334,685***	***$334,685***	***$334,685***	***$334,685***	***$334,685***	***$350,622***	***$350,622***	***$350,622***	***$350,622***	***$350,622***	***$366,560***	***$366,560***	***$366,560***	***$366,560***	***$366,560***	***$382,497***	***$382,497***	***$382,497***
Annual (Revenue - Expenses) (1% Interest):	$31,022	$28,782	$31,831	$54,447	$51,992	$49,463	$46,858	$34,311	$56,538	$53,682	$50,741	$47,711	$34,679	$56,454	$53,132	$49,711	$46,188	$32,590	$53,840	$49,977
Net Present Worth (1% Interest):	***$671,091***																			
Annual (Revenue - Expenses) (3.1% Interest):	($7,711)	($9,951)	($6,902)	$15,714	$13,259	$10,730	$8,125	($4,422)	$17,805	$14,949	$12,008	$8,978	($4,055)	$17,721	$14,399	$10,978	$7,455	($6,143)	$15,107	$11,244
Net Present Worth (3.1% Interest):	***$94,841***																			
Alternative D																				
Capital Costs Sub-Totals																				
Backbone	$3,938,000																			
Meter Installation & Main Connection	$786,000																			
Private Side Connection	$288,000																			
North Creek Pump Station Improvements	$273,000																			
Capital Costs Sub-Totals:	***$5,285,000***																			
Expenses																				
Debt Service (1% Interest) OR	$289,970	$289,970	$289,970	$289,970	$289,970	$289,970	$289,970	$289,970	$289,970	$289,970	$289,970	$289,970	$289,970	$289,970	$289,970	$289,970	$289,970	$289,970	$289,970	$289,970
Debt Service (3.1% Interest)	$347,747	$347,747	$347,747	$347,747	$347,747	$347,747	$347,747	$347,747	$347,747	$347,747	$347,747	$347,747	$347,747	$347,747	$347,747	$347,747	$347,747	$347,747	$347,747	$347,747
Debt Service (2% Interest)	$231,348	$231,348	$231,348	$231,348	$231,348	$231,348	$231,348	$231,348	$231,348	$231,348	$231,348	$231,348	$231,348	$231,348	$231,348	$231,348	$231,348	$231,348	$231,348	$231,348
Additional Meters (2 every 5 years)			$50,000					$50,000					$50,000					$50,000		
Gen Op, Admin and Pipe Maint.	$84,100	$86,623	$89,222	$91,898	$94,655	$97,495	$100,420	$103,432	$106,535	$109,731	$113,023	$116,414	$119,906	$123,504	$127,209	$131,025	$134,956	$139,004	$143,175	$147,470
Meter Replacement Sinking Fund	$6,500	$6,500	$6,500	$6,500	$6,500	$6,500	$6,500	$6,500	$6,500	$6,500	$6,500	$6,500	$6,500	$6,500	$6,500	$6,500	$6,500	$6,500	$6,500	$6,500
Additional Meter Replacement Fund			$1,000	$1,000	$1,000	$1,000	$1,000	$2,000	$2,000	$2,000	$2,000	$2,000	$3,000	$3,000	$3,000	$3,000	$3,000	$4,000	$4,000	$4,000
Pump Station Maintenance	$5,250	$5,408	$5,570	$5,737	$5,909	$6,086	$6,269	$6,457	$6,651	$6,850	$7,056	$7,267	$7,485	$7,710	$7,941	$8,179	$8,425	$8,677	$8,938	$9,206
Electricity	$4,905	$5,052	$5,203	$5,359	$5,520	$5,686	$5,856	$6,032	$6,213	$6,399	$6,591	$6,789	$6,993	$7,203	$7,419	$7,641	$7,870	$8,107	$8,350	$8,600
Additional Electricity			$520	$536	$552	$569	$586	$1,206	$1,243	$1,280	$1,318	$1,358	$2,098	$2,161	$2,226	$2,292	$2,361	$3,243	$3,340	$3,440
Expenses Sub-Totals (1% Interest):	***$390,725***	***$393,552***	***$447,985***	***$401,001***	***$404,107***	***$407,306***	***$410,601***	***$465,598***	***$419,112***	***$422,731***	***$426,459***	***$430,298***	***$485,953***	***$440,047***	***$444,264***	***$448,608***	***$453,082***	***$509,501***	***$464,272***	***$469,186***
Expenses Sub-Totals (3.1% Interest):	***$448,502***	***$451,330***	***$505,762***	***$458,778***	***$461,884***	***$465,083***	***$468,378***	***$523,375***	***$476,889***	***$480,508***	***$484,236***	***$488,076***	***$543,730***	***$497,824***	***$502,041***	***$506,385***	***$510,859***	***$567,278***	***$522,049***	***$526,963***
Expenses Sub-Totals (Grant Funding):	***$100,755***	***$103,582***	***$158,015***	***$111,030***	***$114,136***	***$117,335***	***$120,631***	***$175,628***	***$129,142***	***$132,761***	***$136,489***	***$140,328***	***$195,982***	***$150,077***	***$154,294***	***$158,638***	***$163,112***	***$219,531***	***$174,302***	***$179,216***
Expenses Sub-Totals (50% Grant Funding, 1% Interest):	***$245,740***	***$248,567***	***$303,000***	***$256,016***	***$259,122***	***$262,321***	***$265,616***	***$320,613***	***$274,127***	***$277,746***	***$281,474***	***$285,313***	***$340,967***	***$295,062***	***$299,279***	***$303,623***	***$308,097***	***$364,516***	***$319,287***	***$324,201***
Expenses Sub-Totals (2% Interest):	***$332,102***	***$334,930***	***$389,363***	***$342,378***	***$345,484***	***$348,683***	***$351,978***	***$406,976***	***$360,489***	***$364,109***	***$367,836***	***$371,676***	***$427,330***	***$381,425***	***$385,642***	***$389,986***	***$394,460***	***$450,879***	***$405,650***	***$410,564***
Revenue																				
Initial Revenue	$329,819	$329,819	$329,819	$329,819	$329,819	$329,819	$329,819	$329,819	$329,819	$329,819	$329,819	$329,819	$329,819	$329,819	$329,819	$329,819	$329,819	$329,819	$329,819	$329,819
Additional Revenue			$51,122	$51,122	$51,122	$51,122	$51,122	$85,753	$85,753	$85,753	$85,753	$85,753	$120,384	$120,384	$120,384	$120,384	$120,384	$155,015	$155,015	$155,015
Revenue Sub-Totals:	***$329,819***	***$329,819***	***$380,941***	***$380,941***	***$380,941***	***$380,941***	***$380,941***	***$415,572***	***$415,572***	***$415,572***	***$415,572***	***$415,572***	***$450,203***	***$450,203***	***$450,203***	***$450,203***	***$450,203***	***$484,834***	***$484,834***	***$484,834***
Annual (Revenue - Expenses) (1% Interest):	($60,906)	($63,733)	($67,044)	($20,060)	($23,166)	($26,365)	($29,660)	($50,026)	($3,540)	($7,159)	($10,887)	($14,726)	($35,749)	$10,156	$5,939	$1,595	($2,879)	($24,667)	$20,562	$15,648
Net Present Worth (1% Interest):	***($338,952)***																			
Annual (Revenue - Expenses) (3.1% Interest):	($118,683)	($121,510)	($124,821)	($77,837)	($80,943)	($84,142)	($87,437)	($107,803)	($61,317)	($64,936)	($68,664)	($72,503)	($93,527)	($47,621)	($51,838)	($56,182)	($60,656)	($82,444)	($37,215)	($42,129)
Net Present Worth (3.1% Interest):	***($1,198,528)***																			

Year	1	2	3	4	5	6	7	8	9	10	11	12	13	14	15	16	17	18	19	20
Alternative E																				
Capital Costs Sub-Totals																				
Backbone	$2,468,000																			
Meter Installation & Main Connection	$290,000																			
Private Side Connection	$128,000																			
North Creek Pump Station Improvements	$273,000																			
Capital Costs Sub-Totals:	***$3,159,000***																			
Expenses																				
Debt Service (1% Interest) OR	$173,324	$173,324	$173,324	$173,324	$173,324	$173,324	$173,324	$173,324	$173,324	$173,324	$173,324	$173,324	$173,324	$173,324	$173,324	$173,324	$173,324	$173,324	$173,324	$173,324
Debt Service (3.1% Interest)	$207,859	$207,859	$207,859	$207,859	$207,859	$207,859	$207,859	$207,859	$207,859	$207,859	$207,859	$207,859	$207,859	$207,859	$207,859	$207,859	$207,859	$207,859	$207,859	$207,859
Debt Service (2% Interest)	$138,283	$138,283	$138,283	$138,283	$138,283	$138,283	$138,283	$138,283	$138,283	$138,283	$138,283	$138,283	$138,283	$138,283	$138,283	$138,283	$138,283	$138,283	$138,283	$138,283
Additional Meters (1 every 5 years)			$25,000					$25,000					$25,000					$25,000		
Gen Op, Admin and Pipe Maint.	$65,400	$67,362	$69,383	$71,464	$73,608	$75,817	$78,091	$80,434	$82,847	$85,332	$87,892	$90,529	$93,245	$96,042	$98,923	$101,891	$104,948	$108,096	$111,339	$114,679
Meter Replacement Sinking Fund	$4,000	$4,000	$4,000	$4,000	$4,000	$4,000	$4,000	$4,000	$4,000	$4,000	$4,000	$4,000	$4,000	$4,000	$4,000	$4,000	$4,000	$4,000	$4,000	$4,000
Additional Meter Replacement Fund			$500	$500	$500	$500	$500	$1,000	$1,000	$1,000	$1,000	$1,000	$1,500	$1,500	$1,500	$1,500	$1,500	$2,000	$2,000	$2,000
Pump Station Maintenance	$5,250	$5,408	$5,570	$5,737	$5,909	$6,086	$6,269	$6,457	$6,651	$6,850	$7,056	$7,267	$7,485	$7,710	$7,941	$8,179	$8,425	$8,677	$8,938	$9,206
Electricity	$4,905	$5,052	$5,203	$5,359	$5,520	$5,686	$5,856	$6,032	$6,213	$6,399	$6,591	$6,789	$6,993	$7,203	$7,419	$7,641	$7,870	$8,107	$8,350	$8,600
Additional Electricity			$260	$268	$276	$284	$293	$603	$621	$640	$659	$679	$1,049	$1,080	$1,113	$1,146	$1,181	$1,621	$1,670	$1,720
Expenses Sub-Totals (1% Interest):	***$252,878***	***$255,145***	***$283,240***	***$260,652***	***$263,137***	***$265,697***	***$268,333***	***$296,850***	***$274,655***	***$277,545***	***$280,522***	***$283,588***	***$312,595***	***$290,859***	***$294,220***	***$297,682***	***$301,247***	***$330,825***	***$309,620***	***$313,529***
Expenses Sub-Totals (3.1% Interest):	***$287,413***	***$289,680***	***$317,775***	***$295,187***	***$297,672***	***$300,232***	***$302,868***	***$331,385***	***$309,190***	***$312,080***	***$315,057***	***$318,123***	***$347,130***	***$325,394***	***$328,755***	***$332,217***	***$335,782***	***$365,360***	***$344,155***	***$348,064***
Expenses Sub-Totals (Grant Funding):	***$79,555***	***$81,821***	***$109,916***	***$87,329***	***$89,813***	***$92,373***	***$95,009***	***$123,526***	***$101,332***	***$104,222***	***$107,198***	***$110,264***	***$139,272***	***$117,535***	***$120,896***	***$124,358***	***$127,924***	***$157,502***	***$136,297***	***$140,205***
Expenses Sub-Totals (50% Grant Funding, 1% Interest):	***$166,216***	***$168,483***	***$196,578***	***$173,990***	***$176,475***	***$179,035***	***$181,671***	***$210,188***	***$187,993***	***$190,883***	***$193,860***	***$196,926***	***$225,934***	***$204,197***	***$207,558***	***$211,020***	***$214,585***	***$244,163***	***$222,958***	***$226,867***
Expenses Sub-Totals (2% Interest):	***$217,838***	***$220,105***	***$248,199***	***$225,612***	***$228,097***	***$230,656***	***$233,292***	***$261,809***	***$239,615***	***$242,505***	***$245,482***	***$248,548***	***$277,555***	***$255,818***	***$259,179***	***$262,641***	***$266,207***	***$295,785***	***$274,580***	***$278,489***
Revenue																				
Initial Revenue	$37,056	$37,056	$37,056	$37,056	$37,056	$37,056	$37,056	$37,056	$37,056	$37,056	$37,056	$37,056	$37,056	$37,056	$37,056	$37,056	$37,056	$37,056	$37,056	$37,056
Additional Revenue			$3,798	$3,798	$3,798	$3,798	$3,798	$5,744	$5,744	$5,744	$5,744	$5,744	$7,689	$7,689	$7,689	$7,689	$7,689	$9,635	$9,635	$9,635
Revenue Sub-Totals:	***$37,056***	***$37,056***	***$40,854***	***$40,854***	***$40,854***	***$40,854***	***$40,854***	***$42,800***	***$42,800***	***$42,800***	***$42,800***	***$42,800***	***$44,745***	***$44,745***	***$44,745***	***$44,745***	***$44,745***	***$46,691***	***$46,691***	***$46,691***
Annual (Revenue - Expenses) (1% Interest):	($215,822)	($218,089)	($242,386)	($219,798)	($222,283)	($224,842)	($227,478)	($254,050)	($231,856)	($234,746)	($237,722)	($240,788)	($267,850)	($246,114)	($249,475)	($252,936)	($256,502)	($284,135)	($262,930)	($266,839)
Net Present Worth (1% Interest):	***($3,573,384)***																			
Annual (Revenue - Expenses) (3.1% Interest):	($250,357)	($252,624)	($276,921)	($254,333)	($256,818)	($259,377)	($262,014)	($288,585)	($266,391)	($269,281)	($272,257)	($275,323)	($302,385)	($280,649)	($284,010)	($287,471)	($291,037)	($318,670)	($297,465)	($301,374)
Net Present Worth (3.1% Interest):	***($4,087,179)***																			
Alternative F																				
Capital Costs Sub-Totals																				
Backbone	$3,938,000																			
Meter Installation & Main Connection	$823,000																			
Private Side Connection	$335,000																			
North Creek Pump Station Improvements	$273,000																			
Capital Costs Sub-Totals:	***$5,369,000***																			
Expenses																				
Debt Service (1% Interest) OR	$294,579	$294,579	$294,579	$294,579	$294,579	$294,579	$294,579	$294,579	$294,579	$294,579	$294,579	$294,579	$294,579	$294,579	$294,579	$294,579	$294,579	$294,579	$294,579	$294,579
Debt Service (3.1% Interest)	$353,274	$353,274	$353,274	$353,274	$353,274	$353,274	$353,274	$353,274	$353,274	$353,274	$353,274	$353,274	$353,274	$353,274	$353,274	$353,274	$353,274	$353,274	$353,274	$353,274
Debt Service (2% Interest)	$235,025	$235,025	$235,025	$235,025	$235,025	$235,025	$235,025	$235,025	$235,025	$235,025	$235,025	$235,025	$235,025	$235,025	$235,025	$235,025	$235,025	$235,025	$235,025	$235,025
Additional Meters (2 every 5 years)			$50,000					$50,000					$50,000					$50,000		
Gen Op, Admin and Pipe Maint.	$84,100	$86,623	$89,222	$91,898	$94,655	$97,495	$100,420	$103,432	$106,535	$109,731	$113,023	$116,414	$119,906	$123,504	$127,209	$131,025	$134,956	$139,004	$143,175	$147,470
Meter Replacement Sinking Fund	$7,500	$7,500	$7,500	$7,500	$7,500	$7,500	$7,500	$7,500	$7,500	$7,500	$7,500	$7,500	$7,500	$7,500	$7,500	$7,500	$7,500	$7,500	$7,500	$7,500
Additional Meter Replacement Fund			$1,000	$1,000	$1,000	$1,000	$1,000	$2,000	$2,000	$2,000	$2,000	$2,000	$3,000	$3,000	$3,000	$3,000	$3,000	$4,000	$4,000	$4,000
Pump Station Maintenance	$5,250	$5,408	$5,570	$5,737	$5,909	$6,086	$6,269	$6,457	$6,651	$6,850	$7,056	$7,267	$7,485	$7,710	$7,941	$8,179	$8,425	$8,677	$8,938	$9,206
Electricity	$4,905	$5,052	$5,203	$5,359	$5,520	$5,686	$5,856	$6,032	$6,213	$6,399	$6,591	$6,789	$6,993	$7,203	$7,419	$7,641	$7,870	$8,107	$8,350	$8,600
Additional Electricity			$520	$536	$552	$569	$586	$1,206	$1,243	$1,280	$1,318	$1,358	$2,098	$2,161	$2,226	$2,292	$2,361	$3,243	$3,340	$3,440
Expenses Sub-Totals (1% Interest):	***$396,334***	***$399,161***	***$453,594***	***$406,610***	***$409,715***	***$412,915***	***$416,210***	***$471,207***	***$424,721***	***$428,340***	***$432,068***	***$435,907***	***$491,561***	***$445,656***	***$449,873***	***$454,217***	***$458,691***	***$515,110***	***$469,881***	***$474,795***
Expenses Sub-Totals (3.1% Interest):	***$455,029***	***$457,857***	***$512,289***	***$465,305***	***$468,411***	***$471,610***	***$474,905***	***$529,902***	***$483,416***	***$487,035***	***$490,763***	***$494,603***	***$550,257***	***$504,351***	***$508,569***	***$512,912***	***$517,386***	***$573,806***	***$528,576***	***$533,490***
Expenses Sub-Totals (Grant Funding):	***$101,755***	***$104,582***	***$159,015***	***$112,030***	***$115,136***	***$118,335***	***$121,631***	***$176,628***	***$130,142***	***$133,761***	***$137,489***	***$141,328***	***$196,982***	***$151,077***	***$155,294***	***$159,638***	***$164,112***	***$220,531***	***$175,302***	***$180,216***
Expenses Sub-Totals (50% Grant Funding, 1% Interest):	***$249,044***	***$251,872***	***$306,305***	***$259,320***	***$262,426***	***$265,625***	***$268,920***	***$323,917***	***$277,431***	***$281,050***	***$284,778***	***$288,618***	***$344,272***	***$298,366***	***$302,584***	***$306,927***	***$311,402***	***$367,821***	***$322,592***	***$327,506***
Expenses Sub-Totals (2% Interest):	***$336,780***	***$339,607***	***$394,040***	***$347,055***	***$350,161***	***$353,360***	***$356,655***	***$411,653***	***$365,166***	***$368,786***	***$372,514***	***$376,353***	***$432,007***	***$386,102***	***$390,319***	***$394,663***	***$399,137***	***$455,556***	***$410,327***	***$415,241***
Revenue																				
Initial Revenue	$340,625	$340,625	$340,625	$340,625	$340,625	$340,625	$340,625	$340,625	$340,625	$340,625	$340,625	$340,625	$340,625	$340,625	$340,625	$340,625	$340,625	$340,625	$340,625	$340,625
Additional Revenue			$52,797	$52,797	$52,797	$52,797	$52,797	$88,562	$88,562	$88,562	$88,562	$88,562	$124,328	$124,328	$124,328	$124,328	$124,328	$160,094	$160,094	$160,094
Revenue Sub-Totals:	***$340,625***	***$340,625***	***$393,422***	***$393,422***	***$393,422***	***$393,422***	***$393,422***	***$429,187***	***$429,187***	***$429,187***	***$429,187***	***$429,187***	***$464,953***	***$464,953***	***$464,953***	***$464,953***	***$464,953***	***$500,719***	***$500,719***	***$500,719***
Annual (Revenue - Expenses) (1% Interest):	($55,709)	($58,536)	($60,172)	($13,188)	($16,294)	($19,493)	($22,788)	($42,019)	$4,467	$848	($2,880)	($6,720)	($26,608)	$19,297	$15,080	$10,736	$6,262	($14,391)	$30,838	$25,924
Net Present Worth (1% Interest):	***($222,580)***																			
Annual (Revenue - Expenses) (3.1% Interest):	($114,404)	($117,232)	($118,868)	($71,883)	($74,989)	($78,188)	($81,483)	($100,715)	($54,228)	($57,848)	($61,575)	($65,415)	($85,304)	($39,398)	($43,615)	($47,959)	($52,433)	($73,087)	($27,858)	($32,772)
Net Present Worth (3.1% Interest):	***($1,095,819)***																			