#33

# Additions and Alterations to:

# HEADQUARTERS FIRE STATION

## CITY OF BOTHELL

## PROJECT TEAM


**Owner:** City of Bothell Fire Department
10726 Bearslee Blvd.
Bothell, WA 98011
Phone: (206) 486-1678
Fax: (206) 486-4556

**Architect:** The Cochran Associates
#2 Holly Hill Drive
Mercer Island, WA 98040
Phone: (206) 232-8489

**Structural Engineer:** Richard Hudson & Associates
1605 12th Ave NE
Seattle, WA 98122
Phone: (206) 324-6160
Fax: (206) 324-6248

**Mechanical/ Electrical Consultant:** Interface Engineering
12504 116th Ave. N.E.
Kirkland, WA 98034
Phone: (206) 820-1542
Fax: (206) 820-1628

**Landscape Architect:** Jongejan Gerrard McNeal
23 103rd Avenue N.E.
Bellevue, WA 98004-5689
Phone: (206) 454-5723
Fax: (206) 454-4685

**Civil Enginers:** AKB Consulting Engineers
875 140th Ave. N.E., Ste. 201
Bellevue, WA 98005-3400
Phone: (206) 747-3592
Fax: (206) 747-5461


## PROJECT DATA

| | |
|---|---|
| Project Address: | City of Bothell Fire Department<br>10726 Beardslee Blvd.<br>Bothell, WA 98011 |
| Zoning: | Residential/Multi-Family<br>Room 1.4 |
| Lot Area: | 1.65 Acres = 72,129 sf |
| Lot Coverage:<br>(By Structure) | 50% Allowance<br>(22.5% Actual) |
| Building Area: | |
| Existing building footprint: | 12,508 sf |
| New addition: | 3,748 sf |
| TOTAL: | 16,256 sf |
| | Separation 4 sides<br>Automatic sprinkler system |
| Allowed Building Area: | 3 x 8,000 sf = 24,000 sf |
| Construction Type: | Fire Station Type V-N (sprinklered) |
| Building Type: | Fire Station Type B2 |
| Parking Required: | 1 space per employee<br>Maximum of 26 employees = 26 spaces required |
| Existing Parking Provided: | 1 accessible space<br>46 standard spaces |

EXISTING Building To Have Sprinkler System Complying With UBC-STD 38-1

Glazing U-Factor To Be Certified By Agency Licenced By N.F.R.C.

## ARCHITECTURAL ABBREVIATIONS

| | | | | | | | | | |
|---|---|---|---|---|---|---|---|---|---|
| ABV. | Above | DEPT. | Department | G.B. | Grab Bar | N.R.C | Noise Reduction Coefficient | SHTG. | Sheathing |
| A.F.F. | Above Finish Floor | DTL. | Detail | GND. | Ground | NOM. | Nominal | SHT. | Sheet |
| A.P. | Access Panel | DIAG. | Diagram | G.W.B. | Gypsum Wallboard | N.I.C. | Not In Contract | SH. | Shelf |
| ACOUS. | Acoustical | DIA. | Diameter | | | N.T.S. | Not To Scale | SHWR. | Shower |
| ACT | Acoustic Tile | DIM. | Dimension | HNDRL. | Handrail | NO. | Number | SIM. | Similar |
| ADD. | Addendum | D.W. | Dishwasher | HGR. | Hanger | | | S.D. | Soap Dispenser |
| ADDL. | Additional | DISP. | Dispenser | HBD. | Hardboard | OFF. | Office | S.C. | Solid Core |
| ADH. | Adhesive | DIV. | Division | HDWE. | Hardware | O.C. | On Center | S.T.C. | Sound Transmission Coefficient |
| ADJ. | Adjustable | DR. | Door | HDWD. | Hardwood | OPNG. | Opening | | |
| A/C | Air Conditioning | DBL. | Double | HDR. | Header | OPP. | Opposite | S | South |
| ALT. | Alternate | DN. | Down | HT. | Height | OZ. | Ounce | SPKR. | Speaker |
| ALUM. | Aluminum | DS. | Downspout | H.C. | Hollow Cone | O.D. | Outside Diameter | SPEC. | Specifications |
| A.C.I. | Aluminum Concrete Institute | DWR. | Drawer | H.M. | Hollow Metal | O/O | Out to Out | SQ. | Square |
| ASTM | American Society for Testing Materials | DWG. | Drawing | HORIZ. | Horizontal | O.A. | Overall | SST. | Stainless Steel |
| | | D.F. | Drinking Fountain | H.B. | Hose Bibb | O.H. | Overhead | STD. | Standard |
| A.B. | Anchor Bolt | | | H.W. | Hot Water | | | STL. | Steel |
| ANOD. | Anodized | EA. | Each | H.W.T. | Hot Water Tank | P.T.D/R. | Paper Towel Dispenser/Receptacle | STOR. | Storage |
| ARCH. | Architect, Architectural | E.W. | Each Way | | | | | STRUCT. | Structural |
| ASPH. | Asphalt, Asphaltic | E | East | IN. | Inch | PBD. | Particle Board | SUSP. | Suspended |
| AUTO. | Automatic | ELEC. | Electrical | INCL. | Include | PTN. | Partition | SYM. | Symmetrical |
| AVG. | Average | E.P. | Electrical Panelboard | I.D. | Inside Diameter | PVMT. | Pavement | SYN. | Synthetic |
| | | E.W.C. | Electric Water Cooler | INSUL. | Insulation | PERF. | Perforated | | |
| BKSP. | Backsplash | EL. | Elevation | INT. | Interior | PERIM. | Perimeter | TEL | Telephone |
| BSMT. | Basement | ELEV. | Elevator | INV. | Invert | PLAS. | Plaster | T.V. | Television |
| BRG. | Bearing | EMER. | Emergency | I.E. | Invert Elevation | P. LAM. | Plastic Laminate | TEMP. | Tempered |
| BM. | Bench Mark | ENCL. | Enclosure | | | PL. | Plate | TRD. | Tread |
| BET. | Between | EQ. | Equal | JAN. | Janitor | PLYWD. | Plywood | THK | Thick,Thickness |
| BVL. | Beveled | EQUIP. | Equipment | JT. | Joint | PKT. | Pocket | THR. | Threshold |
| BITUM. | Bituminous | EST. | Estimate | JST. | Joist | POL. | Polished | T.P.H | Toilet paper Holder |
| BLK. | Block | EXIST. | Existing | | | POLY. | Polyethelene | T & G | Tongue & Groove |
| BLKG. | Blocking | EXPAN. | Expansion | KPL. | Kickplate | PV.C. | Polyvinyl Chloride | T.O. | Top of |
| BD. | Board | E.J. | Expansion Joint | KIT. | Kitchen | P.S.F. | Pounds Per Square Foot | T.O.C. | Top of Curb |
| BOT. | Bottom | EXP. | Exposed | K.O. | Knockout | P.S.I. | Pounds Per Square Inch | T.O.P. | Top of Pavement |
| B.M.U. | Brick Masonry Unit | EXT. | Exterior | | | P.C. | Precast | T.O.W. | Top of Wall |
| BLDG. | Building | | | LBL. | Label | PREFAB. | Prefabricated | T.S. | Tubular Steel |
| B.P. | Building Paper | F.O.C. | Face of Concrete | LAB. | Laboratory | PREFIN. | Prefinished | TYP. | Typical |
| B.U. | Built Up | F.O.S. | Face of Stud | L.B. | Lag Bolt | P.TR. | Pressure Treated | | |
| BP | Bypass | FAC. FIN. | Factory Finish | LAM. | Laminate | PROP. | Property | UNFIN. | Unfinished |
| | | FGL. | Fiberglass | LAV. | Lavatory | | | U.N.O. | Unless Noted Otherwise |
| CAB. | Cabinet | FIN. | Finish | LDGR. | Ledger | QUAN. | Quantity | UR. | Urinal |
| CAR. | Carpet | F.F. | Finished Floor | L.H. | Left Hand | Q.T. | Quarry Tile | | |
| C.O | Cased Opening | F.A. | Fire Alarm | L. | Length | | | VJ | V-Joint or Jointed |
| CSMT. | Casement | F.E. | Fire Extinguisher | LT. | Light | RAD. | Radius | V.B. | Vapor Barrier |
| C.I.P. | Cast in Place | F.E.C. | Fire Extinguisher Cabinet | L.W. | Lightweight | R.W.L. | Rain Water Leader | VAR. | Varnish |
| C.I. | Cast Iron | F.H.C. | Fire Hose Cabinet | LTL. | Lintel | RECP. | Receptacle | VNR. | Veneer |
| C.B. | Catch Basin | F.H. | Fire Hydrant | L.L. | Live Load | REWD. | Redwood | VERT. | Vertical |
| CLKG. | Caulking | F.P. | Fire Place | LKR. | Locker | REF. | Reference | V.G. | Vertical Grain |
| CLG. | Ceiling | FPRF. | Fireproof | LVR. | Louver | REFR. | Refrigerator | VEST. | Vestibule |
| CER. | Ceramic | FLG. | Flashing | LB. | Pound | REGTR. | Register | V.C.T. | Vinyl Composition Tile |
| C.T. | Ceramic Tile | F.H.M.S. | Flat Head Machine Screw | | | REINF. | Reinforcing | | |
| CLR. | Clear(ance) | F.H.W.S. | Flat Head Wood Screw | M.B. | Machine Bolt | REQ'D. | Required | WSCT. | Wainscot |
| CLO. | Closet | FLR. | Floor | M.H. | Manhole | RESIL. | Resilient | W.H. | Wall Hung |
| C.W. | Cold Water | F.D. | Floor Drain | MFR. | Manufacturer | R.A. | Return Air | W.C. | Water Closet |
| COL. | Column | FLUOR. | Fluorescent | MAS. | Masonry | REV. | Revision | W.P. | Water Proof |
| COMP. | Composition | FT. | Foot, Feet | M.O. | Masonry Opening | R. | Riser | W.R. | Water Resistant |
| CONC. | Concrete | FTG. | Footing | MTRL. | Material | R&S | Rod & Shelf | W.S. | Water Stop |
| C.M.U. | Concrete Masonry Unit | FDN. | Foundation | MAX. | Maximum | R.D. | Roof Drain | WT. | Weight |
| CONN. | Connection | F.S. | Full Size | MECH. | Mechanical | RFG. | Roofing | W.W.M. | Welded Wire Mesh |
| CONST. | Construction | F.I.O. | Furnished & Installed by | M.C. | Medicine Cabinet | RM. | Room | W. | West |
| CONT. | Continuous | | Owner | MED. | Medium | R.O. | Rough Opening | W.F. | Wide Flange |
| CONTR. | Contractor | F.O.I.C. | Furnished by Owner Installed by Contractor | MEMB. | Membrane | R.S. | Rough Sawn | WDW. | Window |
| COORD. | Coordinate | | | MTL. | Metal | | | W.G. | Wired Glass |
| CORR. | Corridor | FURR. | Furring | MEZZ. | Mezzanine | SFGL. | Safety Glass | W/ | With |
| CNTR. | Counter | | | MLWK. | Millwork | S.N.D. | Sanitary Napkin Dispenser | W/O | Without |
| C.FL. | Counter Flashing | GALV. | Galvanized | MIN. | Minimum | SNDR. | Sanitary Napkin Dispenser/Receptacle | WD. | Wood |
| CTSK. | Countersink | G.I. | Galvanized Iron | MISC. | Miscellaneous | | | W.I. | Wrought Iron |
| CU. | Cubic | G.D. | Garbage Disposal | MOD. | Module | SCHED. | Scheduled(d) | | |
| | | GA. | Gauge | MLDG. | Moulding | S.J. | Scored Joint | YD. | Yard |
| DP. | Dampproofing | GEN. | General | MTD. | Mounted | S.C.D. | Seat Cover Dispenser | | |
| D.L. | Dead Load | GL. | Glass | MULL. | Mullion | SECT. | Section | | |
| DCKG. | Decking | G.M.U. | Glazed Masonry Unit | | | SEL. | Select | | |
| | | G.L.B. | Glu-Lam Beam | NR. | Noise Reduction | S.S. | Service Sink | | |

## SYMBOLS

- REFERENCE GRIDS
- BUILDING SECTION LETTER Sheet where shown
- WALL SECTION NUMBER Sheet where shown
- DETAIL NUMBER Sheet where shown
- INTERIOR ELEVATION NUMBER Sheet where shown
- ROOM/SPACE NUMBER
- DOOR NUMBER/TYPE
- WINDOW/RELITE TYPE
- WALL TYPE
- EQUIPMENT ITEM NUMBER
- REVISION NUMBER
- 00.00' SPOT ELEVATION NUMBER
- EXISTING CONTOURS
- NEW CONTOURS
- ELEVATION POINT
- CENTER LINE
- BREAK LINE
- PROPERTY LINE

## LEGAL DESCRIPTION

PARCEL A:

Lot 4, Hampton's Subdivision, according to plat recorded in Volume 44 of Plats, page 38, in King County, Washington; EXCEPT the South 5 feet of road as conveyed to the City of Bothell by Auditor's File No. 6501606.

PARCEL B:

Lot 5, Hampton's Subdivision, according to plat recorded in Volume 44 of Plats, page 38, in King County, Washington; EXCEPT the South 5 feet of road as conveyed to the City of Bothell by Auditor's File No. 6501607.

PARCEL C:

That portion of the Southeast quarter of the Southwest quarter of Section 5, Township 26 North, Range 5 East, W.M., in King County, Washington, lying West of Hampton's Subdivision, according to plat recorded in Volume 44 of Plats, page 38, in King County, Washington, and lying southerly and easterly of the following described line:

Beginning on the South line of said subdivision 500 feet westerly of the Southeast corner thereof; thence northwesterly along a line which, if projected, would intersect the center-line of Ross Road (County Road Number 172) at a point 560 feet southeasterly, measured along said line, from said centerline thence northeasterly to the Northwest corner of Lot 4 of said Hampton's Subdivision and the terminus of said line; EXCEPT the southerly 15 feet thereof.

## VICINITY MAP

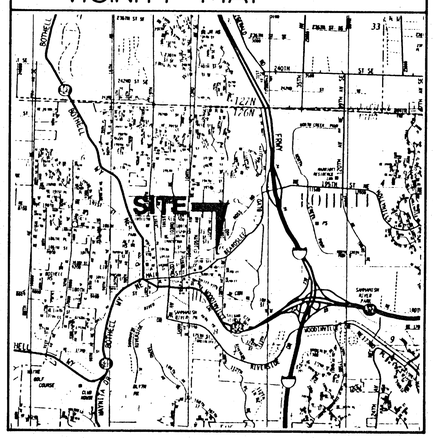


## SHEET INDEX


A0 Cover Sheet

A1 Site Plan and Site Details
A2 Second Floor Plans and enlarged Floor Plans
A3 Door & Finish Schedules, Door and window Details
A4 Exterior Elevations, Building Sections
A5 Reflected Ceiling Plan
A6 Interior Elevations
A7 Wall Sections and Details

S1 Foundation plan & Roof Framing Plan
S2 Sections

C1 Paving, Grading and Drainage Plan
C2 Water, Sewer and Utilities Plan
C3 Standard Civil Specifications
C4 Standard Civil Specifications

L1 Landscape Irrigation Plan
L2 Landscape Planting Plan


CITY OF BOTHELL
DEPT. OF COM. DEV.
BUILDING DIVISION
APPROVED


the Cochran Associates
#2 Holly Hill Drive
Mercer Island, WA 98040
206/232-0272


REGISTERED ARCHITECT
STATE OF WASHINGTON

Revisions:

Project Title:
Additions and Alterations to:
HEADQUARTERS FIRE STATION
CITY OF BOTHELL

Sheet Title:
Cover Sheet

Scale: NONE
Project No.: 94-03
Date: 1-9-95

Sheet Number:
A0

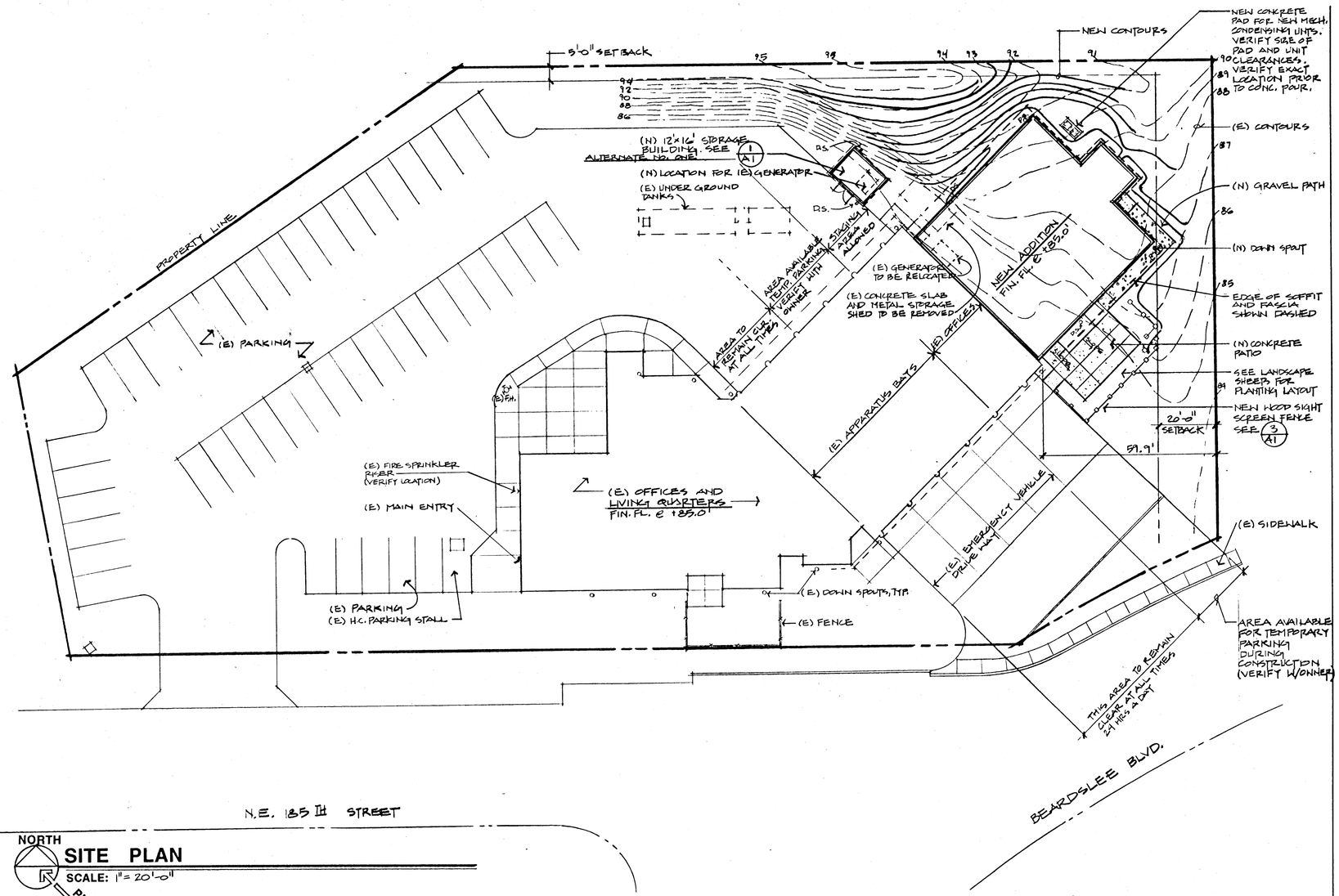


## SITE PLAN

SCALE: 1" = 20'-0"

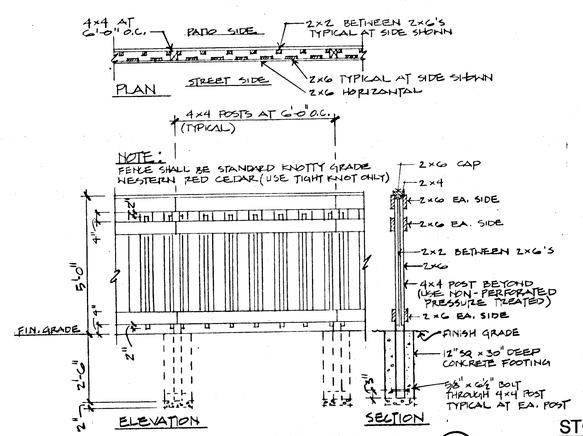


## PATIO VIEW SCREEN FENCE

3/8"=1'-0"

3

NOTE: FINISHES TO MATCH NEW ADDITION

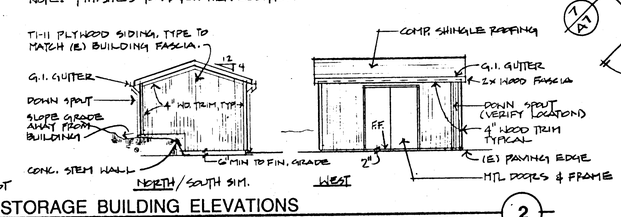


## STORAGE BUILDING ELEVATIONS

1/8"=1'-0" ALTERNATE NO. ONE

2

NOTE:
6" x 7" CONC. SLAB FOR RE-LOCATED GENERATOR TO BE IN BASE BID. VERIFY SLAB SIZE REQ'D PRIOR TO CONSTRUCTION.

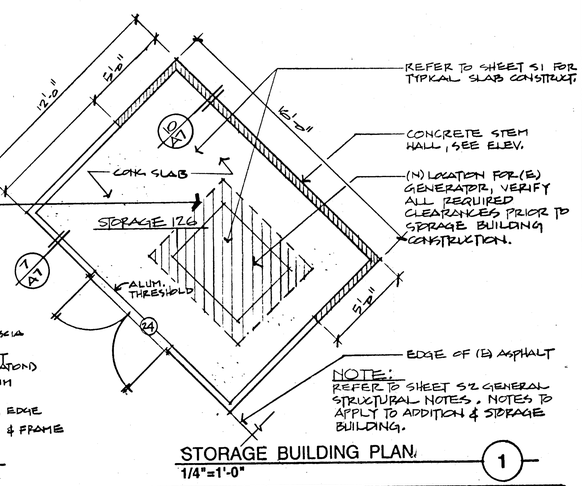


## STORAGE BUILDING PLAN

1/4"=1'-0"

1


the Cochran Associates

#2 Holly Hill Drive
Mercer Island, WA 98040
206/232-0272


Revisions:

Project Title:

Additions and Alterations to:
HEADQUARTERS FIRE STATION
CITY OF BOTHELL

Sheet Title:

CITY OF BOTHELL
DEPT. OF COM. DEV.
BUILDING DIVISION
APPROVED

Scale: VARIES
Project No.: 94-03
Date: 1-5-95

Sheet Number:

A1

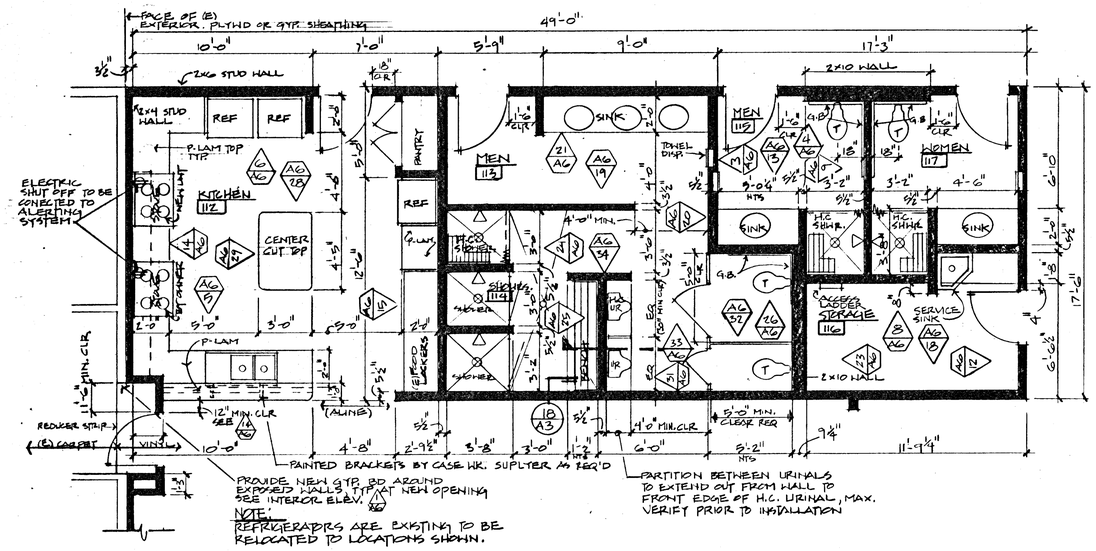


PROVIDE NEW GYP. BD AROUND EXPOSED WALLS TYP. AT NEW OPENING SEE INTERIOR ELEV.

NOTE:
REFRIGERATORS ARE EXISTING TO BE RELOCATED TO LOCATIONS SHOWN.

## ENLARGED PLAN

SCALE: 1/4"=1'-0"

(1)

NOTE:
INSULATE PERIMITER RESTROOM & SHOWER WALLS AND RESTROOM COMMON WALLS FOR SOUND

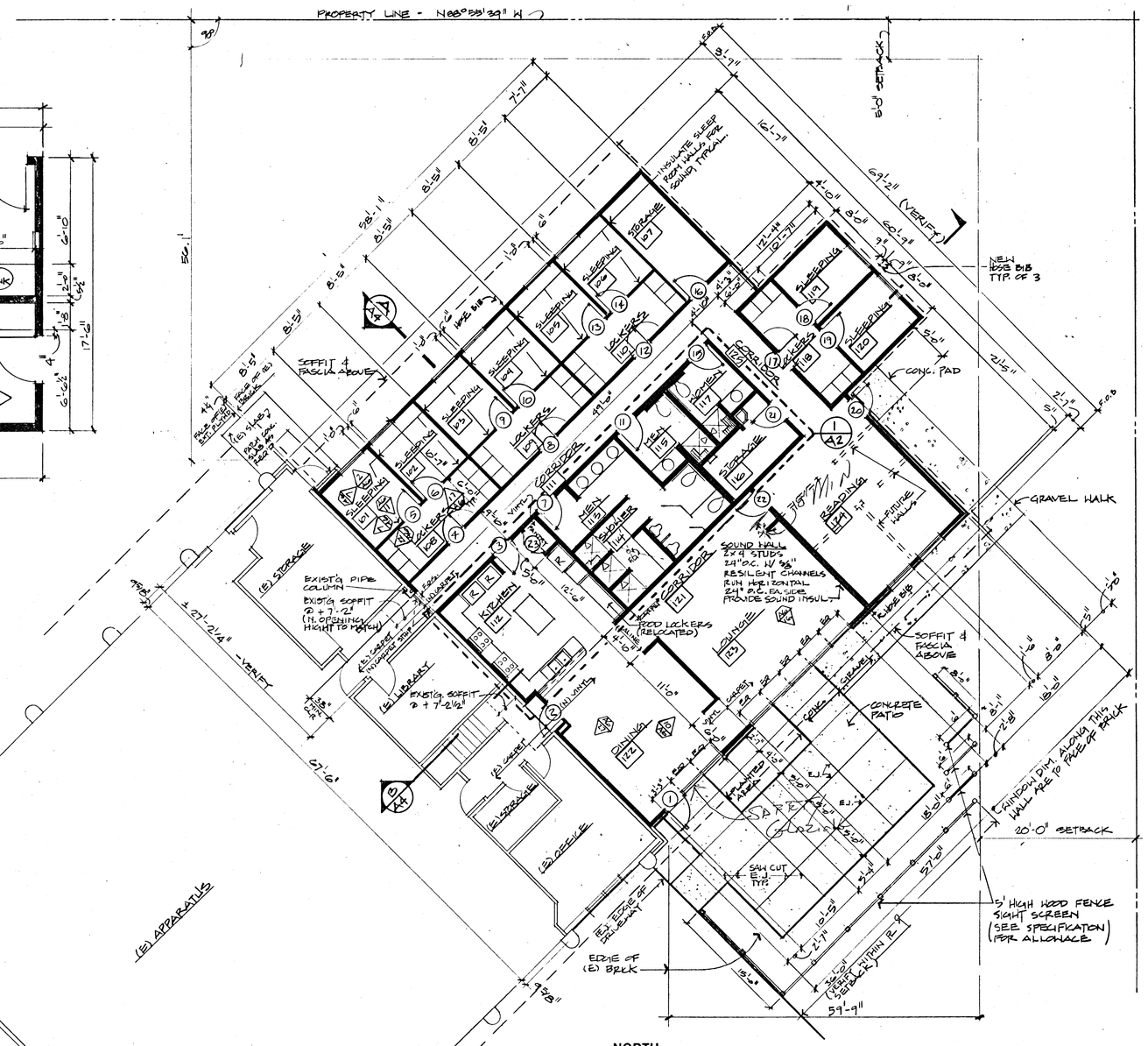


## FLOOR PLAN

3,748 S.F.

SCALE: 1/8"=1'-0"

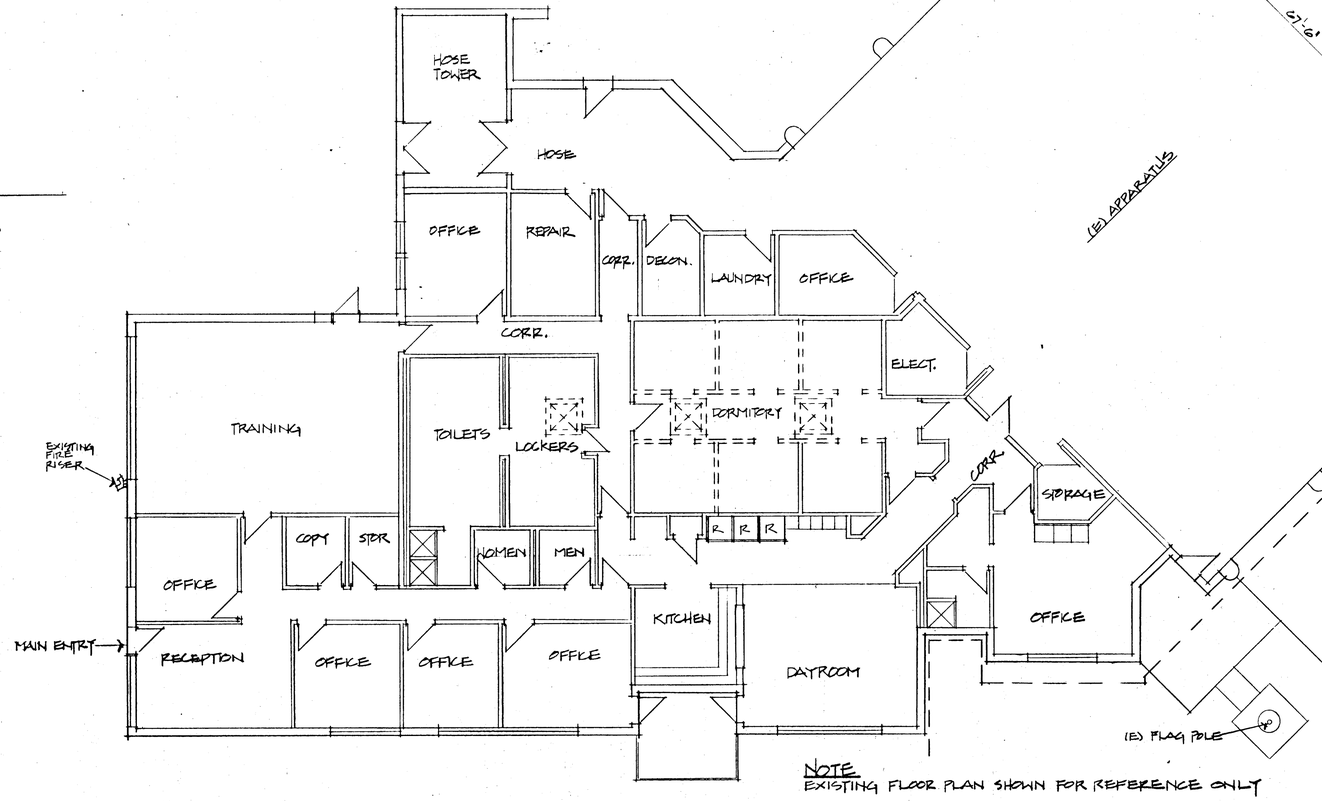


NOTE
EXISTING FLOOR PLAN SHOWN FOR REFERENCE ONLY

FURNACE TO BE DIRECT VENT OR PROVIDED WITH COMBUSTION AIR PER CHAP 6 UMC
(1 HIGH, 1 LOW INLET)

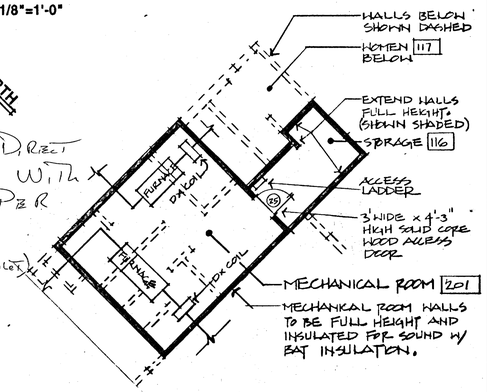


## MECHANICAL ROOM PLAN

SCALE: 1/8"=1'-0"


the Cochran Associates

#2 Holly Hill Drive
Mercer Island, WA 98040
206/232-0272


Revisions:

Project Title:

Additions and Alterations to:
HEADQUARTERS FIRE STATION
CITY OF BOTHELL

Sheet Title:

CITY OF BOTHELL
DEPT. OF COM. DEV.
BUILDING DIVISION
APPROVED

Scale: VARIES
Project No.: 94-03
Date: 1-3-95

Sheet Number:

A2

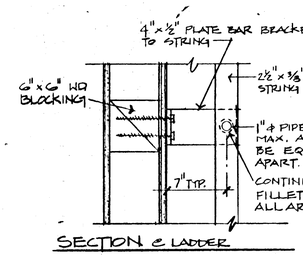


SECTION @ LADDER

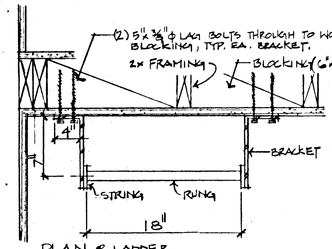


PLAN @ LADDER

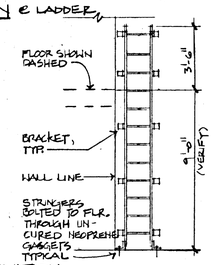


ELEVATION @ LADDER

**LADDER DETAIL** 20
NO SCALE

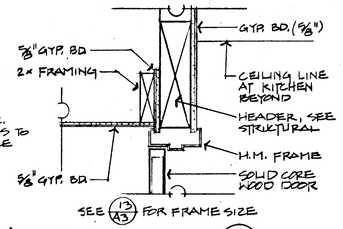


**HEAD** 14
1 1/2"=1'-0"

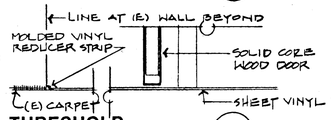


**THRESHOLD** 15
1 1/2"=1'-0"

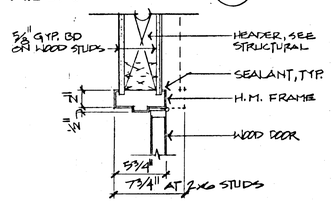


**HEAD** JAMB SIM. 16
1 1/2"=1'-0"

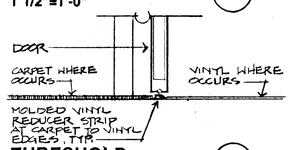


**THRESHOLD** 17
1 1/2"=1'-0"

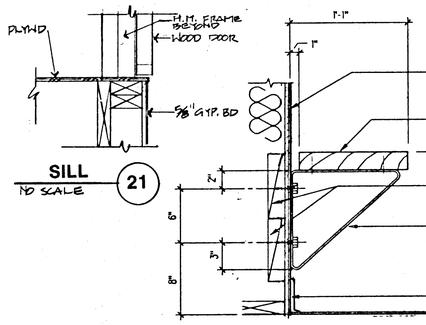


**SILL** 21
NO SCALE

BENCH DETAIL 18
SCALE: 1 1/2" = 1'-0"

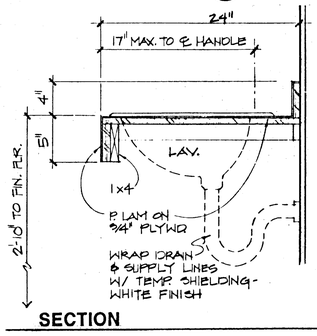


**SECTION** 19

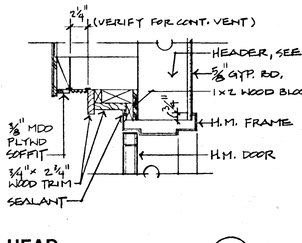


**HEAD** 10
1 1/2"=1'-0"

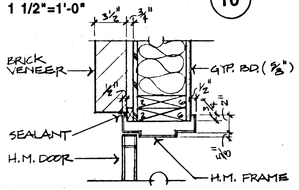


**JAMB** 11
1 1/2"=1'-0"

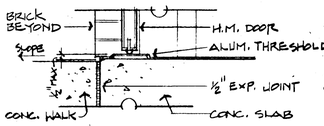


**THRESHOLD** 12
1 1/2"=1'-0"

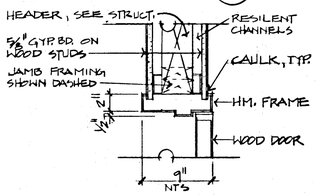


**HEAD / JAMB SIM** 13
1 1/2"=1'-0"

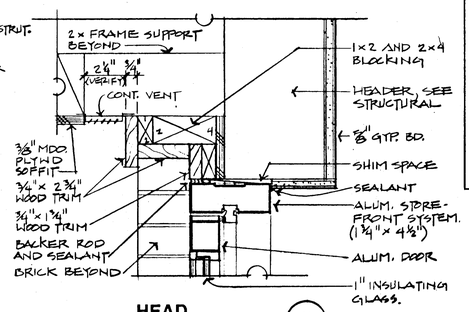


**HEAD** 7
3"=1'-0"

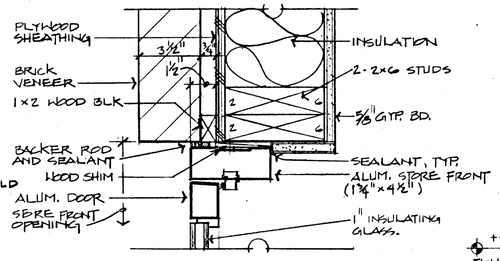


**JAMB** 8
3"=1'-0"

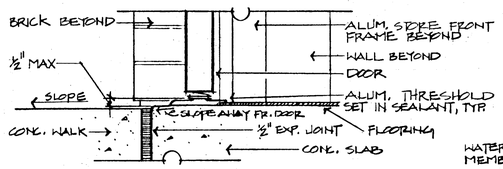


**THRESHOLD** 9
3"=1'-0"

## ROOM FINISH SCHEDULE

| NO. | ROOM NAME | FLOOR MTRL. | FLOOR BASE | N. WALL MTRL. | N. WALL FIN. | E. WALL MTRL. | E. WALL FIN. | S. WALL MTRL. | S. WALL FIN. | W. WALL MTRL. | W. WALL FIN. | CEILING MTRL. | CEILING FIN. | HT. | REMARKS |
|---|---|---|---|---|---|---|---|---|---|---|---|---|---|---|---|
| 101 | SLEEPING | 2 | 3 | 1 | 1 | 1 | 1 | 1 | 1 | 1 | 1 | 1 | 2 | 8'-0" | |
| 102 | SLEEPING | 2 | 3 | 1 | 1 | 1 | 1 | 1 | 1 | 1 | 1 | 1 | 2 | 8'-0" | |
| 103 | SLEEPING | 2 | 3 | 1 | 1 | 1 | 1 | 1 | 1 | 1 | 1 | 1 | 2 | 8'-0" | |
| 104 | SLEEPING | 2 | 3 | 1 | 1 | 1 | 1 | 1 | 1 | 1 | 1 | 1 | 2 | 8'-0" | |
| 105 | SLEEPING | 2 | 3 | 1 | 1 | 1 | 1 | 1 | 1 | 1 | 1 | 1 | 2 | 8'-0" | |
| 106 | SLEEPING | 2 | 3 | 1 | 1 | 1 | 1 | 1 | 1 | 1 | 1 | 1 | 2 | 8'-0" | |
| 107 | STORAGE | 1 | 4 | 1 | 1 | 1 | 1 | 1 | 1 | 1 | 1 | 2 | 1 | 8'-0" | |
| 108 | LOCKERS | 2 | 3 | 1 | 1 | 1 | 1 | 1 | 1 | 1 | 1 | 1 | 2 | 8'-0" | |
| 109 | LOCKERS | 2 | 3 | 1 | 1 | 1 | 1 | 1 | 1 | 1 | 1 | 1 | 2 | 8'-0" | |
| 110 | LOCKERS | 2 | 3 | 1 | 1 | 1 | 1 | 1 | 1 | 1 | 1 | 1 | 2 | 8'-0" | |
| 111 | CORRIDOR | 2 | 3 | 1 | 1 | 1 | 1 | 1 | 1 | 1 | 1 | 1 | 2 | 8'-0" | |
| 112 | KITCHEN | 1 | 4 | 1 | 1 | 1 | 1 | 1 | 1 | 1 | 1 | 2 | 1 | 8'-0" | |
| 113 | MEN | 1 | 4 | 1 | 1 | 1,2 | 1,2 | 1,2 | 1,2 | 1,2 | 1,2 | 2 | 1 | 8'-0" | 1, 3 |
| 114 | MEN SHOWR. | 1 | 4 | 1 | 1 | 1 | 1 | 1 | 1 | 1 | 1 | 2 | 1 | 8'-0" | 1, 3 |
| 115 | MEN | 1 | 4 | 1,2 | 1,2 | 1,2 | 1,2 | 1 | 1 | 1 | 1 | 2 | 1 | 8'-0" | 1, 3 |
| 116 | STORAGE | 1 | 4 | 1,2 | 1,2 | 1 | 1 | 1 | 1 | 1 | 1 | 2 | 1 | (VARIES) | 1 |
| 117 | WOMEN | 1 | 4 | 1,2 | 1,2 | 1 | 1 | 1 | 1 | 1,2 | 1,2 | 2 | 1 | 8'-0" | 1, 3 |
| 118 | LOCKERS | 2 | 3 | 1 | 1 | 1 | 1 | 1 | 1 | 1 | 1 | 1 | 2 | 8'-0" | |
| 119 | SLEEPING | 2 | 3 | 1 | 1 | 1 | 1 | 1 | 1 | 1 | 1 | 1 | 2 | 8'-0" | |
| 120 | SLEEPING | 2 | 3 | 1 | 1 | 1 | 1 | 1 | 1 | 1 | 1 | 1 | 2 | 8'-0" | |
| 121 | CORRIDOR | 2 | 3 | 1 | 1 | 1 | 1 | 1 | 1 | 1 | 1 | 1 | 2 | 9'-0" | |
| 122 | DINING | 1 | 3 | 1 | 1 | 1 | 1 | 1 | 1 | 1 | 1 | 1 | 2 | 9'-0" | 2 |
| 123 | LOUNGE | 2 | 3 | - | - | 1 | 1 | 1 | 1 | 1 | 1 | 1 | 2 | 9'-0" | |
| 124 | READING | 2 | 3 | 1 | 1 | 1 | 1 | 1 | 1 | 1 | 1 | 1 | 2 | 8'-0" | |
| 125 | CORRIDOR | 2 | 3 | - | - | 1 | 1 | - | - | 1 | 1 | 1 | 2 | 8'-0" | |
| 201 | MECHANICAL | 5 | — | 1 | — | 1 | — | 1 | — | 1 | — | 1 | — | (VARIES) | |

* REMARKS
1. SEE INTERIOR ELEVATIONS FOR EXTENT OF FIBERGLASS WAINSCOT PANELS
2. SEE FLOOR PLAN FOR EXTENT OF SHEET VINYL FLOOR AT DINING AREA
3. PROVIDE SEAMLESS HEAT WELDED SHEET VINYL FLOORING & COVED BASE AT RESTROOMS

## FINISH MATERIAL LIST

| FLOOR/BASE | | WALLS/WAINSCOTS | | CEILING | | FINISHES | |
|---|---|---|---|---|---|---|---|
| 1 | SHEET VINYL | 1 | GYP. WALL BD. | 1 | SUSPENDED ACT (2'X2') | 1 | PAINT |
| 2 | CARPET | 2 | FIBERGLASS PANEL | 2 | GYP. WALL BD. | 2 | FACTORY FINISH |
| 3 | RUBBER BASE | | | | | | |
| 4 | COVED SHT VYL. BASE | | | | | | |
| 5 | PLYWOOD | | | | | | |

## DOOR SCHEDULE

| NO | WDTH | HIGHT | THICK | TYPE | MTRL | FIN. | GL. | LABL | HDWE | TYPE | MTRL | FIN. | GLZ | HEAD | JAMB | THRES | REMARKS | |
|---|---|---|---|---|---|---|---|---|---|---|---|---|---|---|---|---|---|---|
| | | | | | | | | (NONE) | | | | | | | | | | |
| 1 | 3'-0" | 6'-10" | 2" | A | ALUM | *FACT. | B | | 1 | 1 | ALUM | FACT. | | 7/A3 | 8/A3 | 9/A3 | *Factory fin. see spec. | SEE REMARK #1 BELOW |
| 2 | 3'-0" | 7'-0" | 1 3/4" | B | WD. | *S&V | B | | 2 | 2 | MTL | PAINT | | 1/A3 | 3/A3 | 15/A3 | *Stain and varnish | |
| 3 | 3'-0" | 7'-0" | 1 3/4" | C | WD. | *S&V | A | | 3 | 2 | MTL | PAINT | | 2/A3 | 3/A3 | 17/A3 | | |
| 4 | 3'-0" | 7'-0" | 1 3/4" | D | WD. | *S&V | - | | 4 | 2 | MTL | PAINT | | | | | | |
| 5 | 3'-0" | 7'-0" | 1 3/4" | D | WD. | *S&V | - | | 5 | 2 | MTL | PAINT | | | | | | |
| 6 | 3'-0" | 7'-0" | 1 3/4" | D | WD. | *S&V | - | | 5 | 2 | MTL | PAINT | | | | | | |
| 7 | 3'-0" | 7'-0" | 1 3/4" | D | WD. | *S&V | - | | 8 | 2 | MTL | PAINT | | | | | | |
| 8 | 3'-0" | 7'-0" | 1 3/4" | D | WD. | *S&V | - | | 4 | 2 | MTL | PAINT | | | | | | |
| 9 | 3'-0" | 7'-0" | 1 3/4" | D | WD. | *S&V | - | | 5 | 2 | MTL | PAINT | | | | | | |
| 10 | 3'-0" | 7'-0" | 1 3/4" | D | WD. | *S&V | - | | 5 | 2 | MTL | PAINT | | | | | | |
| 11 | 3'-0" | 7'-0" | 1 3/4" | D | WD. | *S&V | - | | 8 | 2 | MTL | PAINT | | | | | | |
| 12 | 3'-0" | 7'-0" | 1 3/4" | D | WD. | *S&V | - | | 4 | 2 | MTL | PAINT | | | | | | |
| 13 | 3'-0" | 7'-0" | 1 3/4" | D | WD. | *S&V | - | | 5 | 2 | MTL | PAINT | | | | | | |
| 14 | 3'-0" | 7'-0" | 1 3/4" | D | WD. | *S&V | - | | 5 | 2 | MTL | PAINT | | | | | | |
| 15 | 3'-0" | 7'-0" | 1 3/4" | D | WD. | *S&V | - | | 8 | 2 | MTL | PAINT | | | | | | |
| 16 | 3'-0" | 7'-0" | 1 3/4" | D | WD. | *S&V | - | | 6 | 2 | MTL | PAINT | | | | | | |
| 17 | 3'-0" | 7'-0" | 1 3/4" | D | WD. | *S&V | - | | 4 | 2 | MTL | PAINT | | | | | | |
| 18 | 3'-0" | 7'-0" | 1 3/4" | D | WD. | *S&V | - | | 5 | 2 | MTL | PAINT | | | | | | |
| 19 | 3'-0" | 7'-0" | 1 3/4" | D | WD. | *S&V | - | | 5 | 2 | MTL | PAINT | | | | | | |
| 20 | 3'-0" | 6'-10" | 1 3/4" | E | H.MTL | PAINT | - | | 10 | 1 | MTL | PAINT | | 9/A3 | 3/A3 | 13/A3 | SEE REMARK #1 | |
| 21 | 3'-0" | 7'-0" | 1 3/4" | D | WD. | *S&V | - | | 7 | 2 | MTL | PAINT | | 5/A3 | 3/A3 | 1/A3 | | |
| 22 | 3'-0" | 7'-0" | 1 3/4" | C | WD. | *S&V | A | | 9 | 2 | MTL | PAINT | | 3/A3 | 3/A3 | 17/A3 | | |
| 23 | 3'-6" | 7'-0" | 1 3/4" | F | WD. | *S&V | - | | 11 | 2 | MTL | PAINT | | 6/A3 | 3/A3 | 17/A3 | 1'-9" DOUBLE | |
| 24 | 3'-0" | 7'-0" | 1¾" | E | H-MTL | PAINT | - | | 12 | 2 | MTL | PAINT | | 8/A3 | 8/A3 | 18/A3 PLAN | 2 AT 3'-0" (DOUBLE) | |
| 25 | 3'-0" | 4'-3" | 1¾" | D | WD | S&V | - | | 13 | 1 | MTL | PAINT | | 6/A3 | 3/A3 | 21/A3 | ACCESS DOOR | |

* GLAZING (GL.)
A = TEMPERED GLASS
B = INSULATED TEMPERED GLAZING

* REMARKS
1 TOOLED CONCRETE EDGE AT THRESHOLD

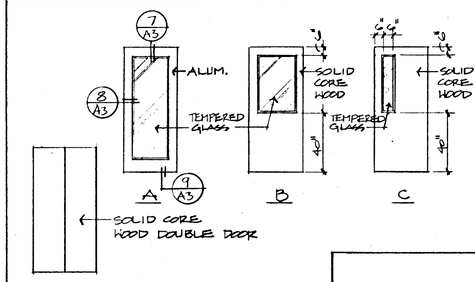


**DOOR TYPES**

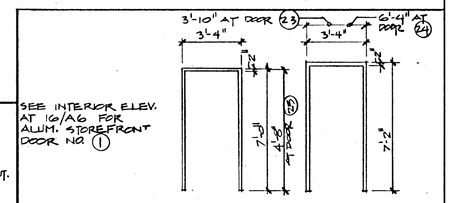


**FRAME TYPES**

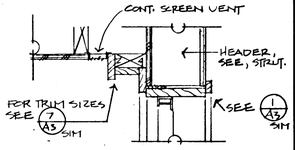


**HEAD** 4

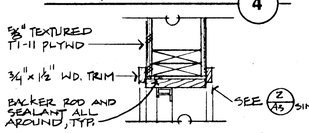


**JAMB** 4A

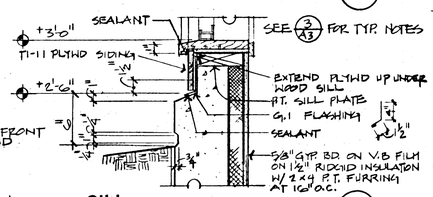


**SILL** 5
1 1/2"=1'-0"

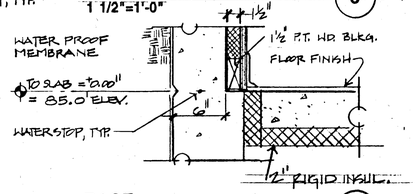


**BASE** 6
1 1/2"=1'-0"

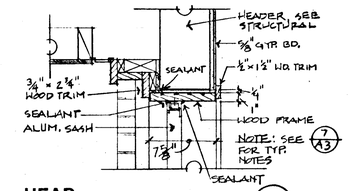


**HEAD** 1
1 1/2"=1'-0"

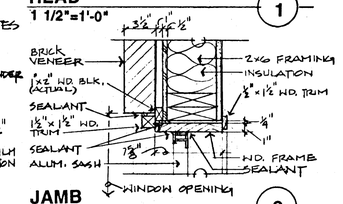


**JAMB** 2
1 1/2"=1'-0"

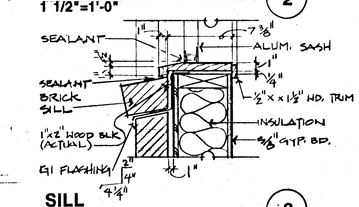


**SILL** 3
1 1/2"=1'-0"


the Cochran Associates
#2 Holly Hill Drive
Mercer Island, WA 98040
206/232-0272


Revisions:

Project Title:
Additions and Alterations to:
HEADQUARTERS FIRE STATION
CITY OF BOTHELL

CITY OF BOTHELL
DEPT. OF COM. DEV.
BUILDING DIVISION
APPROVED

Scale: VARIES
Project No.: 9403
Date: 1-3-95
Sheet Number:
A3

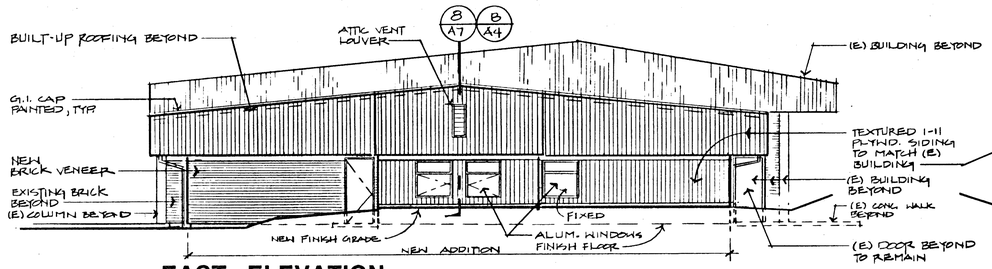


## EAST ELEVATION

SCALE: 1/8"=1'-0"

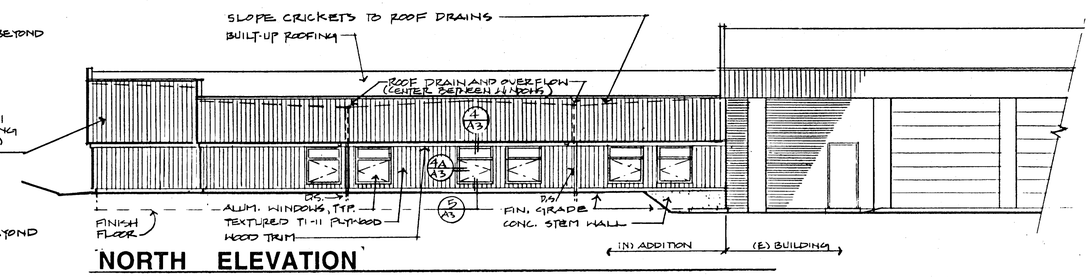


## NORTH ELEVATION

SCALE: 1/8"=1'-0"

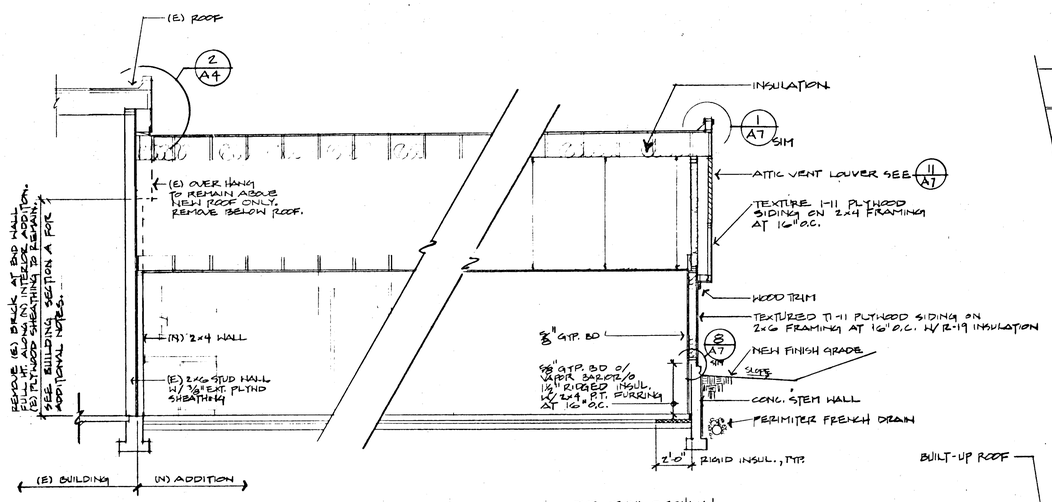


## BUILDING SECTION B

SCALE: 1/4"=1'-0"

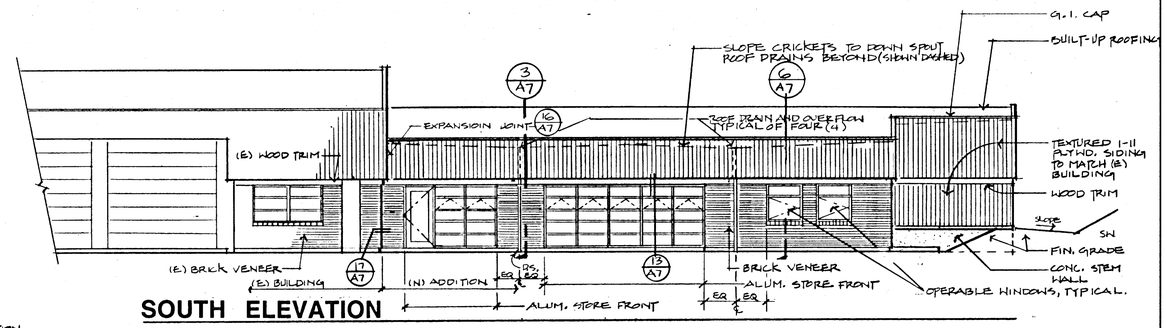


## SOUTH ELEVATION

SCALE: 1/8"=1'-0"

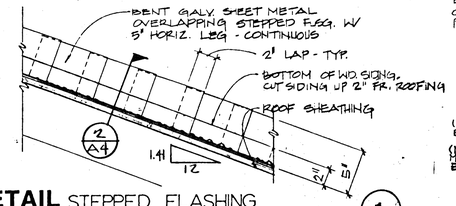


## DETAIL STEPPED FLASHING

NO SCALE

1

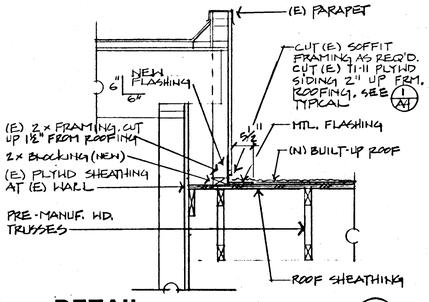


## DETAIL

SCALE: 3/4"=1'-0"

2

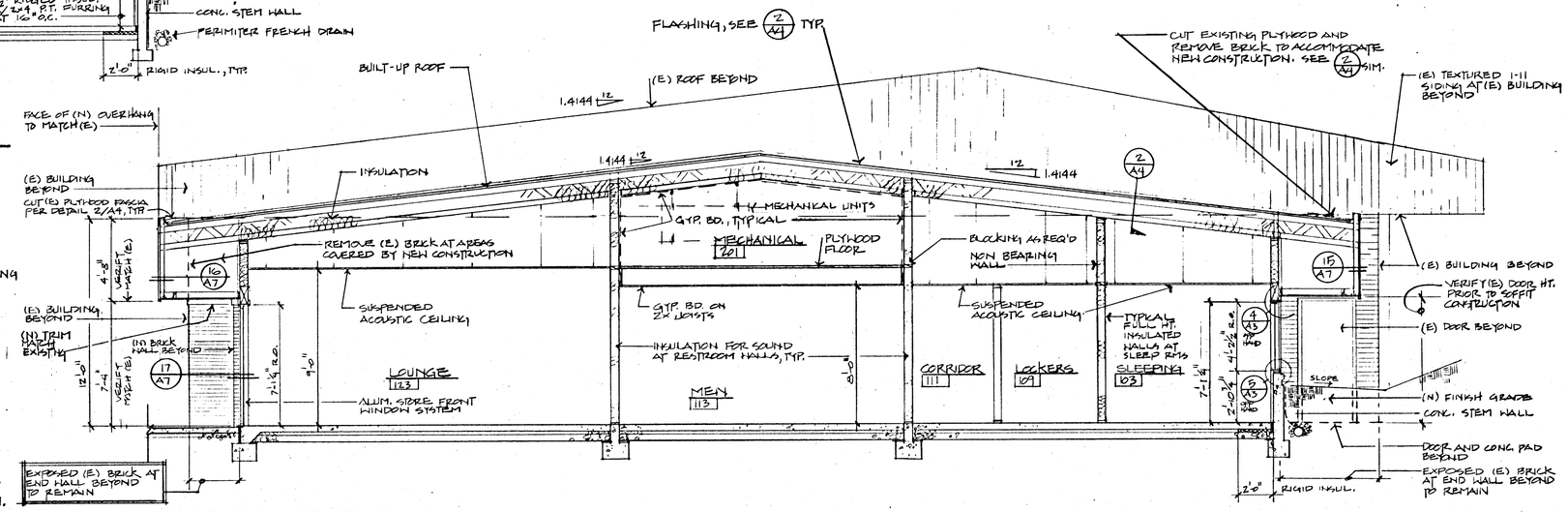


## BUILDING SECTION A

SCALE: 1/4"=1'-0"


the Cochran Associates

#2 Holly Hill Drive
Mercer Island, WA 98040
206/232-0272


Revisions:

Project Title:

Additions and Alterations to:
HEADQUARTERS FIRE STATION
CITY OF BOTHELL

CITY OF BOTHELL
DEPT. OF COM. DEV.
BUILDING DIVISION
APPROVED

Scale:
Project No.:
Date:

Sheet Number:

A4

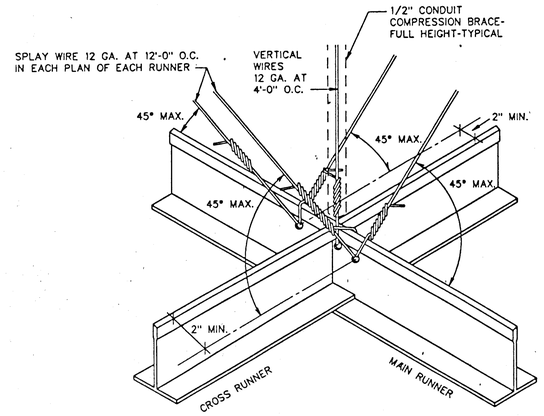


## SEISMIC BRACING DETAIL (A)

NO SCALE

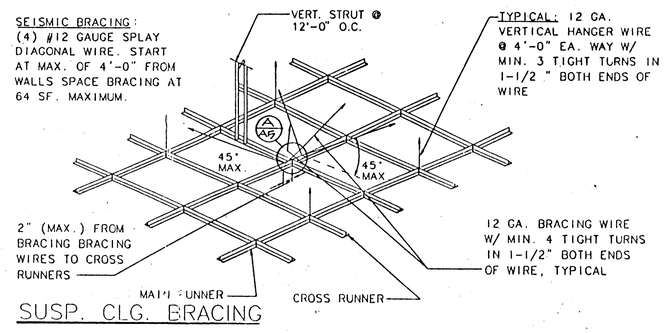


## SUSP. CLG. BRACING

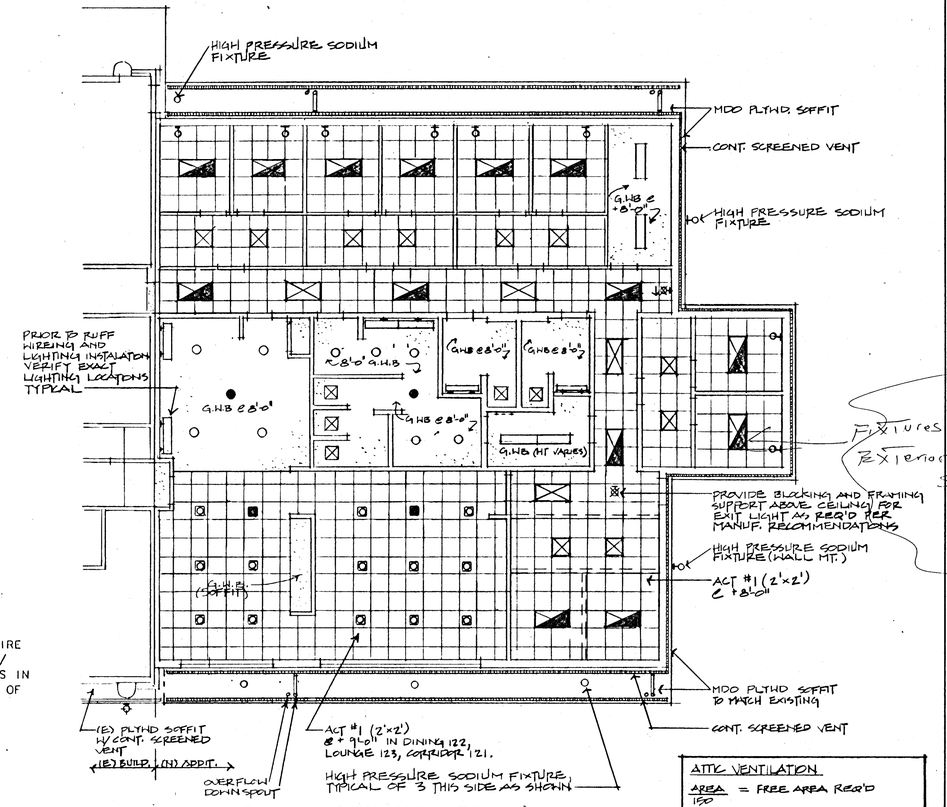


## REFLECTED CEILING PLAN

SCALE: 1/8"=1'-0"

**ATTIC VENTILATION**

AREA / 150 = FREE AREA REQ'D

3,748 S.F. / 150 = 25 S.F. = 3600 S.I

VENT = 11.5 S.I / LIN. FOOT FOR SPECIFIED SOFFIT VENT

3600 S.I / 11.5 S.I/LIN.FT = 313 L.F. REQ'D

316 L.F. PROVIDED

**LEGEND**

| | |
|---|---|
| | WALL MOUNTED INCANDESCENT FIXTURE |
| | RECESSED DOWNLIGHT |
| | RECESSED FLUORESCENT FIXTURE |
| | SURFACE MOUNT FLUORESCENT FIXTURE |
| | RECESSED DOWNLIGHT |
| | FIRE CALL SYSTEM RECESSED DOWNLIGHT FIXTURE CIRCUITED TO THE EXISTING EMERGENCY PANEL AND TYP. ELECT. SYSTEM |
| | FIRE CALL SYSTEM RECESSED FLUORESCENT FIXTURE CIRCUITED TO THE EXISTING EMERGENCY PANEL AND TYP. ELECT. SYSTEM |
| | FIRE CALL SYSTEM RECESSED DOWNLIGHT FIXTURE CIRCUITED TO THE EXISTING EMERGENCY PANEL AND TYP. ELECT. SYSTEM |
| | 2' X 2' LAY - IN ACT. CEILING |
| | GYPSUM WALL BOARD CEILING |
| | EXIT SIGNS |

**NOTE:**
FIRE SPRINKLER HEADS, MECHANICAL AND ELECTRICAL ALARMS, DETECTORS, SPEAKERS, DIFFUSERS, GRILLES, ETC. SHALL BE MOUNTED IN AN ORDERLY AND ALIGNED PATTERN WHERE POSSIBLE, VERIFY LOCATIONS WITH ARCHITECT PRIOR TO INSTALLATION.


the Cochran Associates
#2 Holly Hill Drive
Mercer Island, WA 98040
206/232-0272


Revisions:

Project Title:
Additions and Alterations to:
HEADQUARTERS FIRE STATION
CITY OF BOTHELL

~~CITY OF BOTHELL~~
Sheet Title:
DEPT. OF COM. DEV.
BUILDING DIVISION
APPROVED

Scale:
Project No.:
Date:

Sheet Number:
A5

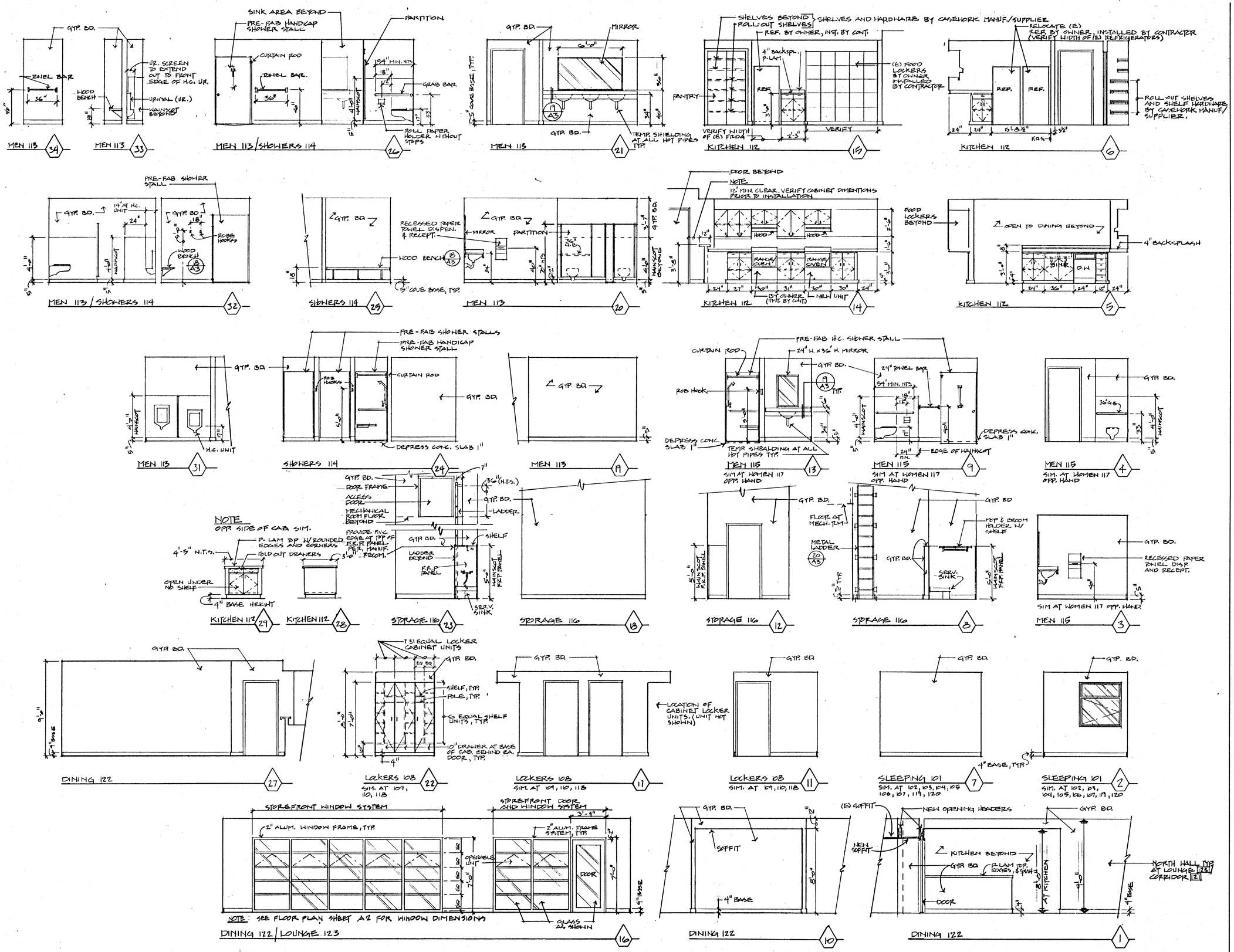



the Cochran Associates

#2 Holly Hill Drive
Mercer Island, WA 98040
206/232-0272


Revisions:

Project Title:

Additions and Alterations to:
HEADQUARTERS FIRE STATION
CITY OF BOTHELL

CITY OF BOTHELL
DEPT. OF COM. DEV.
BUILDING DIVISION
APPROVED

Scale:

Project No.:

Date:

Sheet Number:

A6

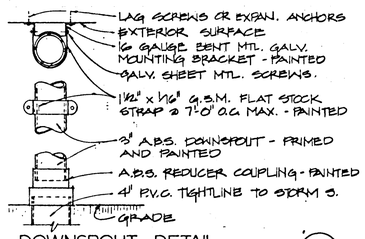


**DOWNSPOUT DETAIL** (9)
SCALE

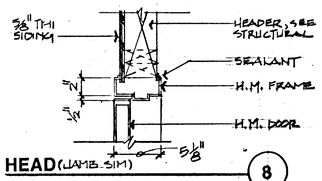


**HEAD** (JAMB SIM) (8)

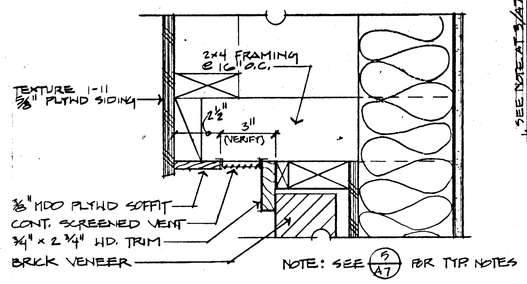


**DETAIL** (4)
SCALE: 3"=1'-0"

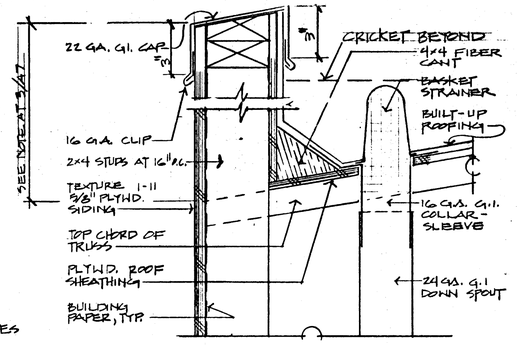


**CAP-GUTTER** (1)
SCALE: 3"=1'-0"

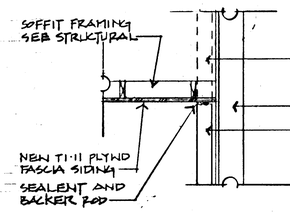


**SECTION** (PLAN VIEW) (15)
SCALE: 3/4"=1'-0"

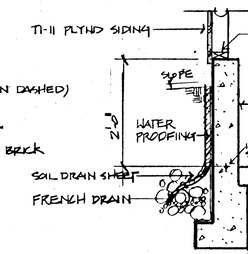


**SECTION** (10)
SCALE: 3/4"=1'-0"




**SECTION** (7)
SCALE: 3/4"=1'-0"

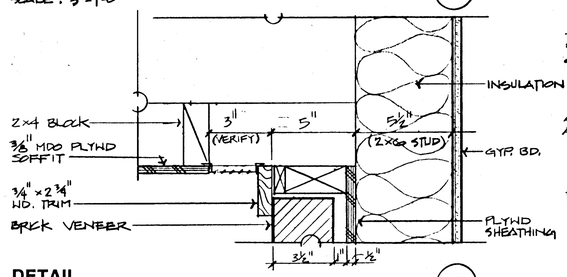


**DETAIL** (5)
SCALE: 3"=1'-0"

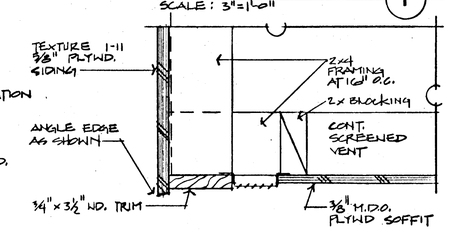


**FASCIA-SOFFIT** (2)
SCALE: 3"=1'-0"

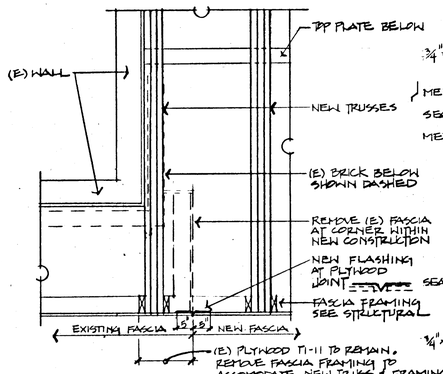


**SECTION** (PLAN VIEW) (16)
SCALE: 3/4"=1'-0"

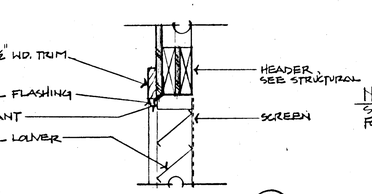


(11)

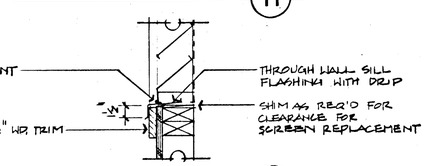


**SECTION** (12)

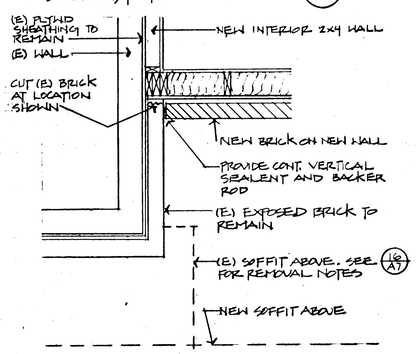


**SECTION** (PLAN VIEW) (17)
SCALE: 3/4"=1'-0"

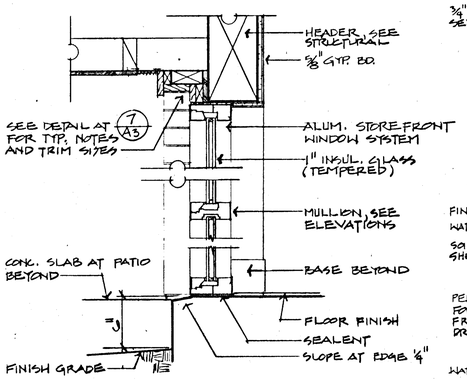


**SECTION DETAIL** (13)
SCALE: 1 1/2"=1'-0"

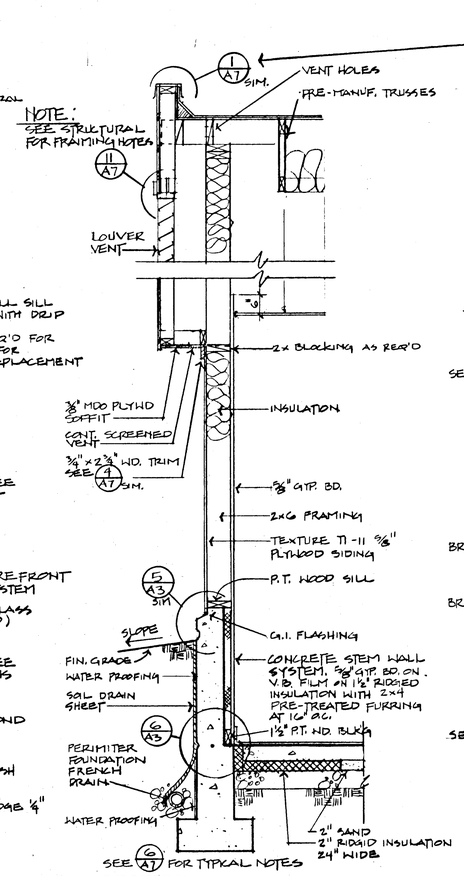


**SECTION** (8)
SCALE: 3/4"=1'-0"

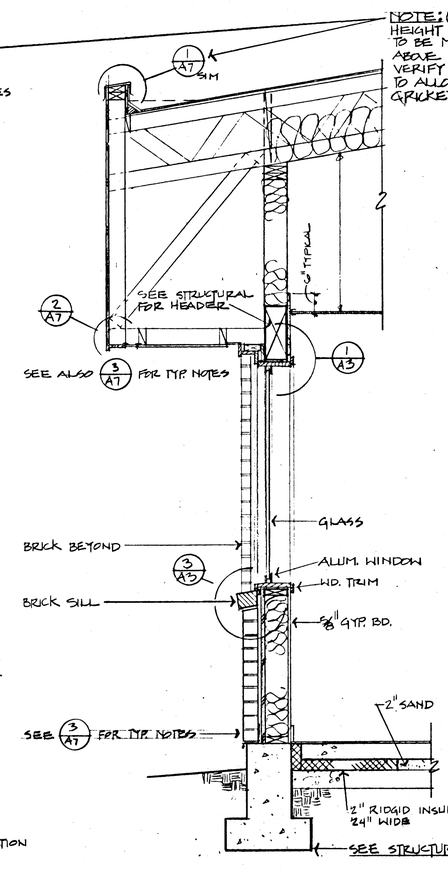


**SECTION** (6)
SCALE: 3/4"=1'-0"

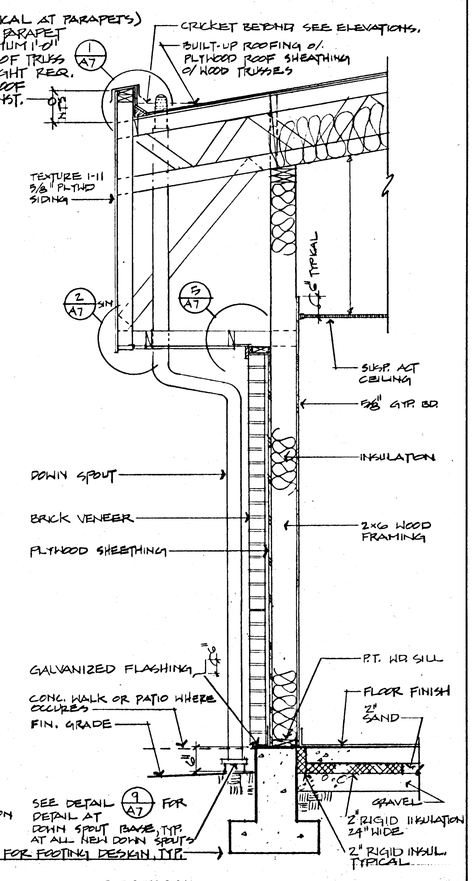


**SECTION** (3)
SCALE: 3/4"=1'-0"


the Cochran Associates
#2 Holly Hill Drive
Mercer Island, WA 98040
206/232-0272


Revisions:

Project Title:

Additions and Alterations to:
HEADQUARTERS FIRE STATION
CITY OF BOTHELL

CITY OF BOTHELL
DEPT. OF COM. DEV.
BUILDING DIVISION
APPROVED

Scale:
Project No.:
Date:
Sheet Number:

A7

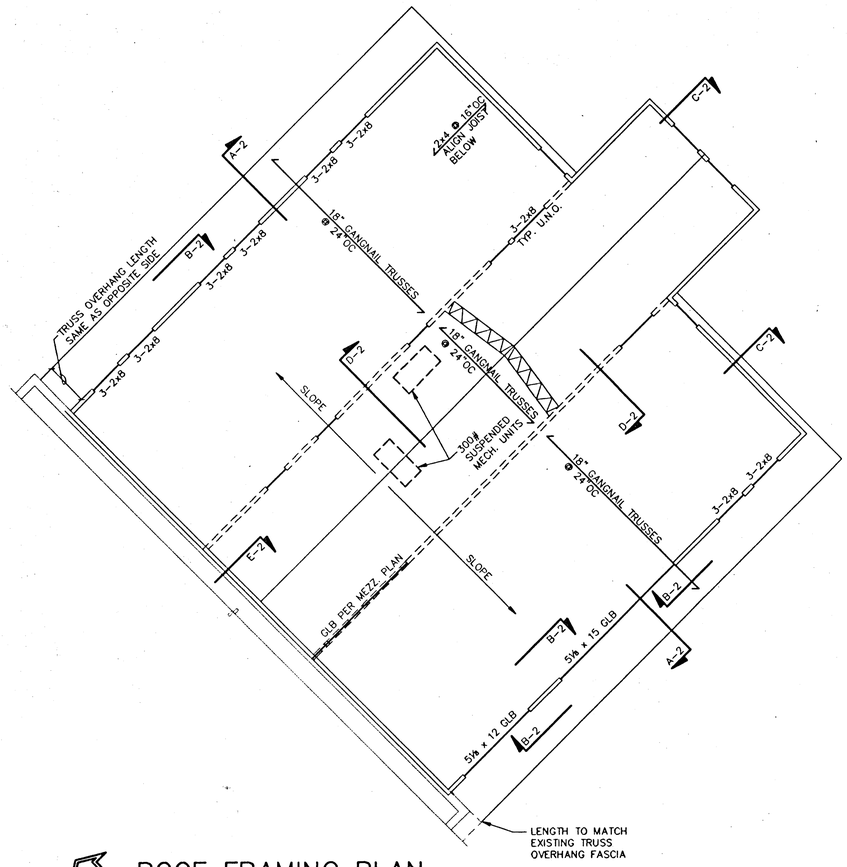


## ROOF FRAMING PLAN

SCALE: ⅛" = 1'-0"

NOTES:
1) ELEVATIONS SHOWN THUS: [ ] ARE TO TOP OF TRUSS BEARING ABOVE TOP OF SLAB. FIELD VERIFY ELEVATIONS MATCH EXISTING.
2) ROOF SHEATHING ⅝" CDX PLYWOOD NAIL W/10d @ 6"OC EDGES, 12"OC FIELD.
3) GAP SHEATHING ⅛" OR PER MANUFACTURE.
4) CHAMBER GLB'S 2000 FOOT RADIUS.

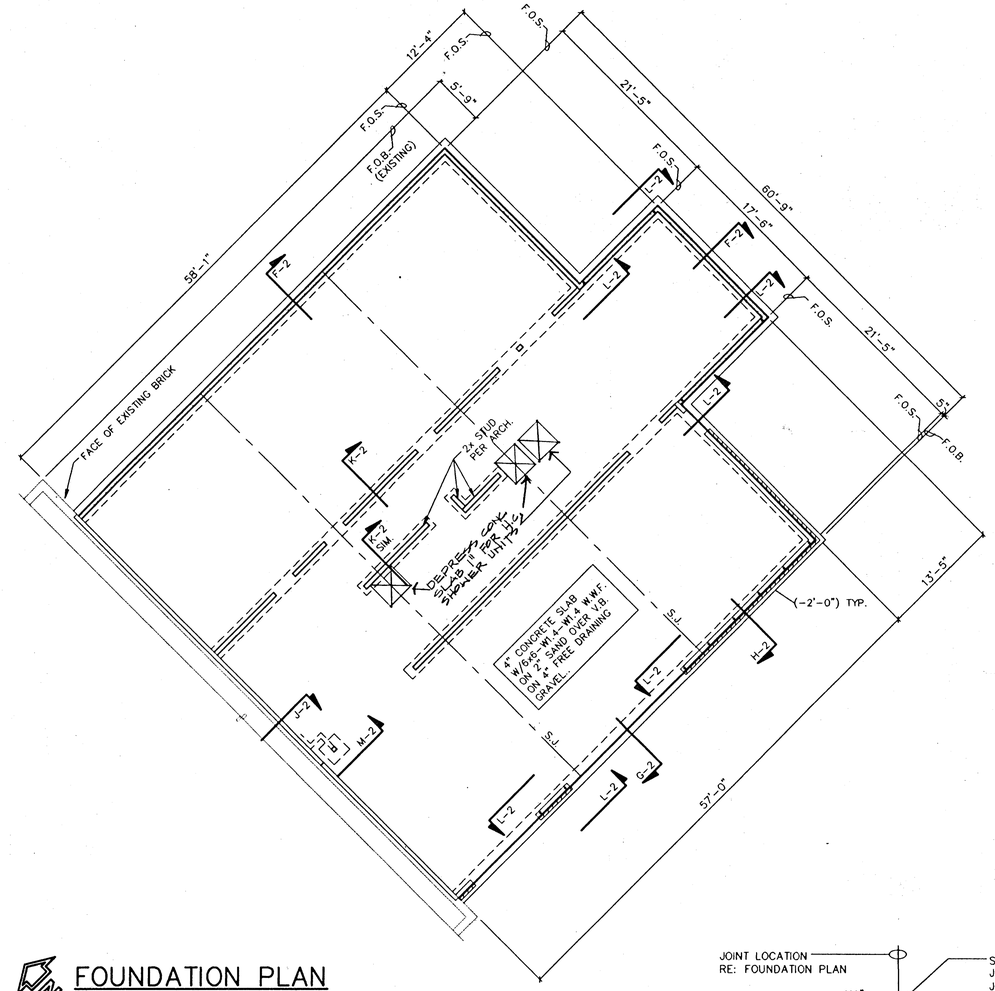


## FOUNDATION PLAN

SCALE: ⅛" = 1'-0"

NOTES:
1) ELEVATIONS TO BOTTOM OF FOOTING INDICATED THUS: ( ).
2) F.O.S. = FACE OF STUD
F.O.B. = FACE OF BRICK

## SHRINKAGE JOINT (S.J.)

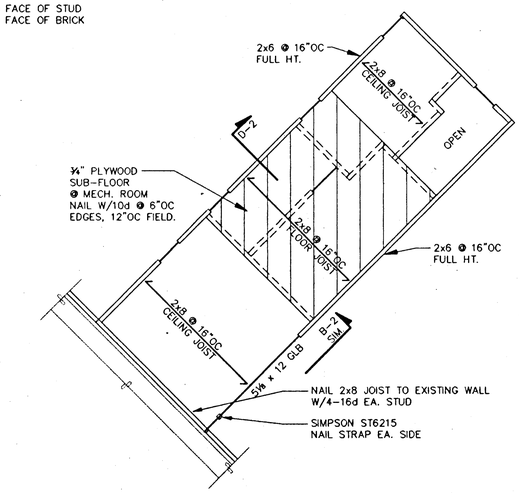


## CEILING & MECH. FLOOR FRAMING PLAN

SCALE: ⅛" = 1'-0"

CITY OF BOTHELL
DEPT. OF COM. DEV.
BUILDING DIVISION
APPROVED


the Cochran Associates
#2 Holly Hill Drive
Mercer Island, WA. 98040
206/232-0272


Revisions:


TEL. (206) 324-6160
FAX (206) 324-6248
RICHARD HUDSON & ASSOCIATES, INC.
CONSULTING ENGINEERS
1605 12TH AVENUE, SUITE 18
SEATTLE, WASHINGTON 98122


Project Title:
ADDITION ALTERATIONS TO HEADQUARTERS FIRESTATION
CITY, BOTHELL

Sheet Title:
FOUNDATION PLAN & ROOF FRAMING PLAN

Scale: AS NOTED
Project No.: 9445
Date: 12-14-94
Sheet Number:
S-1
OF 2

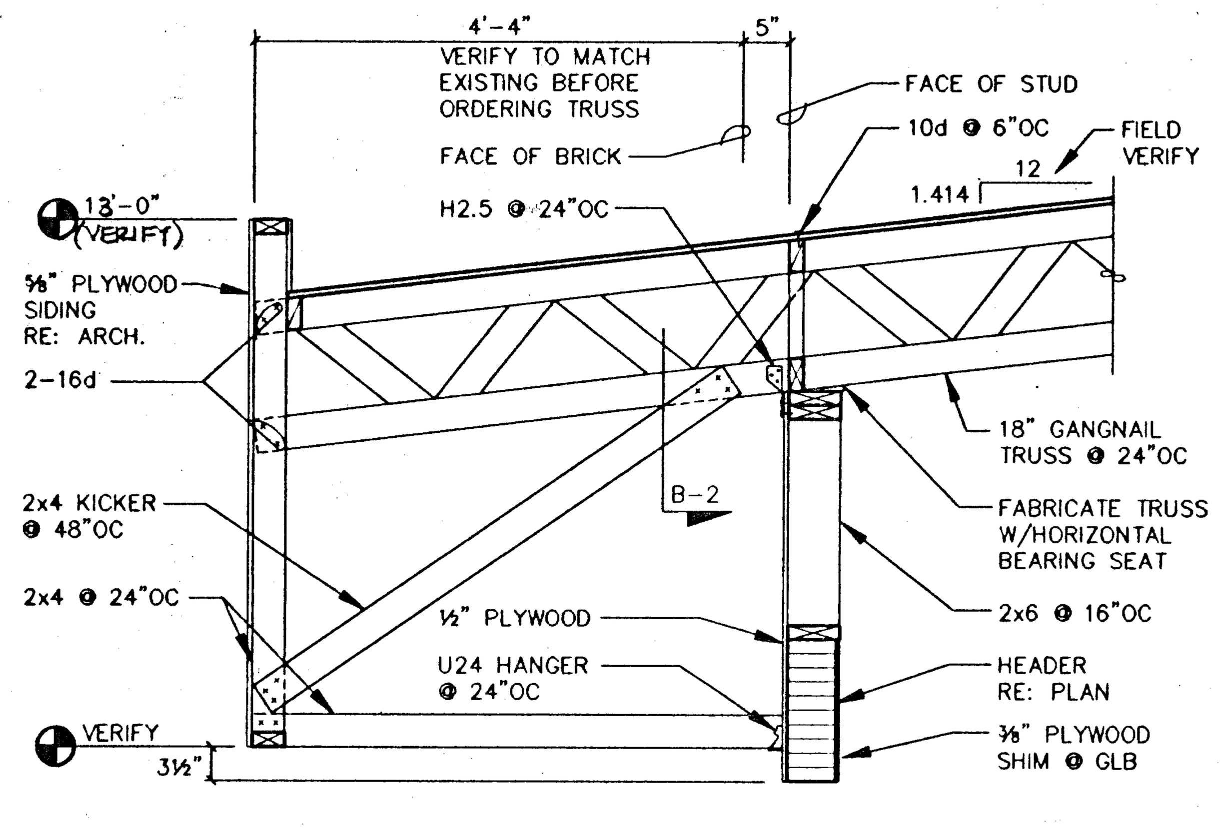


## SECTION A-2
SCALE: ¾"=1'-0"

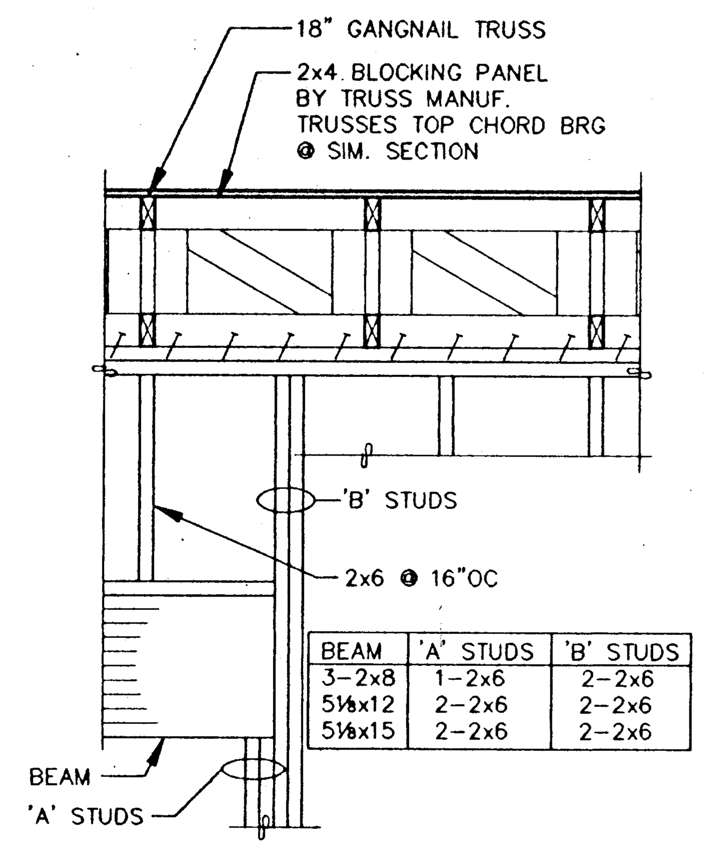


| BEAM | 'A' STUDS | 'B' STUDS |
|---|---|---|
| 3-2x8 | 1-2x6 | 2-2x6 |
| 5⅛x12 | 2-2x6 | 2-2x6 |
| 5⅛x15 | 2-2x6 | 2-2x6 |

## SECTION B-2
SCALE: ¾"=1'-0"

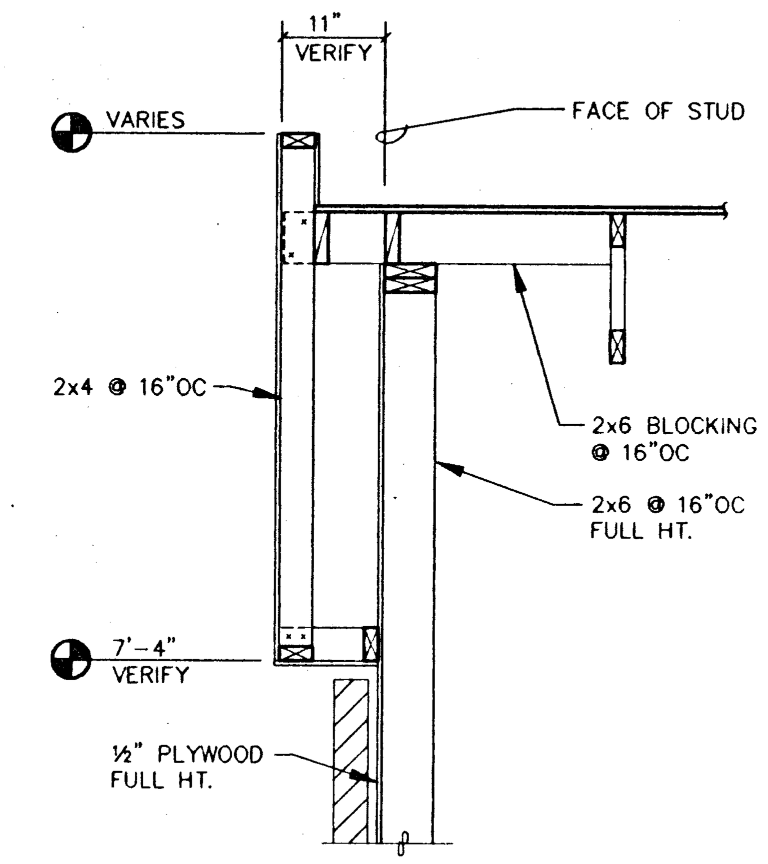


## SECTION C-2
SCALE: ¾"=1'-0"

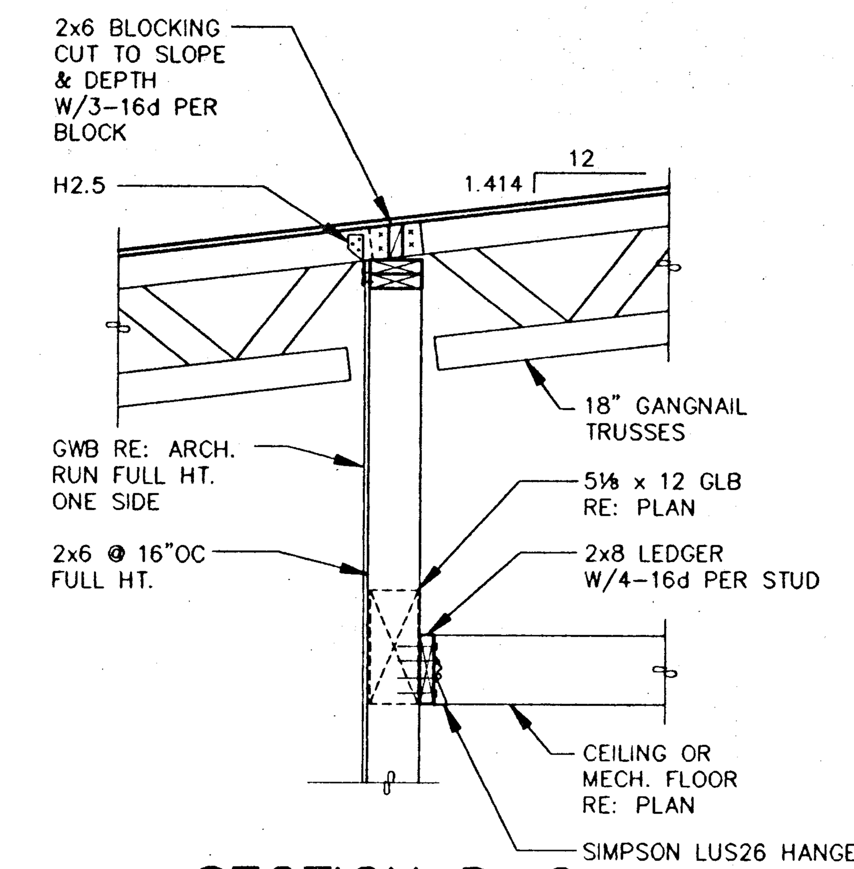


## SECTION D-2
SCALE: ¾"=1'-0"

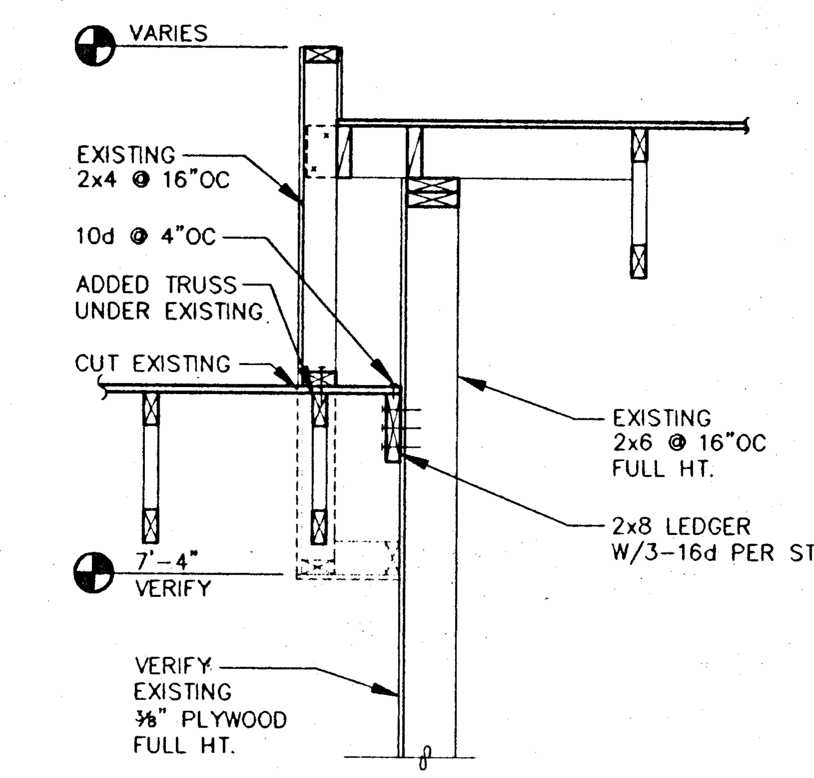


## SECTION E-2
SCALE: ¾"=1'-0"

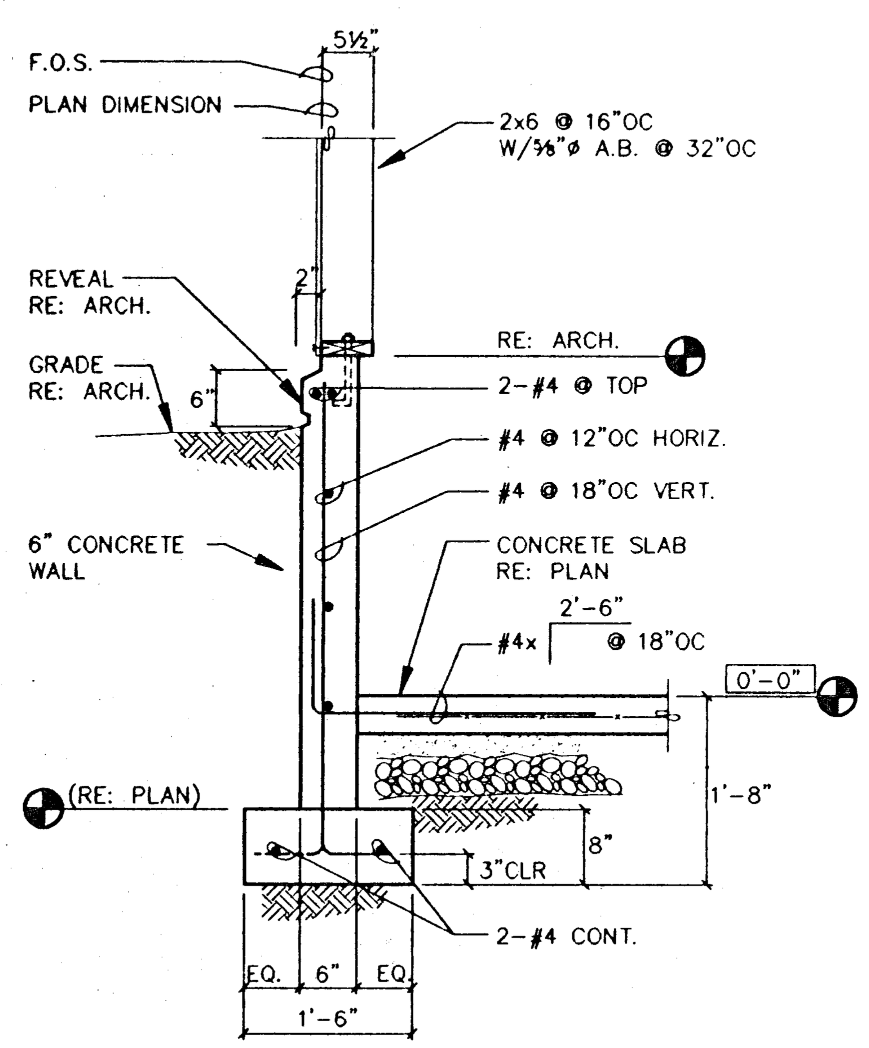


## SECTION F-2
SCALE: ¾"=1'-0"

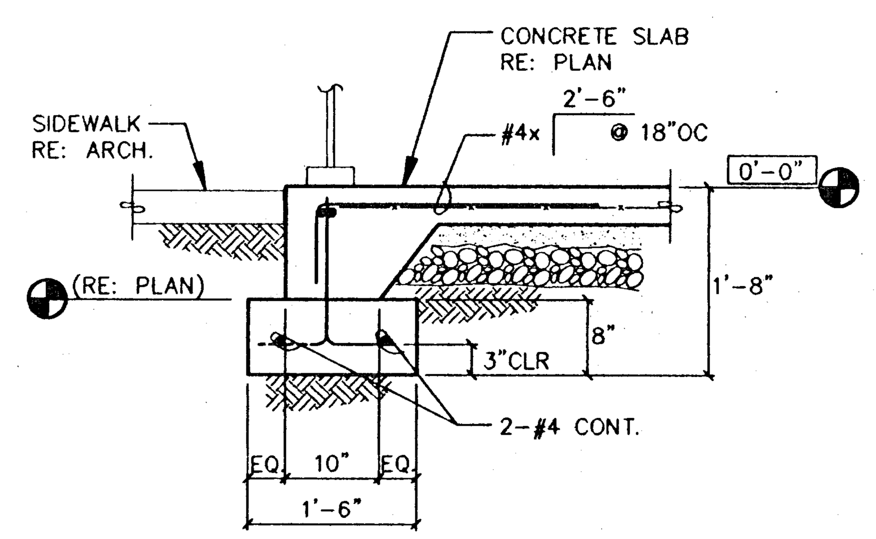


## SECTION G-2
SCALE: ¾"=1'-0"

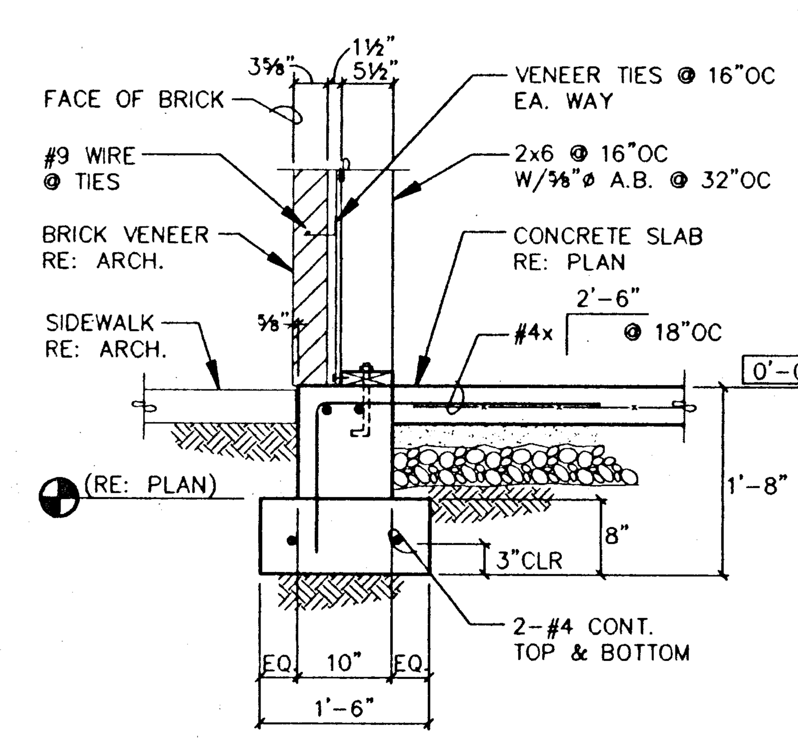


## SECTION H-2
SCALE: ¾"=1'-0"

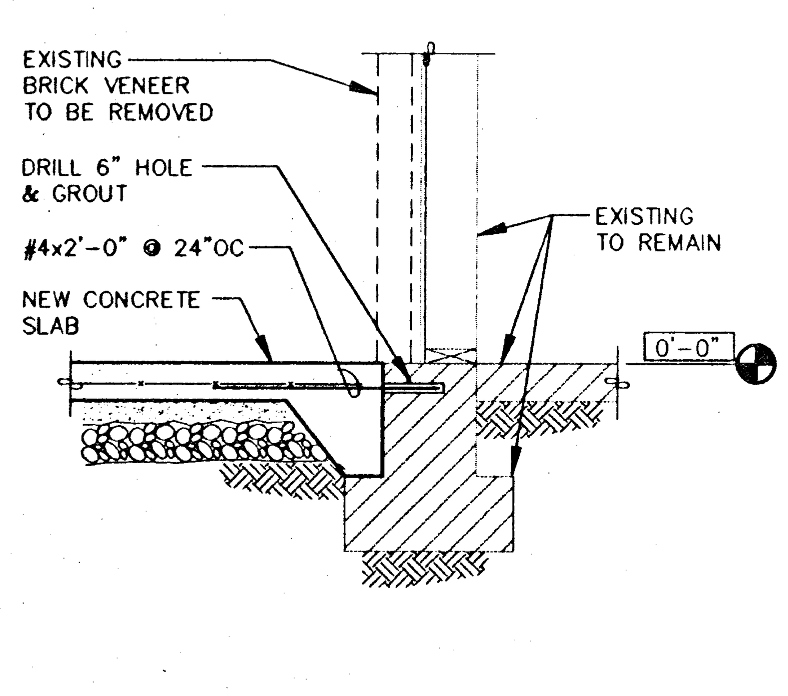


## SECTION J-2
SCALE: ¾"=1'-0"

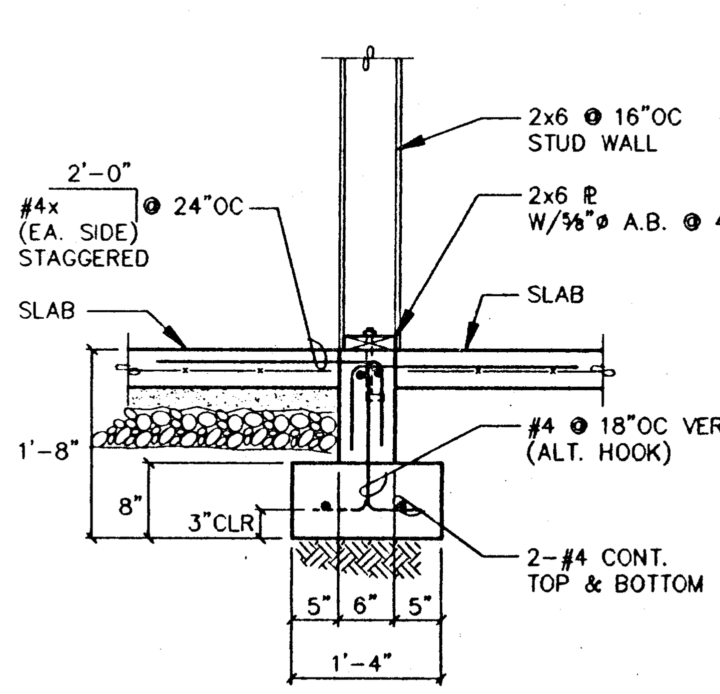


## SECTION K-2
SCALE: ¾"=1'-0"

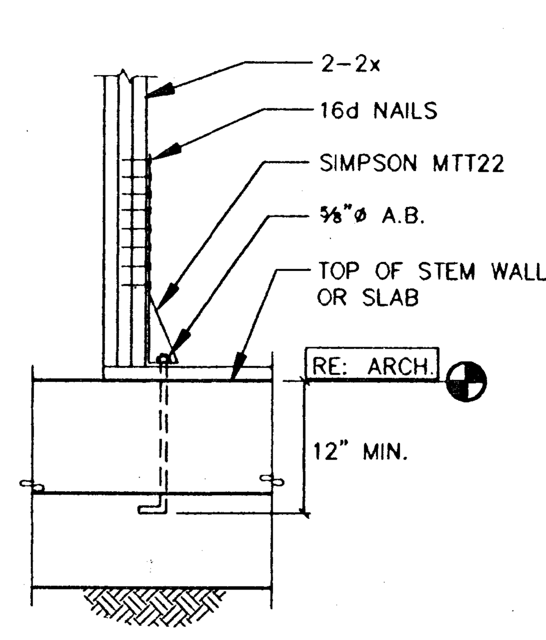


## SECTION L-2
SCALE: ¾" = 1'-0"

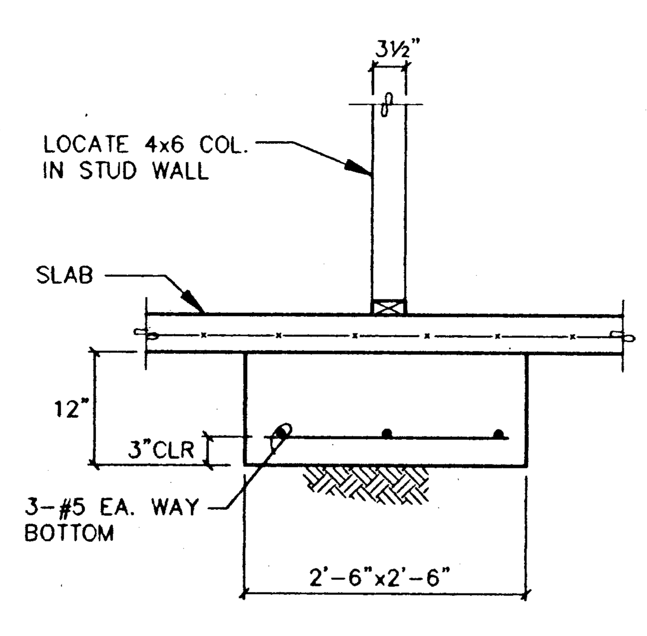


## SECTION M-2
SCALE: ¾"=1'-0"

## GENERAL NOTE

1.ALL MATERIALS, WORKMANSHIP, DESIGN AND CONSTRUCTION SHALL CONFORM TO THE DRAWINGS, SPECIFICATIONS, AND THE APPLICABLE UNIFORM BUILDING CODE (1991 EDITION).

2. STRUCTURAL DRAWINGS SHALL BE USED IN CONJUNCTION WITH ARCHITECTURAL DRAWINGS FOR THE BIDDING AND CONSTRUCTION. CONTRACTOR SHALL VERIFY DIMENSIONS AND CONDITIONS FOR COMPATIBILITY AND SHALL NOTIFY ARCHITECT OF ANY DISCREPANCIES PRIOR TO CONSTRUCTION.

3. CONTRACTOR SHALL PROVIDE TEMPORARY SHORING AND BRACING FOR THE STRUCTURE AND STRUCTURAL COMPONENTS UNTIL ALL FINAL CONNECTIONS HAVE BEEN COMPLETED IN ACCORDANCE WITH THE PLANS.

4. CONTRACTOR SHALL BE RESPONSIBLE FOR ALL REQUIRED SAFETY PRECAUTIONS AND THE METHODS, TECHNIQUES, SEQUENCES OR PROCEDURES REQUIRED TO PERFORM HIS WORK.

5. CONTRACTOR-INITIATED CHANGES SHALL BE SUBMITTED IN WRITING TO THE ARCHITECT AND STRUCTURAL ENGINEER FOR APPROVAL PRIOR TO FABRICATION OR CONSTRUCTION. CHANGES SHOWN ON SHOP DRAWINGS ONLY WILL NOT SATISFY THIS REQUIREMENT.

6. DRAWINGS INDICATE GENERAL AND TYPICAL DETAILS OF CONSTRUCTION. WHERE CONDITIONS ARE NOT SPECIFICALLY INDICATED BUT ARE OF SIMILAR CHARACTER TO DETAILS SHOWN, SIMILAR DETAILS OF CONSTRUCTION SHALL BE USED, SUBJECT TO REVIEW AND APPROVAL BY THE ARCHITECT AND THE STRUCTURAL ENGINEER.

7. ALL STRUCTURAL SYSTEMS WHICH ARE TO BE COMPOSED OF COMPONENTS TO BE FIELD ERECTED SHALL BE SUPERVISED BY THE SUPPLIER DURING MANUFACTURING, DELIVERY, HANDLING, STORAGE AND ERECTION IN ACCORDANCE WITH INSTRUCTIONS PREPARED BY THE SUPPLIER.

8. SHOP DRAWINGS FOR REINFORCING STEEL, STRUCTURAL STEEL, GLUED LAMINATED MEMBERS, AND CONNECTOR PLATE WOOD ROOF TRUSSES SHALL BE SUBMITTED TO THE ARCHITECT AND STRUCTURAL ENGINEER FOR REVIEW PRIOR TO FABRICATION OF THESE ITEMS.

9.ENGINEER OF RECORD SHALL REVIEW SHOP DRAWINGS FOR DESIGN INTENT ONLY. DIMENSIONS AND QUANTITIES ARE NOT GUARANTEED BY THE ENGINEER OF RECORD, THEREFORE, MUST BE VERIFIED BY THE GENERAL CONTRACTOR. DRAWINGS FOR COMPONENTS DESIGNED PRIMARILY BY OTHERS SHALL BE APPROVED BY THE COMPONENT DESIGNER PRIOR TO CURSORY REVIEW BY THE ENGINEER OF RECORD FOR LOADS IMPOSED ON THE BASIC STRUCTURE. THE COMPONENT DESIGNER IS RESPONSIBLE FOR CODE CONFORMANCE. SHOP DRAWINGS MUST BE REVIEWED AND STAMPED BY CONTRACTOR PRIOR TO REVIEW BY ENGINEER.

**CODE:** UNIFORM BUILDING CODE, 1991

**LIVE LOADS:**
ROOF....25 PSF — WIND...80 MPH, EXPOSURE B
MEZZANINE....75 PSF — SEISMIC ZONE 3

**FOUNDATIONS:**
FOUNDATION DESIGN PER REPORT #E6610 BY EARTH CONSULTANTS INC BY GEOTECH CONSULTANTS, INC. SOIL BEARING 2000 PSF PER REPORT. ALL SITE PREPARATION AND FOUNDATION CONSTRUCTION PER THIS REPORT. REPRESENTATIVE FROM EARTH CONSULTANTS, INC. TO INSPECT ALL FOOTING EXCAVATIONS PRIOR TO POURING CONCRETE. FILLS TO BE COMPACTED TO 95% MODIFIED PROCTOR PER ASTM D-1557. ALL EXTERIOR FOOTINGS SHALL BE 24 INCHES MINIMUM BELOW LOWEST ADJACENT GRADE.

**CONCRETE:**
f'c = 2500 psi FOR FOOTINGS
f'c = 3000 psi FOR SLABS ON GRADE
f'c = 3000 psi FOR WALLS
MAX. SLUMP = 3" PLUS OR MINUS 1"
MINIMUM 5 SACKS CEMENT PER CU. YARD

MIXING AND PLACING OF ALL CONCRETE SHALL BE IN ACCORDANCE WITH THE UBC AND ACI CODE 318, LATEST EDITION. PROPORTIONS OF AGGREGATE TO CEMENT SHALL BE AS SUCH TO PRODUCE A DENSE, WORKABLE MIX WHICH CAN BE PLACED WITHOUT SEGREGATION OR EXCESS FREE SURFACE WATER. 3/4" CHAMFER ON ALL EXPOSED CONCRETE EDGES UNLESS INDICATED OTHERWISE ON ARCHITECTURAL DRAWINGS.

**REINFORCING STEEL:**
ALL REINFORCEMENT SHALL CONFORM TO ASTM A615 EXCEPT AS NOTED FOR WELDED REBAR. SLAB DOWELS SHALL BE GRADE 40 (fy =40,000 psi). OTHER REINFORCING SHALL BE GRADE 60 (fy=60,000 psi). LAP CONTINUOUS REINFORCING BARS 36 BAR DIAMETER IN CONCRETE MINIMUM UNLESS NOTED OTHERWISE. CORNER BARS WILL BE PROVIDED FOR ALL HORIZONTAL REINFORCEMENT. DETAIL STEEL IN ACCORDANCE WITH THE ACI DETAILING MANUAL. WIRE MESH SHALL CONFORM TO ASTM A-82 OR A-185.

**COVER TO REINFORCEMENT TO BE:**
FOOTINGS............................3 INCHES
FORMED SURFACES--WEATHER FACE.......1 1/2 INCHES
INTERIOR FACE.......3/4 INCHES
EARTH FACE........2 INCHES

**STRUCTURAL STEEL:**
TUBE COLUMNS SHALL CONFORM TO ASTM A500, GRADE B (fy = 46,000 psi). ROLLED STEEL SHAPES SHALL CONFORM TO ASTM A-36 (fy = 36, 000 psi). WELDS NOT SPECIFIED SHALL BE 3/16" CONTINUOUS FILLET MINIMUM. ALL WELDS TO BE BY W.A.B.O. CERTIFIED WELDERS. USE FRESH E70 ELECTRODES. SUBMIT SHOP DRAWINGS TO ARCHITECT AND STRUCTURAL ENGINEER FOR REVIEW PRIOR TO FABRICATION OF STRUCTURAL STEEL. MACHINE BOLTS TO BE A-307. FABRICATION AND ERECTION SHALL BE IN ACCORDANCE WITH AISC FABRICATION AND ERECTION SPECIFICATION AND CODE OF STANDARD, CURRENT EDITION. WELDED HEADED STUDS SHALL CONFORM TO AWS D1.1.

**FRAMING LUMBER:**
2 X 4 STUDS...................H.F. STND
2 X 4 JOISTS..................H.F. #2.............fb = 1150 psi
2 X 6 STUDS AND ROOF JOISTS...H.F. #2.............fb = 1000 psi
LUMBER NOT NOTED TO BE D.F. #2 OR BETTER.
ALL GRADES SHALL CONFORM TO WWPA GRADE RULES FOR WESTERN LUMBER---MOST RECENT EDITION. ALL BOLTS HEADS AND NUTS BEARING AGAINST WOOD SHALL BE PROVIDED WITH STANDARD CUT WASHERS. ALL WOOD IN CONTACT WITH CONCRETE OR MASONRY SHALL BE PRESSURE TREATED. MAXIMUM MOISTURE CONTENT 19% AT INSTALLATION FOR ALL LUMBER. STEEL HANGERS TO BE SIMPSON OR APPROVED EQUAL. FASTEN ALL HANGERS AS SPECIFIED BY MANUFACTURER UNLESS SHOWN.

**GLU LAMINATED WOOD MEMBERS:**
GLU-LAMINATED WOOD BEAMS. KILN DRIED, INDUSTRIAL APPEARANCE OR PRESSURE TREATED ARCHITECTURAL PER ARCHITECT. STRESS GRADE COMBINATION 24-F-V4 (fb =2400 psi; fv=165 psi) AT SIMPLE SPAN BEAMS. STRESS GRADE COMBINATION 24F-V8 AT CANTILEVERED BEAMS (fb=2400 psi, fv = 165 psi). GLU-LAMS MUST BE OBTAINED FROM AN AITC OR APA-EWS APPROVED FABRICATOR. SUBMIT SHOP DRAWINGS TO ARCHITECT AND STRUCTURAL ENGINEER PRIOR TO FABRICATION.

**PLYWOOD AND OSB:**
WALL SHEATHING.........1/2 CD W/ EXTERIOR GLUE
ROOF SHEATHING.........5/8 CD W/ EXTERIOR GLUE...INDEX 40/20

FLOOR SHEATHING........3/4" T & G UNDERLAYMENT GRADE W/ EXTERIOR GLUE...INDEX 48/24
GAP EDGES 1/8 INCH MINIMUM OR AS RECOMMENDED BY APA.
ALL PLYWOOD SHALL CONFORM TO U.S. PRODUCT STANDARD P.S. 1, CURRENT EDITION. NAILING SHALL BE AS INDICATED ON PLAN. CONTRACTOR IS TO CALL THE ENGINEER FOR OBSERVATION OF ROOF AND FLOOR DIAPHRAGMS PRIOR TO COVERING.

**WOOD TRUSSES:**
TRUSSES ARE TO BE METAL PLATE CONNECTED WOOD TRUSSES, FABRICATED IN ACCORDANCE WITH UBC STANDARD NO. 25-17, PART V.

TRUSS FABRICATOR TO PROVIDE ALL REQUIRED BRIDGING AND BLOCKING, BOTH PERMANENT AND ERECTION. SHOP DRAWINGS, STAMPED BY A LICENSED WASHINGTON ENGINEER, ARE TO BE SUBMITTED TO THE ARCHITECT PRIOR TO FABRICATION. DESIGN CRITERIA SHALL MEET OR EXCEED THE FOLLOWING:
ROOF TRUSSES: TOP CHORD - 25 PSF LL, 10PSF DL
BOTTOM CHORD - 10 PSF DL
DEFLECTION LIMIT - TL L/240, LL L/360

**TRUSS SUPPLIERS NOTE:**
THE TRUSS CONFIGURATIONS, INCLUDING DEPTHS AND MEMBER SIZES, SHOWN ON THE DRAWINGS INDICATE THE DESIRED TRUSS CONFIGURATIONS AND ARE TO BE COMPLIED WITH WHEREVER POSSIBLE. IF A TRUSS MANUFACTURER IS UNABLE TO MEET THE LOAD REQUIREMENTS SPECIFIED WITH THE TRUSS CONFIGURATION INDICATED, HE IS TO SUBMIT WRITTEN NOTICE TO THAT EFFECT TO THE ARCHITECT. IT IS THE RESPONSIBILITY OF THE GENERAL CONTRACTOR AND TRUSS MANUFACTURER TO VERIFY THE WEIGHT AND LOCATIONS OF ALL MECHANICAL EQUIPMENT PRIOR TO SUBMITTING SHOP DRAWINGS TO THE ARCHITECT AND STRUCTURAL ENGINEER FOR REVIEW.

**SPECIAL CONDITIONS:**
CONTRACTOR TO COORDINATE ALL TRADES AND VERIFY DIMENSIONS IN FIELD. OBTAIN ARCHITECT'S APPROVAL PRIOR TO ALL FIELD CHANGES. SEE ARCHITECTURAL DRAWINGS FOR ALL FLOOR AND WALL OPENING DIMENSIONS AND LOCATIONS, FLOOR AND WALL FINISHES, ETC.

CITY OF BOTHELL
DEPT. OF COM. DEV.
BUILDING DIVISION
APPROVED


the Cochran Associates
#2 Holly Hill Drive
Mercer Island, WA. 98040
206/232-0272


Revisions:


TEL. (206) 324-6160
FAX (206) 324-6248
RICHARD HUDSON & ASSOCIATES, INC.
CONSULTING ENGINEERS
1605 12TH AVENUE, SUITE 18
SEATTLE, WASHINGTON 98122


RICHARD B. HUDSON — PROFESSIONAL ENGINEER
EXPIRES 5/13/95

Project Title:
ADDITION ALTERATIONS TO HEADQUARTERS FIRESTATION
CITY, BOTHELL

Sheet Title:
SECTIONS

| | |
|---|---|
| Scale: | AS NOTED |
| Project No.: | 9445 |
| Date: | 12-14-94 |

Sheet Number:
S-2
OF 2

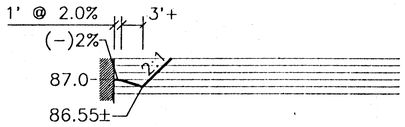


SECTION B–B

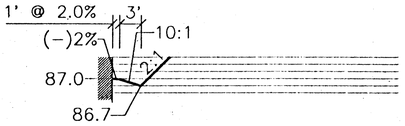


SECTION C–C

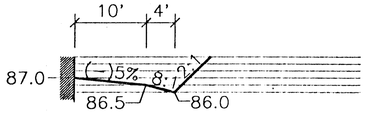


SECTION D–D

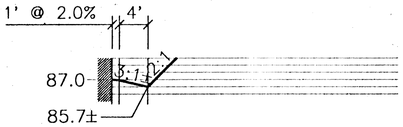


SECTION E–E

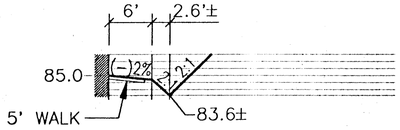


SECTION F–F

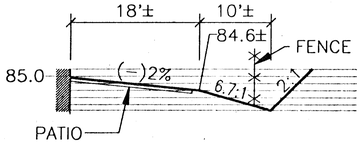


SECTION G–G

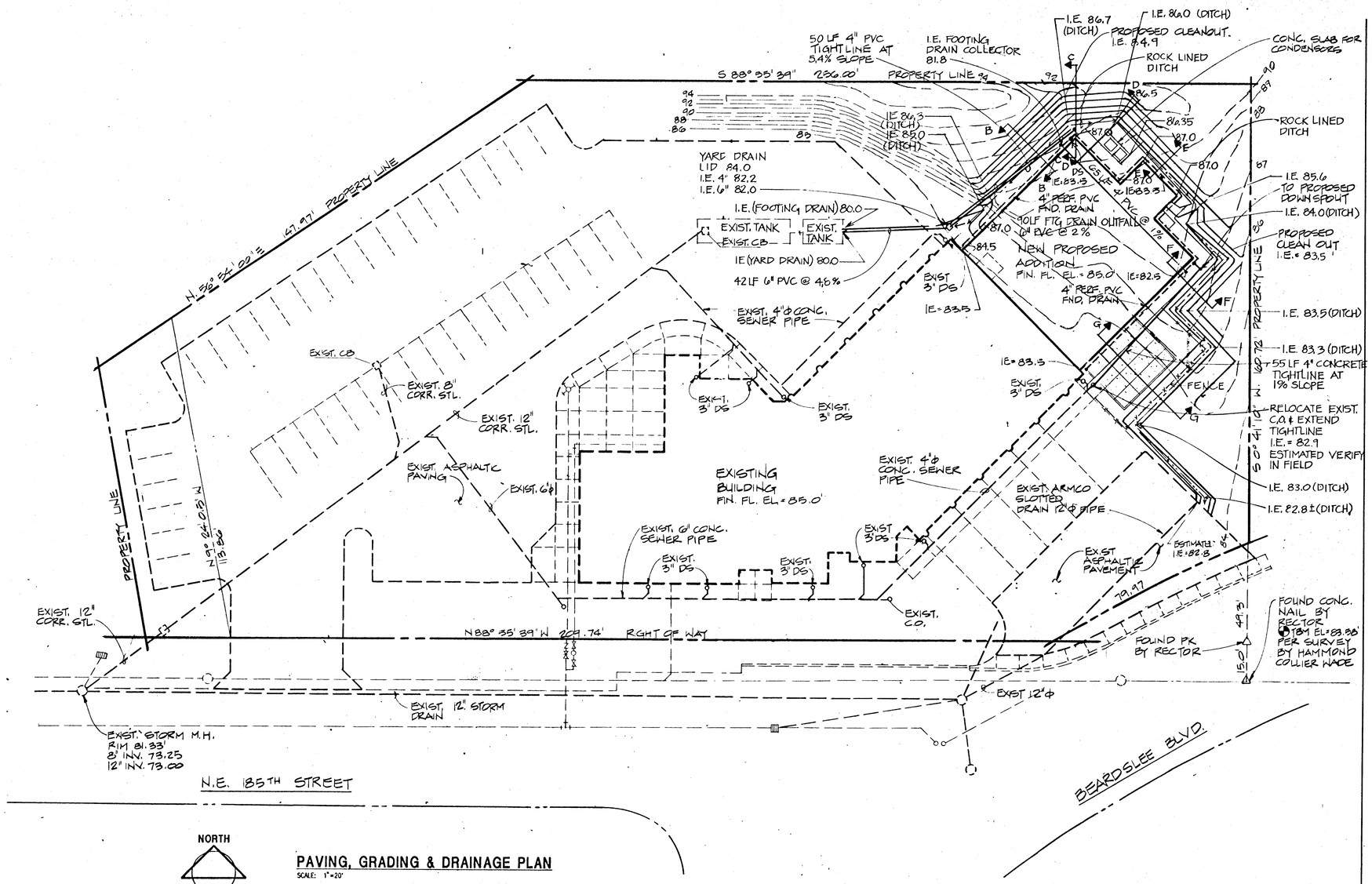


PAVING, GRADING & DRAINAGE PLAN

SCALE: 1" = 20'

LEGEND:

- EXISTING CATCH BASIN
- EXISTING MANHOLE
- PROPERTY LINE
- 85 EXISTING CONTOURS
- 85 PROPOSED CONTOURS
- PROPOSED SIDEWALK

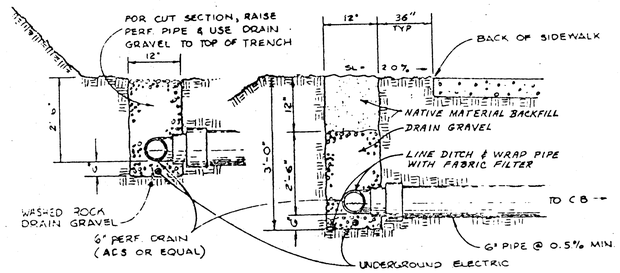


LOT DRAIN TRENCH DETAIL

NO SCALE

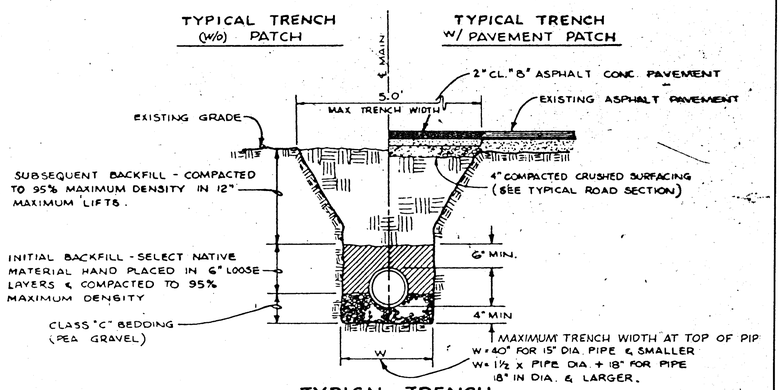


TYPICAL TRENCH

NO SCALE


the Cochran Associates

#2 Holly Hill Drive
Mercer Island, WA 98040
206/232-0272


Revisions:


AKB CONSULTING ENGINEERS
876-140th Avenue N.E. • Suite 201
BELLEVUE • WASHINGTON • 98005
(206) 747-3592 • FAX (206) 747-5481


Project Title:

ALTERATION & ADDITION TO BOTHELL HEADQUARTERS FIRE STATION

Sheet Title:

PAVING, GRADING AND DRAINAGE PLAN

Scale: 1" = 20'

Project No.: 94097

Date:

Sheet Number:

C-1

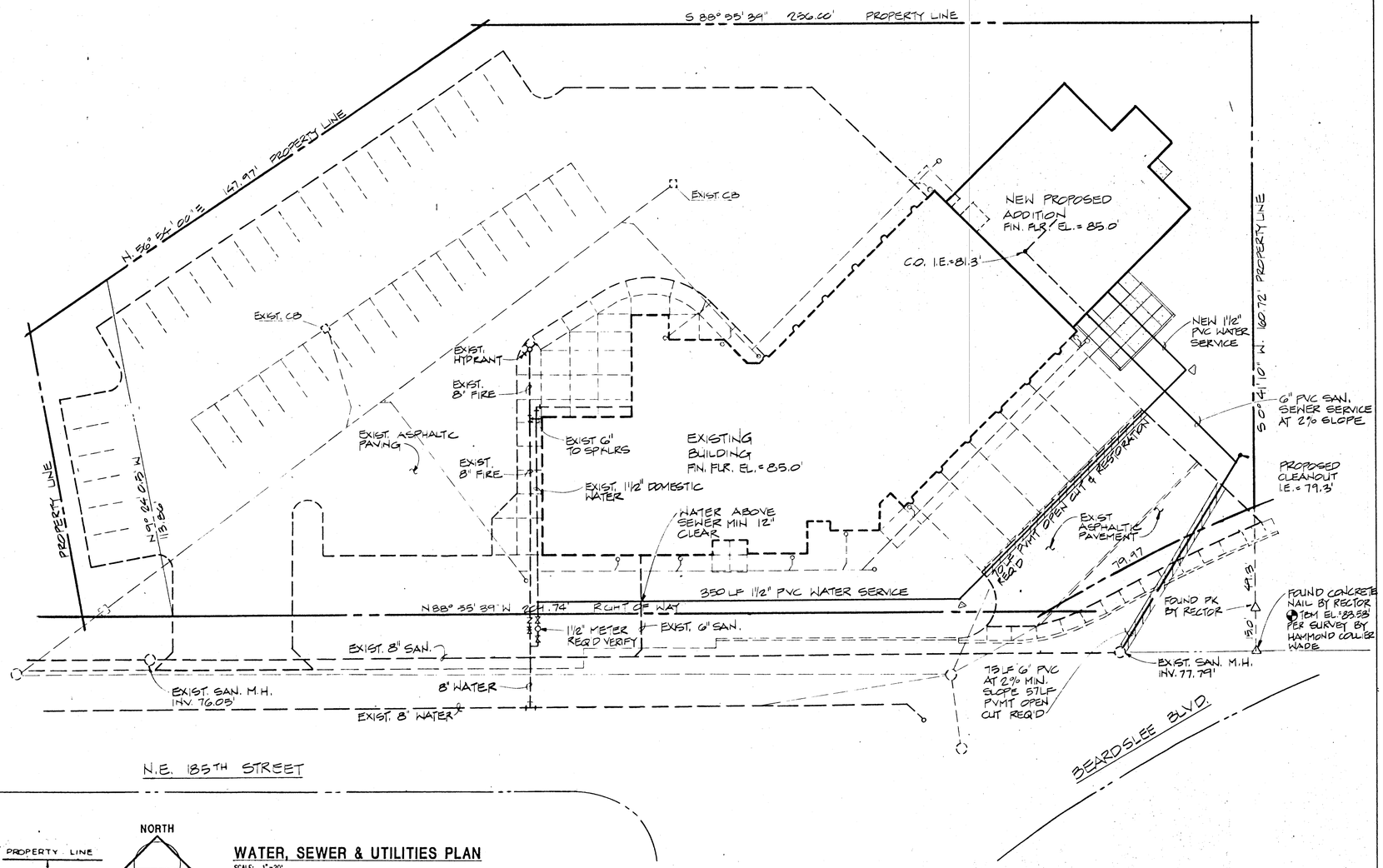


NORTH

## WATER, SEWER & UTILITIES PLAN

SCALE: 1" = 20'

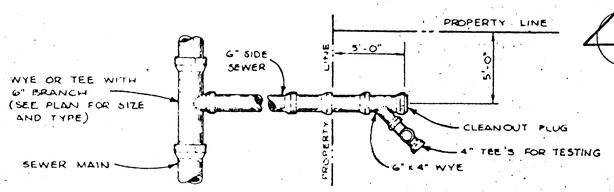


## TYPICAL SINGLE SERVICE

NO SCALE

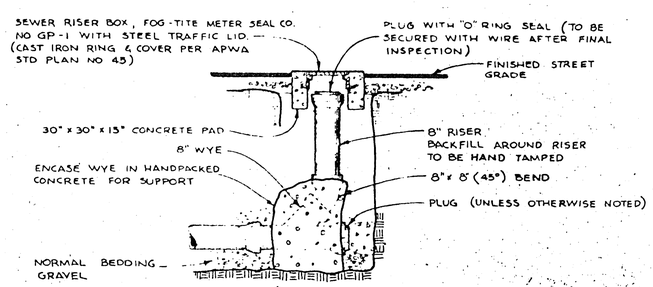


## CLEANOUT DETAIL

(SEWER MAIN ONLY)
NO SCALE

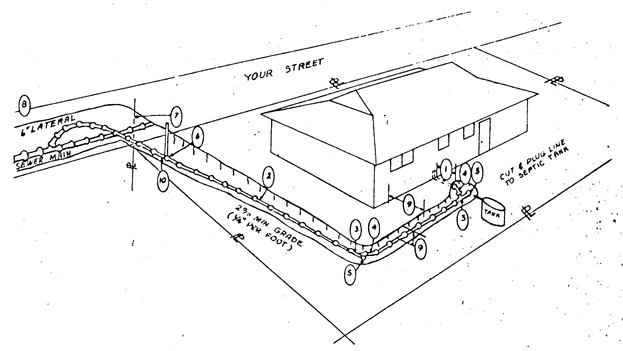


## TYPICAL SIDE SEWER CONNECTION

7/83

### GENERAL NOTES

1. Legal description and address required to obtain permit.
2. No downspouts or outside drains are allowed to connect to side sewer.
3. All side sewers shall be installed by a licensed and bonded Contractor. A City of of Bothell business license is also required.
4. Not over 100 feet between cleanouts. Cleanouts required for bends greater than 45°. Cleanout shall be a plugged wye lateral.
5. Pipe shall be bedded with pea gravel or sand unless otherwise directed by City Engineer.
6. All joints shall be rubber gasket type, EXCEPT ABS & PVC Schedule 40 shall be solvent welded type.
7. Parallel water and sewer lines shall be 10 feet apart horizontally wherever possible.
8. Side sewer shall be inspected by the City prior to backfilling. Side sewer shall be plugged and tested in presence of City Inspector by filling with water. A 6-foot head is required. Leakage rate shall not exceed .31 gal/hr for 4" pipe and .47 gal/hr for 6" pipe per 100 feet of pipe.

1. Connect side sewer connection with approved adapter.
2. Side sewer pipe shall be 4" or larger and can be constructed with pipe (ASTM D-3304) or equivalents.
3. Wye
4. 45° (1/8th) bend.
5. Plug to fit manufacturer's pipe.
6. 6" by 4" reducer where required.
7. Minimum depth at ℄ 5'
8. 6" lateral service from the mainline to property line by a licensed and bonded sewer contractor.
9. On private property, minimum cover shall be 24" over top of pipe and minimum 30" out from house.
10. Inspection tee typical where lateral service is provided to property line by Contractor.

the Cochran Associates
#2 Holly Hill Drive
Mercer Island, WA 98040
206/232-0272

Revisions:

ATKB
CONSULTING ENGINEERS
875-140th Avenue N.E. • Suite 201
BELLEVUE • WASHINGTON • 98006
(206) 747-3592 • FAX (206) 747-6481

Project Title:

**ALTERATION & ADDITION TO BOTHELL HEADQUARTERS FIRE STATION**

Sheet Title:

**WATER, SEWER AND UTILITIES PLAN**

Scale: 1" = 20'

Project No.: 84097

Date:

Sheet Number:

**C-2**

## CONSTRUCTION ALONG OR ACROSS CITY

## RIGHT-OF-WAY

1. The city shall exercise full control of all excavating, construction and other invasions of city right-of-way. The Department of Public Works shall be notified at least 24 hours prior to commencing construction.

2. No open-cut crossings of city streets shall be made without a right-of-way invasion permit.

3. All open-cuts of city streets shall be as follows:

   a. Existing surface to be pre-cut two feet wider than top of trench width.

   b. Backfilling and mechanical compaction to 95 percent of maximum density to be accomplished in a maximum of 1-foot lifts immediately after installation.

   c. Backfill material shall be completely granular and free draining. Excavated material may be used for backfilling if approved.

   d. Immediately following compaction, a 4-inch left of compacted 1-1/4" minus crushed rock and 3" of cold mix asphaltic concrete shall be placed.

4. Final restoration of open-cut shall be accomplished prior to final cleanup as follows:

   Remove temporary cold patch. Cut and trim edges of existing road surface to neat line and then tack. Place a three-inch minimum compacted thickness of Class "B" asphaltic concrete. Level to conform to adjacent surfaces.

5. Shoulders disturbed by excavation shall be re-shaped to original condition and surfaced with a minimum 2" compacted thickness of crushed rock to course.

6. All backfill of trenches within the improved roadway shall be compacted by mechanical means to the minimum density of 95 percent. Upon request, the contractor shall, at his expense, furnish as many compaction tests as are necessary for proof of minimum compaction. Compaction by water settling or wheel rolling shall be permitted only with the consent of the Department of Public Works.

7. Backfilling and restoration of trenches authorized within the utility strip on fully improved streets shall be accomplished as follows:

   a. Backfilling shall be in accordance with paragraphs "B" and "C" of Item 3 above.

   b. Topsoil conforming to APWA Section 55 shall be placed on all areas requiring Seeding or Sodding:

      1. Areas to be seeded shall receive 4 inches of topsoil.

      2. Areas to be sodded shall receive 3 inches of topsoil.

8. Existing drainage ditches, culverts, etc., shall be kept clean at all times. Temporary diversion of any drainage system shall not be permitted without prior approval. Any drainage culverts, catch basins, manholes, etc., damaged by excavation shall be repaired or replaced using new materials as directed.

9. If, in the opinion of the Department of Public Works, it appears that the traveled roadway is, or may become, unsafe for the traveling public due to weather or any other reason, excavation shall cease immediately, and cleanup shall be promptly accomplished.

10. The length of open trench on streets shall be a maximum of 250 lineal feet.

11. All pipe strung along city right-of-way shall be placed at a safe distance from traveled roadway in such a manner as to prevent accidental rolling onto roadway.

12. Final cleanup, including complete restoration of shoulders, cleaning of ditches, culverts, and catch basins, and removal of loose material from back-slope of ditches, shall not exceed 1,500 lineal feet behind excavating operations.

13. If the final restoration of open cuts is inadequate to protect the base of the street from erosion caused by intrusion of water, the contractor shall be required to seal coat the full width of the street.

14. Street surface shall be cleaned at the end of each day's operation with a power broom or other approved means.

15. No excess material or unsuitable material shall be wasted on city right-of-way without approval.

16. All materials shall be readily available to the job sit and provisions shall be made to complete the construction in one continuous operation. Failure to comply shall result in excavation being halted until such time as the conditions are corrected.

17. Final inspection and approval:

    a. On-site inspection during construction should be provided by the owner and/or City of Bothell.

    b. The use of constructed utilities shall not be permitted until final inspection and approval of the entire construction site have been made unless special written permission is obtained from the Director of Public Works.

    c. Prior to final approval of construction, a visual inspection of the site will be made by the Department of Public Works. Restoration of the area will be complete.

## SANITARY SEWER CONSTRUCTION

1. **SANITARY SEWER PIPE**

   Shall be ASTM C-14 (Extra Strength), rubber-gasketed concrete pipe or PVC ASTM D 3034, SDR 35 per standard specifications. Tees shall be installed in the main where required for side and/or lateral sewers. The main shall be located 4 ft. S. or W. of road ??.

2. **SIDE SEWER PIPE**

   Shall be ASTM C-14 (Extra Strength), rubber-gasketed concrete pipe or PVC ASTM D 3034, SDR 35.

3. **EXCAVATION AND BACKFILL**

   To be Class "A" unless otherwise noted on the plans. Select trench backfill, if required, shall be Class "B", per APWA Section 61. Trench backfill compacted to 95% of maximum density, per APWA Section 13-3, 10ES, shall be required wherever trench excavation is made in a paved roadway, sidewalk or any other area where minor settlement would be detrimental. For water settling, see notes, Item 2.

4. **SIDE AND/OR LATERAL SEWERS**

   Shall be constructed no less than two (2) pipe lengths past the property line. Than minimum depth at property line is 2'-6". The minimum slope is 2%. Each service requires a tee for testing. The ends shall be marked with no less than a No. 9 wire and secured to a 2" X 4" stake painted yellow. The depth of the side and/or sewer below ground is to be marked on the stake.

5. **MANHOLES**

   Shall be 48" I.D. Type 1A1 APWA Plan No. 34, except that the cones shall be eccentric pattern (48" X 24" X 19"). The manhole rings shall be Olympic No. 5943 or equal having one (1) hole in the lid. The word "SEWER" shall be cast in the cover.

6. **BEDDING**

   Shall be Class "C" bedding unless specified otherwise on the plans. Class "D" bedding will not be permitted. If solid rock is encountered, reference is made to Section 61-3.03C of the Standard Specifications. Bedding for PVC pipe and asbestos cement (A.C.) pipe shall be 4" below and 6" above pipe compacted to 95%.

7. **CLEAN OUTS**

   Clean outs shall be constructed of non-reinforced Class III concrete pipe with ring and cover as per Standard Plan No. 45 of APWA Standard Specifications.

8. **SEWER AND WATER SEPARATION**

   Sewers shall always be lower than the water mains.

   a. In parallel construction there shall be a minimum of 10' horizontal separation measured edge to edge.

   b. In perpendicular construction, a minimum vertical clearance of 36" is required.

   c. Any deviation from the above will have to be approved by the city engineer.

9. **TESTING**

   Shall be done in the presence of and under the supervision of the city engineer and/or his representative. The city of Bothell has established the AIR TEST METHOD as the standard method for testing. The procedure as set forth in Section 62-3, 10A may be used for testing upon special request to the city engineer.

10. All sewer mains that are installed 18 feet below ground shall be ductile iron pipe or cast iron. No PVC pipe will be allowed.

## GENERAL NOTES

1. **STANDARD SPECIFICATIONS**

   All work to be performed and materials to be used shall be in accordance with the "American Public Works Association - A.P.W.A. - Standard Specifications for Municipal Public Works Construction", 1981 Edition, as applicable and as modified below, and unless otherwise noted, shall be subject to inspection and approval by the City of Bothell.

2. **PERMITS**

   Prior to construction and in addition to any other permits required, a City of Bothell "Right-of-Way Invasion Permit" MUST be obtained for any and all work within the city right-of-way.

3. **PLANS**

   It is a requirement of the City of Bothell, Department of Public Works, that an approved set of construction plans for all work be kept on the construction site at all times during the construction period.

4. **INSPECTION**

   The Department of Public Works shall be notified 24 hours prior to starting any type of construction including clearing, sanitary sewers, water mains, storm drains, curb and gutters, sidewalks, driveways, street grading and paving.

5. **TRENCH BACKFILL**

   Where material excavated from the trench is unsuitable for backfill, the contractor shall backfill the trench with Class C bank-run gravel.

6. **EXCESS WATER**

   Should water be encountered during construction, it shall be the contractor's responsibility to de-water before construction continues, in accordance with Section 61-3.02 of the Standard Specifications.

7. **UNSUITABLE MATERIAL**

   Any material which is not suitable for construction purposes shall be removed by the contractor and replaced by Class B bank-run gravel.

## TRAFFIC CONTROL IN THE CITY

## RIGHT-OF-WAY

1. All signs, barricades and related equipment and their use must be in accordance with Part VI, "Traffic Controls for Highway Construction and Maintenance Operations", of the Manual on Uniform Traffic Control Devices as prepared by the National Joint Committee on Uniform Traffic Control Devises.

2. Partial attention should be made to the following items:

   a. There shall be at all times reasonable pedestrian access to and across from the properties adjacent to the project.

   b. During non-working hours, the contractor shall keep the existing traffic lanes clear for traffic without interference from his operations so far as possible.

   c. At locations designated by the engineer, the signs and barricades shall be supplemented by flasher units during the hours of darkness.

   d. The city police and fire departments shall be notified 24 hours prior to barricading or closing of streets. Proper provisions shall be made for the public convenience, safety, and travel.

   e. Any asphalt concrete pavement, crushed surfacing, gravel base or water required for maintaining traffic during the lift of the project shall be placed by the contractor immediately upon request by the engineer.

   f. All unattached excavations shall be properly barricaded so as to prevent accidents.

   g. Traffic control plans shall be approved by the traffic engineer prior to start of construction.


the Cochran Associates

#2 Holly Hill Drive
Mercer Island, WA 98040
206/232-0272


Revisions:


AKB
CONSULTING ENGINEERS
876-140th Avenue N.E. • Suite 201
BELLEVUE • WASHINGTON • 98005
(206) 747-3592 • FAX (206) 747-6481


Project Title:
**ALTERATION & ADDITION TO BOTHELL HEADQUARTERS FIRE STATION**

Sheet Title:
**STANDARD SPECIFICATIONS**

Scale: 99097
Project No.: NONE
Date:

Sheet Number:

C-3

## GRADING NOTES

1. LANDSCAPING

Existing ground cover shall be preserved unless otherwise specified on the plans. Existing trees and shrubbery shall be preserved whenever possible.

2. LOTS

All lots shall be sloped so that drainage from lots will not drain over cut or fill embankments. All lots shall be graded to a slope no greater than 1 percent in any direction except for cut and fill embankments which will be 2 H: 1 V maximum.

3. GRADING

All lots shall be graded wherever feasible so as to transport all storm water runoff from downspouts and driveways to the storm drainage system via street inlets and catch basins. This may require residential sidewalk drains per APWA Standard Plan No. 84.

a. Brush, vegetation and other debris shall be removed from areas to be graded prior to placing any fill. All ponded water shall be drained prior to any earthwork on the site.

b. Ditches shall be maintained until all disturbed areas are stabilized. Ditches disturbed during utility construction shall be restored to a workable condition as soon as is practice.

c. As soon as possible after grading is complete, all disturbed areas shall be seeded, either by hand or machine, with a mixture of 15% clover, 40% rye, 15% fescue, and 30% bluegrass at 100 lbs/acre.

## STREET, SIDEWALK, & CURB CONSTRUCTION

1. STREETS

a. The roadway section (see typical designed residential section) is a minimum requirement. Pending a soils investigation, additional subgrade material may be required. Asphalt treated base is, required for base course to a depth of 4".

b. Subgrade construction shall be in accordance with Section 15, APWA Standard Specifications. Compaction shall be to 95% of maximum density as measured in accordance with Section 13-3.10ES, APWA. Certification of subgrade compaction by an approved soils testing laboratory may be required.

c. Crushed rock top and base course per Section 23 APWA Standard Specifications. Gradation shall be as indicated on the approved construction drawings.

2. SIDEWALKS

a. The sidewalk (see typical designed residential section) shall be constructed in accordance with Section 42 APWA Standard Specifications.

b. The sidewalk's minimum thickness shall be 6". Driveway's shall also be 6". Compaction shall be to 95% of maximum density as measured in accordance with section 13-3.10 ES, A.P.W.A.

c. Wheel chair ramps to be provided where necessary per RCW Chapter 35.68.075.

d. The concrete mix for sidewalk shall be per APWA Section 37 Class 5-75 gal. and a maximum slump of 3-1/2 inches.

e. The Sidewalk Joints:

1. Control joints with joint material shall be 3/16" thickness at a maximum spacing of 15 feet.

2. Expansion joints shall be 3/4" located at driveways and as shown on APWA Standard Plan No. 14, Type "B".

3. Transverse "V" grooves shall be 1/4" deep at 5 foot centers.

4. Longitudinal "V" grooves shall be 1/2" deep between edge of sidewalk and edge of curb.

5. Sidewalks shall be given a transverse broom finish, per APWA Section 42-3.03. Driveways shall be broomed longitudinally.

3. CURBS AND GUTTERS

a. The curbs and gutters (see typical designed residential section) shall be constructed in accordance with APWA Section 40 and as shown on APWA Standard Plan No. 1, Type "A".

b. The concrete mix for curb and gutters shall be per APWA Section 37 Class 5-3/4 (1-1/4) with a water content ratio not to exceed 5.75 and a maximum slump of 3-1/2 inches.

c. The curb and gutter joints:

1. Dummy joints of not less than 3/16" thickness shall be of the same dimensions as through joints, except that they shall extend only 2" into gutter section. Dummy joints shall be placed not to exceed 15 foot spacing.

2. Expansion joints (through joints with 3/16" material) shall be placed only at points of tangency on streets, drive ways, and alley returns.

## STORM DRAINAGE CONSTRUCTION

1. STORM DRAINAGE PIPE

Concrete pipe up to and including 24" diameter shall be un-reinforced and shall conform to ASTM C-14, Table II, Extra Strength, rubber gasketed. Corrugated Aluminum Alloy Culvert Pipe shall be AASHO M-196, M-197, M-211, and M-219, Helical, gauges, and types shall be as noted on the plans. Reinforced pipe shall conform to ASTM designation C-76, unless otherwise specified.

Installations shall be in accordance with Section 63, APWA Standard Specifications and may be subject to exfiltration test.

2. OTHER MATERIALS

Other materials for Storm Drains require specific written approval of the Department of Public Works.

3. BACKFILL RESTRICTIONS

a. Minimum cover over storm drain shall be 18". For concrete roof drains tight lines this may be 12".

b. All excavation and backfill to be Class "A" per Section 51 APWA Standard Specifications. Select trench backfill, if required, shall be Class "B" per per APWA Section 13-3.10ES, shall be required wherever trench excavation is made in paved roadway, sidewalk or any other area where minor settlement would be detrimental.

## TEMPORARY EROSION/SEDIMENTATION CONTROL PLAN NOTES

1. The temporary erosion/sedimentation control facility shall be constructed prior to any grading or extensive land clearing in accordance with the approved temporary erosion/sedimentation control plan. These facilities must be satisfactorily maintained until construction and landscaping is completed and the potential for onsite erosion has passed.

2. Where possible, maintain natural vegetation for silt control.

3. Temporary siltation and detention ponds to be constructed as shown.

4. All temporary siltation and detention ponds shall be maintained in a satisfactory condition until such time that clearing and/or construction is completed and the permanent drainage facilities are operational.

5. Return siltation control areas to original condition.

6. Once work has stopped in any area stripped of vegetation, for a period not to exceed 60 days, it must be stabilized with grass or other erosion control treatment.

7. Approval of this plan does not constitute an approval of design, size nor location of pipes, restrictions, channels or retention facilities, but is an approval of temporary sedimentation plan only.

8. The shape and size of the detention pond may be modified in the field to fit the Contractor's grading operation. However, as a minimum the required storage volumes must be maintained regardless of pond shape for the contributory drainage area.

9. Contractor shall provide sufficient rip rap at each pond outfall to prevent erosion during peak flows.

10. Dispersal trenches along the utility access road and the trail to the utility access road are to be field located prior to any extensive land clearing, or grading. After field location is complete and accepted by the Owner, temporary trenches to carry runoff to the dispersal trenches shall be excavated. Temporary trenches exceeding 5% slope shall have rip rap check dams at 50' o.c.

the Cochran Associates
#2 Holly Hill Drive
Mercer Island, WA 98040
206/232-0272

Revisions:

AKB
CONSULTING ENGINEERS
875-140th Avenue N.E. • Suite 201
BELLEVUE • WASHINGTON • 98005
(206) 747-3592 • FAX (206) 747-5481

Project Title:
ALTERATION & ADDITION TO BOTHELL HEADQUARTERS FIRE STATION

Sheet Title:
STANDARD SPECIFICATIONS

Scale: NONE
Project No.: 94077
Date:

Sheet Number:
C-4

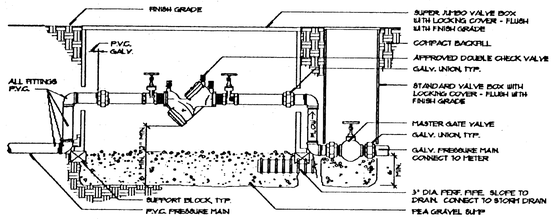


## DOUBLE CHECK VALVE ASSEMBLEY

N.T.S.

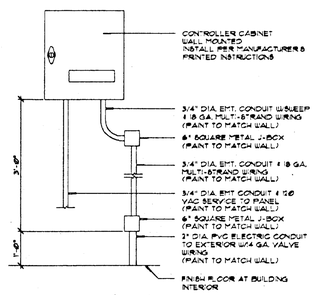


## IRRIGATION CONTROLLER

N.T.S.

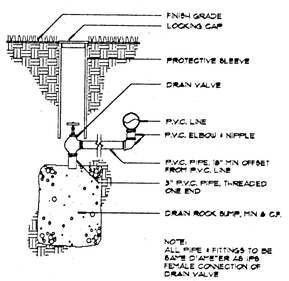


## MANUAL DRAIN VALVE ASSEMBLEY

N.T.S.

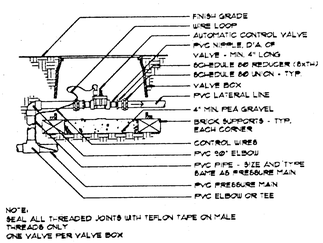


## TYPICAL AUTOMATIC CONTROL VALVE ASSEMBLEY

N.T.S.

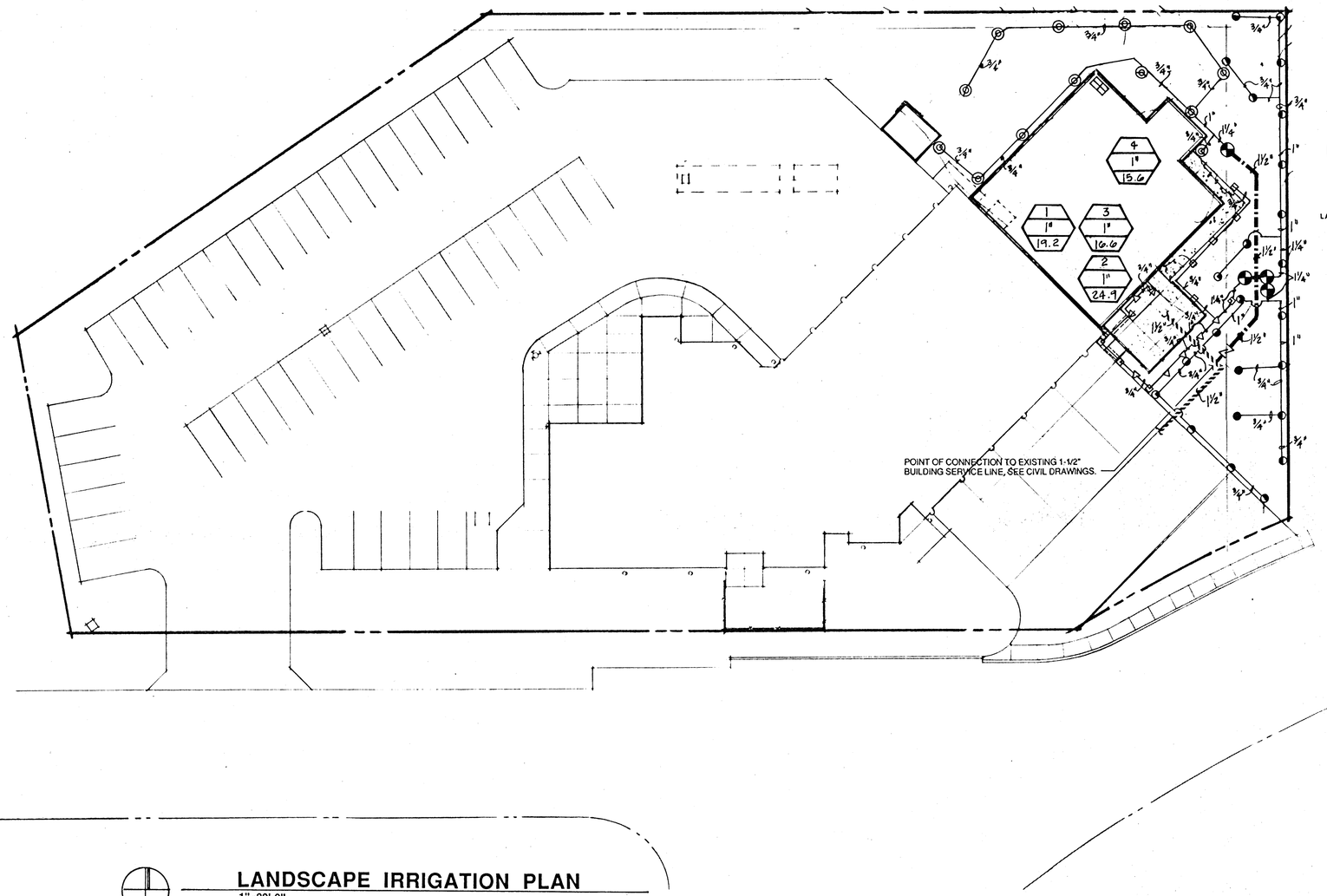


## LANDSCAPE IRRIGATION PLAN

1"=20'-0"

ALTERNATE NO. TWO

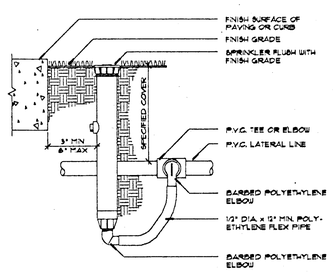


## TYPICAL FLEXIBLE RISER ASSEMBLEY

N.T.S.

## LANDSCAPE IRRIGATION SCHEDULE

| SYMBOL | MANUFACTURE / CATALOG NUMBER | DESCRIPTION |
|---|---|---|
| | RainBird T6PCT22-1.3 T6FCT22-1.3 | 6" pop-up rotor head 21' radius at 25 psi Part/Full 1.20 gpm |
| | RainBird 1804-15 | 4" pop-up spray head/standard gallonage 15' radius at 30 psi Q .93 / T 1.23 / H 1.85 / TT 2.48 / TQ 2.78 / F 3.70 gpm |
| | RainBird 1812-10 | 12" pop-up spray head/low angle 10' radius at 30 psi, Q .39 / H .79 / F 1.57 gpm |
| | RainBird 1812-15EST | 12" pop-up end strip spray head 4'x15' radius at 30 psi, .61 gpm |
| | RainBird 1812-17SST | 12" pop-up side strip spray head 9'x18' radius at 30 psi, 1.73 gpm |
| | RainBird DVF Series | Automatic control valve, in box, size as shown on drawing, one valve per box. |
| | RainBird RC-C | 4 - station irrigation controllers, wall mounted in building as shown. |
| | Febco 805Y | 3/4" double check valve backflow preventer with gate valves |
| | — | Existing 1-1/2" PVC water service to building |
| | — | Pressure mainline, p.v.c. class 200 size as noted on plan, min 18" cover, min. 24" cover under paving, with manual angle valve at low points for draining. |
| | — | Lateral line, p.v.c. class 200 / 3/4" min. size, size as noted on plan, min 12" cover, min. 18" under paving. |
| | — | Sleeving, p.v.c. class 200 / 2 times the insert pipe dia. min. size, allow space for valve wiring, min. 24" cover. |

**Typical Valve Call-Out**

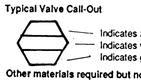


L=lawn / S=shrub

**Other materials required but not shown on drawing**

| | | |
|---|---|---|
| ---- | Mueller Stop valve | 1" bronze stop valve, install upstream of double check valve, install as detailed. |
| ---- | Champion 200 RS | 3/4" bronze manual drain valve, rising stem design, install as detailed at all low points of system to fully drain system. |

**NOTE:**
**Prior to commencement of work, verify minimum 65 psi at the point of connection. Notify Landscape Architect of any disrepancies.**


the Cochran Associates

#2 Holly Hill Drive
Mercer Island, WA 98040
206/232-0272

STATE OF WASHINGTON REGISTERED LANDSCAPE ARCHITECT

CERTIFICATE NO.

JONGEJAN · GERRARD · McNEAL
Incorporated P.S.
Landscape Architecture, Urban Design, Planning
33 102nd Ave. N.E.
Bellevue, WA 98004
206 • 454 • 3713


Revisions:

Project Title:

Additions and Alterations to:
HEADQUARTERS FIRE STATION
CITY OF BOTHELL

Sheet Title:
LANDSCAPE IRRIGATION PLAN

Scale: 1"=20'-0"
Project No.:
Date: 18 OCT 94

Sheet Number:

L-1

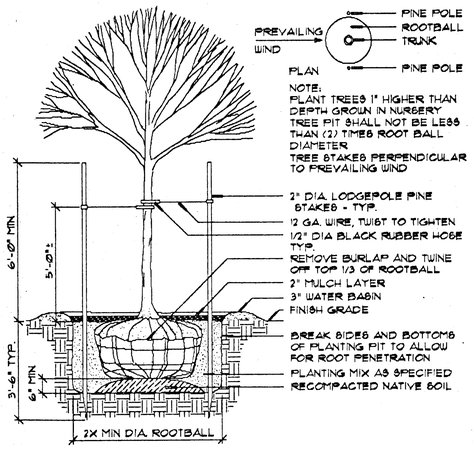


## TYPICAL DECIDUOUS TREE PLANTING / STAKING DETAIL

N.T.S.

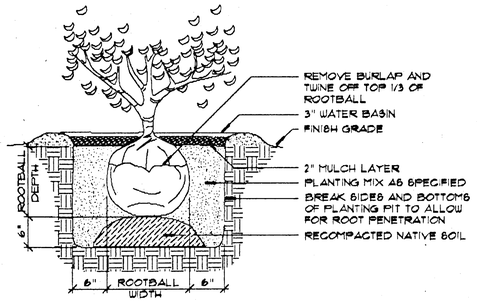


## TYPICAL SHRUB PLANTING DETAIL

N.T.S.

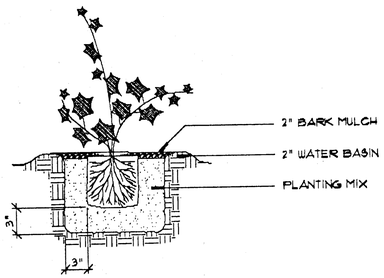


## TYPICAL TRIANGULAR PLANT SPACING DETAIL

N.T.S.

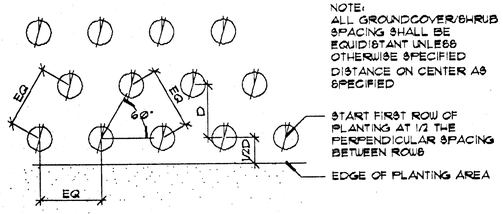


## GROUNDCOVER PLANTING DETAIL

N.T.S.

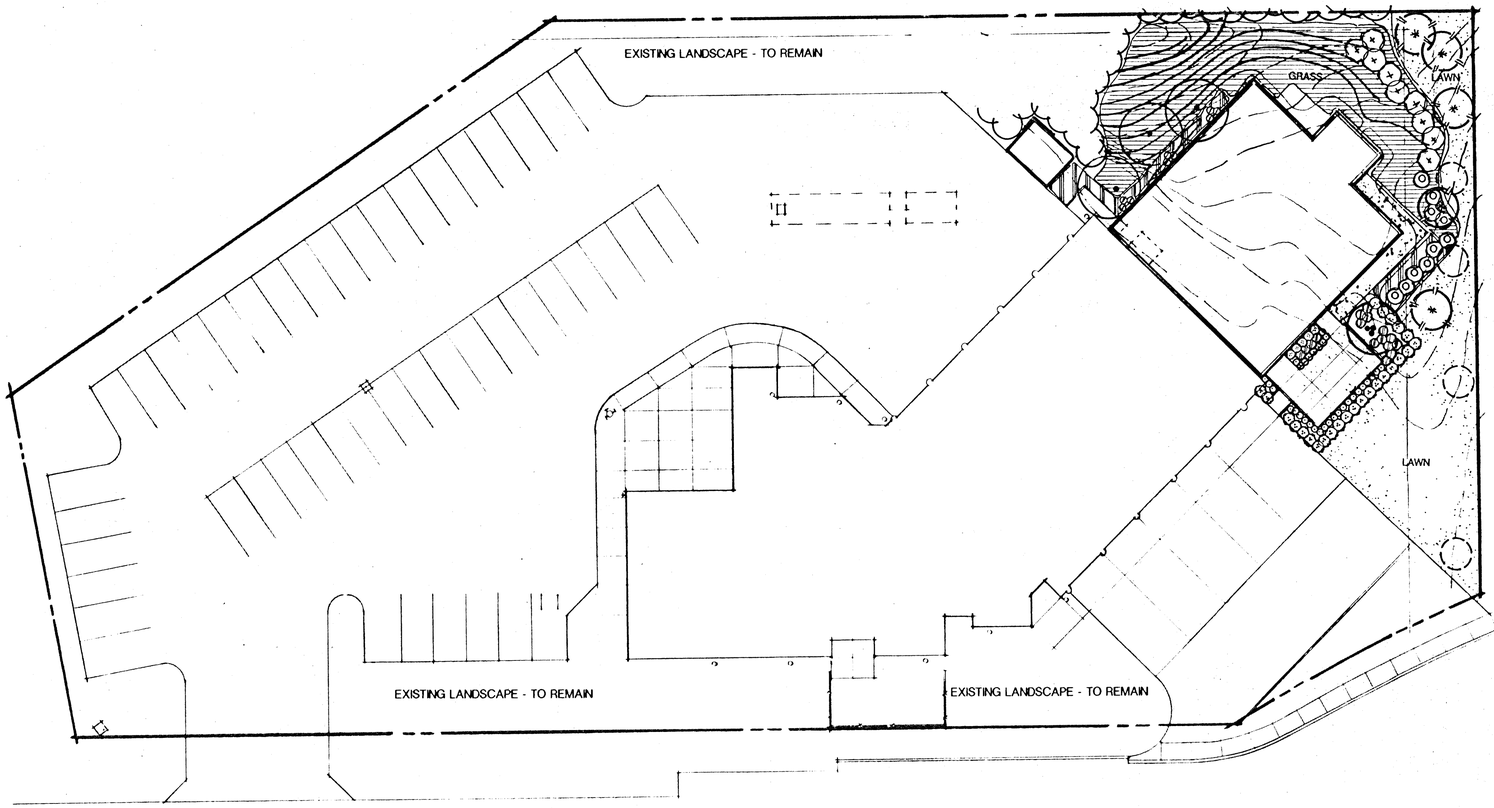


## LANDSCAPE PLANTING PLAN

1"=20'-0"

NOTE:
CONTOURS SHOWN ARE FOR REFERENCE ONLY. REFER TO CIVIL DRAWING FOR GRADING.

## LANDSCAPE PLANTING SCHEDULE

| SYMBOL | BOTANICAL NAME/COMMON NAME | SIZE | REMARKS |
|---|---|---|---|
| **Trees:** | | | |
| | Betula jacquemontii / No Common Name | 1-1/2" cal. | B&B; full, low branching, well branched |
| | Pinus nigra / Austrian Black Pine | 7'-8' ht. | B&B; full to ground, well branched |
| | Styrax obassia / Fragrant Snowbell | 1-1/2" cal. | B&B; full, multi-trunk, well branched, specimen |
| | Existing tree | – | To remain; save and protect |
| **Shrub:** | | | |
| | Arbutus unedo / Strawberry Tree | 21"-24" ht. and spread | Full to ground, hardened growth |
| | Cornus stolonifera / Redtwig Dogwood | 21"-24" ht. and spread | Full shape |
| | Daphne cneorum / Garland Daphne | 12"-15" ht. and spread | Full shape |
| | Mahonia nervosa / Longleaf Mahonia | 10"-12" ht. and spread | Full shape |
| | Nandina domestica / Heavenly Bamboo | 21"-24" ht. and spread | Full shape, 3 canes min. |
| | Nandina domestica 'Harbour Dwarf'/ Harbour Dwarf Heavenly Bamboo | 10"-12" ht. and spread | Full shape, 2 canes min. |
| | Sarcococca hookerana humilis / Low Sarcococca | 10"-12" ht. and spread | Full shape |
| | Existing vegetation | – | To remain; save and protect |

| | | | |
|---|---|---|---|
| **Groundcovers:** | | | |
| | Lawn | Seed | -- |
| | Grass | Seed | -- |
| | Rubus calycinoides / Bramble | 4" pot | Full shape, 24" o.c. triangular spacing |
| | Bark Mulch | Fine grade | 2" layer, all shrub and groundcover areas |

STATE OF WASHINGTON REGISTERED LANDSCAPE ARCHITECT

CERTIFICATE NO.


the Cochran Associates

#2 Holly Hill Drive
Mercer Island, WA 98040
206/232-0272

JONGEJAN · GERRARD · McNEAL
Incorporated P.S.
Landscape Architecture, Urban Design, Planning
22 103rd Ave. N.E.
Bellevue, WA 98004
206 · 454 · 9713


Revisions:

Project Title:

Additions and Alterations to:
HEADQUARTERS FIRE STATION
CITY OF BOTHELL

Sheet Title:
LANDSCAPE PLANTING PLAN

Scale: 1"=20'-0"
Project No.:
Date: 18 OCT 94

Sheet Number:
L-2